Digital AlphaStation 200 Series

Upgrade Information

Order Number: EK–ALPST–UP. A01

Digital Equipment Corporation
Maynard, Massachusetts

First Printing, October 1994

Digital Equipment Corporation makes no representations that the use of its products in the manner described in this publication will not infringe on existing or future patent rights, nor do the descriptions contained in this publication imply the granting of licenses to make, use, or sell equipment or software in accordance with the description.

Possession, use, or copying of the software described in this publication is authorized only pursuant to a valid written license from Digital or an authorized sublicensor.

© Digital Equipment Corporation 1994. All Rights Reserved.

The following are trademarks of Digital Equipment Corporation: Alpha AXP, AXP, DEC, DECpc, DECstation, Digital, OpenVMS, RRD42, RZ, ThinWire, TURBOchannel, ULTRIX, VAX, VAX DOCUMENT, VAXstation, the AXP logo, and the DIGITAL logo.

Motif and OSF/1 are registered trademarks of Open Software Foundation, Inc., licensed by Digital.

FCC Notice: This equipment has been tested and found to comply with the limits for a Class A digital device, pursuant to Part 15 of the FCC Rules. These limits are designed to provide reasonable protection against harmful interference when the equipment is operated in a commercial environment. This equipment generates, uses, and can radiate radio frequency energy and, if not installed and used in accordance with the instruction manual, may cause harmful interference to radio communications. Operation of this equipment in a residential area is likely to cause harmful interference, in which case users will be required to correct the interference at their own expense.

All trademarks and registered trademarks are the property of their respective holders.

S2683

This document was prepared using VAX DOCUMENT Version 2.1.

Contents

1 Options You Can Upgrade

Purpose of Guide 1–1
Options You Can Upgrade 1–1
Warning 1–2

2 Upgrading a DECpc AXP 150

Topics Covered in This Chapter 2–1
Upgrade Procedure 2–1
Step 1: If Your System Has Factory-Installed Drives 2–1
Step 2: Shut Down System 2–2
Step 3: Disconnect Cables 2–2
Step 4: Remove Outside Cover 2–3
Step 5: Remove Inside Cover 2–4
Step 6: Remove Front Peripheral Bay Bezel 2–6
Step 7: Identifying the Drive Bays 2–7
Step 8: Remove SCSI Drive from Front Drive Bay 2–8
Step 9: Remove Disk Drive from Rear Drive Bay 2–10
Step 10: Disconnect SCSI Option Board Ribbon Cables 2–12
Step 11: Remove Option Board 2–13
Step 12: Set the SCSI IDs on the Drives 2–14
Step 13: Complete the Upgrade 2–14
Step 14: Return Your System to Digital 2–14

3 Upgrading a DEC 3000 Model 300/300L/300X/300LX

Topics Covered in This Chapter 3–1
Upgrade Procedure 3–1
Step 1: If Your System Has Factory-Installed Drives 3–1
Step 2: Shut Down System 3–2
Step 3: Disconnect Cables 3–2
Step 4: Remove Cover 3–3

Step 5: Remove Fixed Disk Drives 3–4
Step 6: Set the SCSI IDs on the Drives 3–6
Step 7: Removing Memory SIMMs 3–6
Step 8: Complete the Upgrade 3–6
Step 9: Return Your System to Digital 3–6

4 Upgrading a VAXstation 4000 VLC

Topics Covered in This Chapter 4–1
Upgrade Procedure 4–1
Step 1: If Your System Has Factory-Installed Drives 4–1
Step 2: Shut Down System 4–2
Step 3: Disconnect Cables 4–2
Step 4: Remove System Cover 4–3
Step 5: Remove Disk Drive 4–4
Step 6: Set the SCSI IDs on the Drives 4–4
Step 7: Complete the Upgrade 4–5
Step 8: Return Your VAXstation to Digital 4–5

5 Upgrading a VAXstation 4000 Model 60/90/90A

Topics Covered in This Chapter 5–1
Upgrade Procedure 5–1
Step 1: If Your System Has Factory-Installed Drives 5–1
Step 2: Shut Down System 5–3
Step 3: Disconnect Cables 5–3
Step 4: Remove System Cover 5–3
Step 5: Remove H-Bracket 5–4
Step 6: Remove Drives from the H-Bracket 5–5
Step 7: Remove SPXgt Graphics Module 5–6
Step 8: Remove Removable-Media Bracket 5–8
Step 9: Remove Drive from Bracket 5–9
Step 10: Set the SCSI IDs on the Drives 5–10
Step 11: Complete the Upgrade 5–10
Step 12: Return Your VAXstation to Digital 5–10

6 Upgrading a DECstation 5000 Model 20/25/33/50

Topics Covered in This Chapter 6–1
Upgrade Procedure 6–1
Step 1: If Your System Has Factory-Installed Drives 6–1
Step 2: Shut Down System 6–2
Step 3: Disconnect Cables 6–2
Step 4: Remove Cover 6–3
Step 5: Remove Fixed Disk Drives 6–5
Step 6: Set the SCSI IDs on the Drives 6–5
Step 7: Complete the Upgrade 6–6
Step 8: Return Your DECstation to Digital 6–6

7 Upgrading a DECstation 5000 Model 120/125/133/150

Topics Covered in This Chapter 7–1
Upgrade Procedure 7–1
Step 1: If Your System Has Factory-Installed Drives 7–1
Step 2: Shut Down System 7–2
Step 3: Disconnect Cables 7–2
Step 4: Remove System Cover 7–3
Step 5: Remove Front Drive Panel 7–4
Step 6: Remove Removable Media Drives 7–5
Step 7: Remove Fixed Disk Drives 7–5
Step 8: Set the SCSI IDs on the Drives 7–6
Step 9: Complete the Upgrade 7–6
Step 10: Return Your DECstation to Digital 7–6

8 Upgrading a DECstation 5000 Model 200/240/260

Topics Covered in This Chapter 8–1
External Options Only 8–1
Upgrade Procedure 8–1
Step 1: If Your System Has Factory-Installed Drives 8–1
Step 2: Shut Down System 8–2
Step 3: Disconnect Cables 8–2
Step 4: Set the SCSI IDs on the Drives 8–3
Step 5: Complete the Upgrade 8–3
Step 6: Return Your DECstation to Digital 8–3

9 Upgrading Other Systems

No Options Can Be Upgraded 9–1
Upgrade Procedure 9–1
Step 1: Return Your System to Digital 9–1
Step 2: Update Service Contract 9–1

A SCSI ID Settings for Drives

Setting a Unique SCSI Address A–1
Selecting SCSI ADDRESS A–1
Changing the Setting A–2

Figures

1–1 Upgrade Kit Contents 1–3
2–1 Removing the Outside Cover 2–3
2–2 Removing the Inside Covers 2–5
2–3 Removing the Front Peripheral Bay Bezel 2–6
2–4 System Drive Bays 2–7
2–5 Removing a SCSI Drive from a Front Drive Bay 2–9
2–6 Removing a 3.5-Inch Drive from the Rear Drive Bay 2–11
2–7 Disconnecting the SCSI Option Board Ribbon Cables 2–12
2–8 Removing an Option Board 2–13
5–1 SPXgt 24-Plane Graphics Module 5–6
5–2 Removing the SPXgt 24-Plane Graphics Module 5–7
A–1 TZK11 Tape Drive SCSI ID Settings A–3
A–2 RRD43 Disk Drive SCSI ID Settings A–4
A–3 TLZ06/07 Tape Drive SCSI ID Settings A–5
A–4 RZ25L Fixed Disk Drive SCSI Settings A–6
A–5 RZ26L Fixed Disk Drive SCSI Settings A–7
A–6 RZ28 Fixed Disk Drive SCSI Settings A–8

1

Options You Can Upgrade

Purpose of Guide

The purpose of this guide is to tell customers and Digital Services which options can be removed from their current system and used, internally or externally, in their Digital AlphaStation 200 Series system. Step-by-step instructions are provided for removing the options.

Options You Can Upgrade

The following options can be used with the Digital AlphaStation 200 Series system:

Option	Description
Internal or External Disks	
RZ25L	535 MB 3.5" SCSI
RZ26L	1.0 GB 3.5" SCSI
RZ28	2.1 GB 3.5" SCSI
Internal or External Tape Drives/CD-ROM	
TLZ06	4 GB 4 MM DAT drive
TZK11	2.0 MB QIC tape
RRD43	600 MB CD-ROM
Memory	
MS16-BA	16MB SIMM
MS16-DA	64MB SIMM

Option	Description
Monitors	
FR-PCXAV-EC/ED	17" color
FR-PCXAV-HA/H4	21" color
VRC21-HA/H4	21" color
PCXAV-EC/ED	17" color
Expansion Boxes	
BA350	Deskside
BA353	Desktop
Other	
DETTR-BA/BB	Network Adapter

Warning

Attach an antistatic wrist strap before you begin this upgrade. As you remove options from your system, place them on an antistatic mat.

Static discharge can cause irreparable damage to options modules.

Figure 1–1 Upgrade Kit Contents

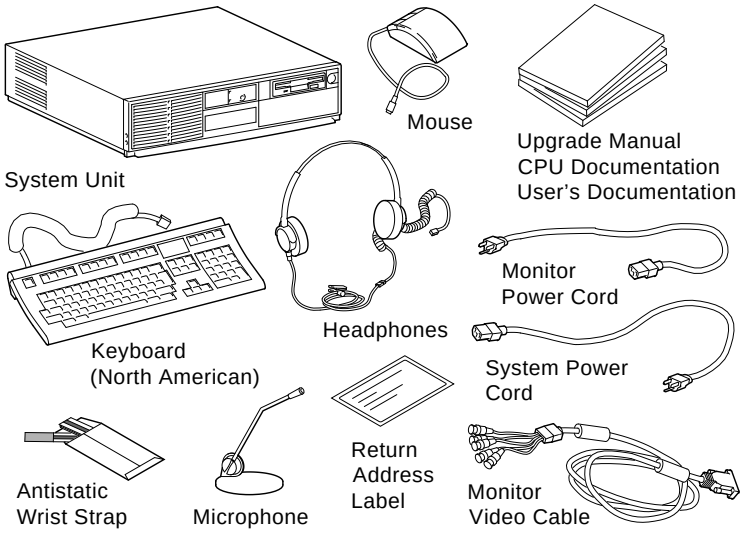

2

Upgrading a DECpc AXP 150

Topics Covered in This Chapter

- Upgrading your system
- Removing drives
- Removing modules
- Completing the upgrade

Upgrade Procedure

Step 1: If Your System Has Factory-Installed Drives

If your Digital AlphaStation 200 Series system has factory-installed drives, you may need to change the SCSI IDs on the drives you are upgrading.

To display the SCSI ID settings of the drives in your DECpc AXP 150 system:

1. Enter the command to shut down the software and put the system in console mode following the instructions in your software documentation.

2. Enter SHOW DEVICE at the console prompt (>>>). A screen similar to the following appears:

```
>>> SHOW DEVICE
 BOOTDEV     ADDR      DEVTYPE    RM/FX    DEVNAM    REV    NUMBYTES
 -------     ----      -------    -----    ------    ---    --------
 ERA0        08-00-2B-2E-2E-C3
 DVA0        PC Floppy DISK       RM
 SCSI Devices..
 DKA0        A/0/0     DISK       FX       RZ25      0700   426.25MB
 MKA200      A/2/0     TAPE       RM       TZK10     03B8   .....
 DKA400      A/4/0     RODISK     RM       RRD42     4.5d   .....
 HOST        A/5/0     PROC                AHA1742A  G
```

This sample display shows an RZ25 drive set to SCSI ID 0, a TZK10 drive set to SCSI ID 2, and an RRD42 drive set to SCSI ID 4.

Write down the names of your system drives and SCSI ID settings here. You will need them for future use.

Step 2: Shut Down System

Turn off the system unit by pressing O on the On/Off switch on the front of the system unit.

Caution: After you turn off the system, wait 15 seconds before you unplug the power cord.

Step 3: Disconnect Cables

To disconnect the cables:

Step	Action
1	Disconnect all the cables from the back of the system unit.
2	Disconnect the power cord from the wall outlet and then from the system unit.

Step 4: Remove Outside Cover

To remove the outside cover:

Step	Action
1	Unlock the outside cover using the chassis key ❶.
2	Loosen the two captive screws ❷.
3	Slide the outside cover towards the rear of the system unit and remove it.

Figure 2–1 Removing the Outside Cover

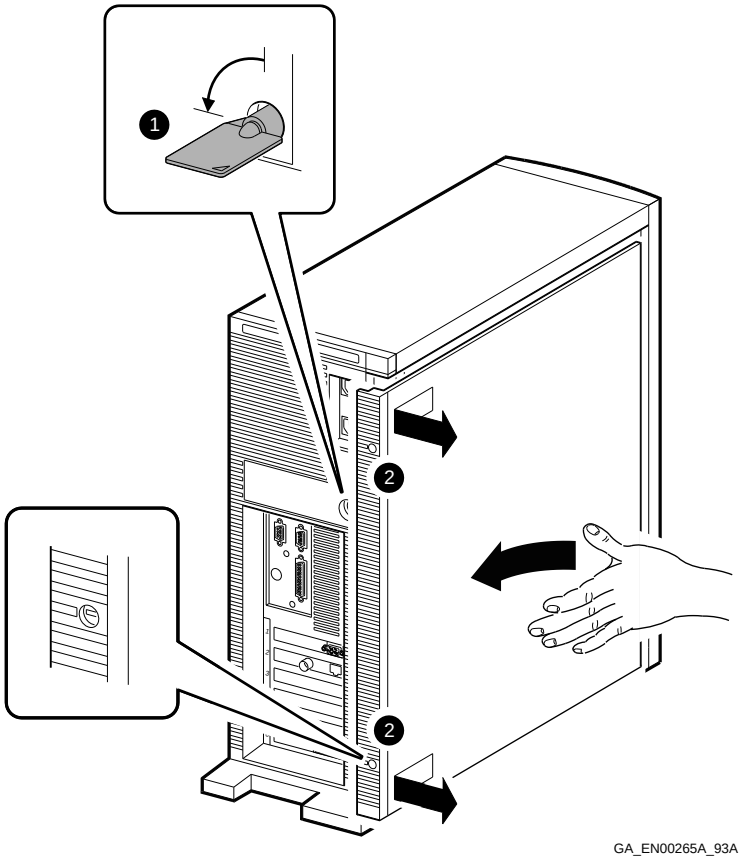

Step 5: Remove Inside Cover

Note that the peripheral bay cover ❶ may not be installed in your system. It is installed only in older systems.

To remove the inside cover:

Step	Action
1	Remove the inside peripheral bay cover by inserting your finger into the circular hole ❷ and lifting the cover out.
2	Remove the two screws ❸ securing the large inside cover to the chassis. Keep the screws in a safe place.
3	Insert your finger into the circular holes ❹ on the larger inside cover, then slide it towards the front of the system unit and remove it.

Figure 2–2 Removing the Inside Covers

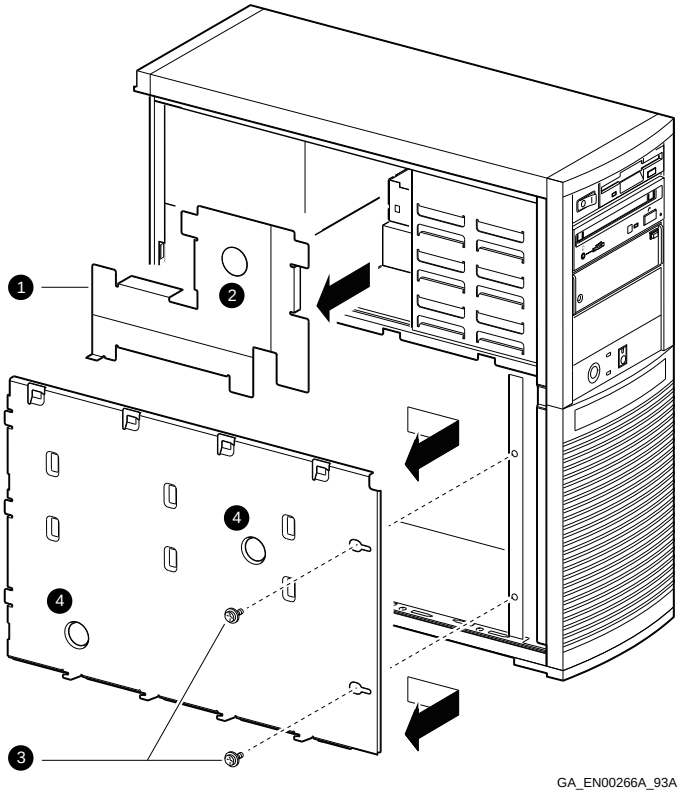

Step 6: Remove Front Peripheral Bay Bezel

To remove the front peripheral bay bezel:

Step	Action
1	Pull the bezel locking-latch ❶ out until it stops.
2	Lift the front peripheral bay bezel from the bottom and then lift it out and off its hinges ❷.

Figure 2–3 Removing the Front Peripheral Bay Bezel

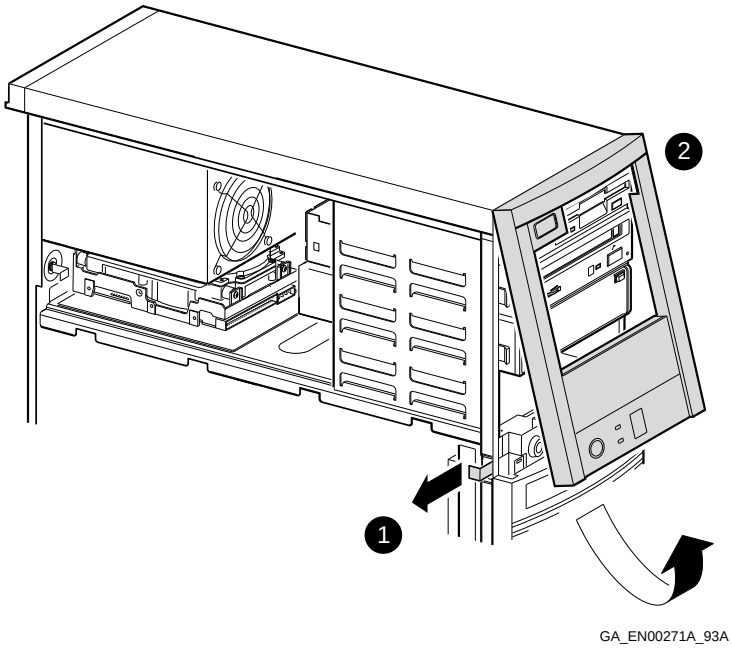

Step 7: Identifying the Drive Bays

The following section describes how to identify the drive bays inside the system unit.

Item	Description
❶	Front diskette drive bay–Accepts 3.5-inch diskette drives
❷	Front 5.25-inch drive bays–Accepts 5.25-inch removable media devices or 3.5-inch disk drive devices
❸	Rear disk drive bay–Accepts 3.5-inch disk drives

Figure 2–4 System Drive Bays

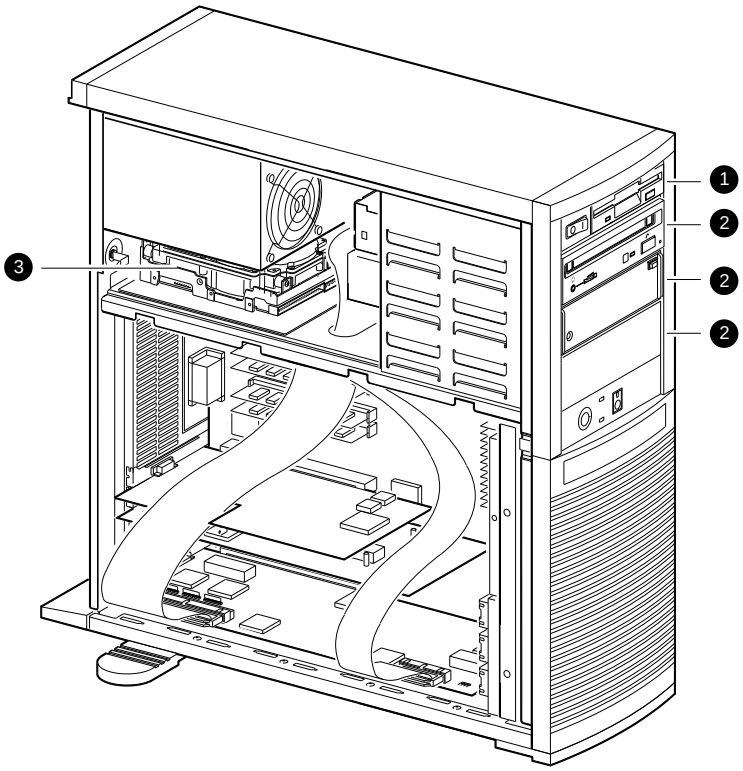

GA_EN00270A_93A

Step 8: Remove SCSI Drive from Front Drive Bay

To remove the SCSI drive from the front drive bay:

Step	Action
1	Disconnect the power cable ❶ and the data cable ❷ from the back of the drive.
2	Use a flat-head screwdriver ❸ to free the locking clips from the slots on the side of the drive bay.
3	Slide the drive forward and remove it from the drive bay.
4	Unscrew the extension brackets (3.5-inch drives only), slide rails, and grounding clips from the drive.

Figure 2–5 Removing a SCSI Drive from a Front Drive Bay

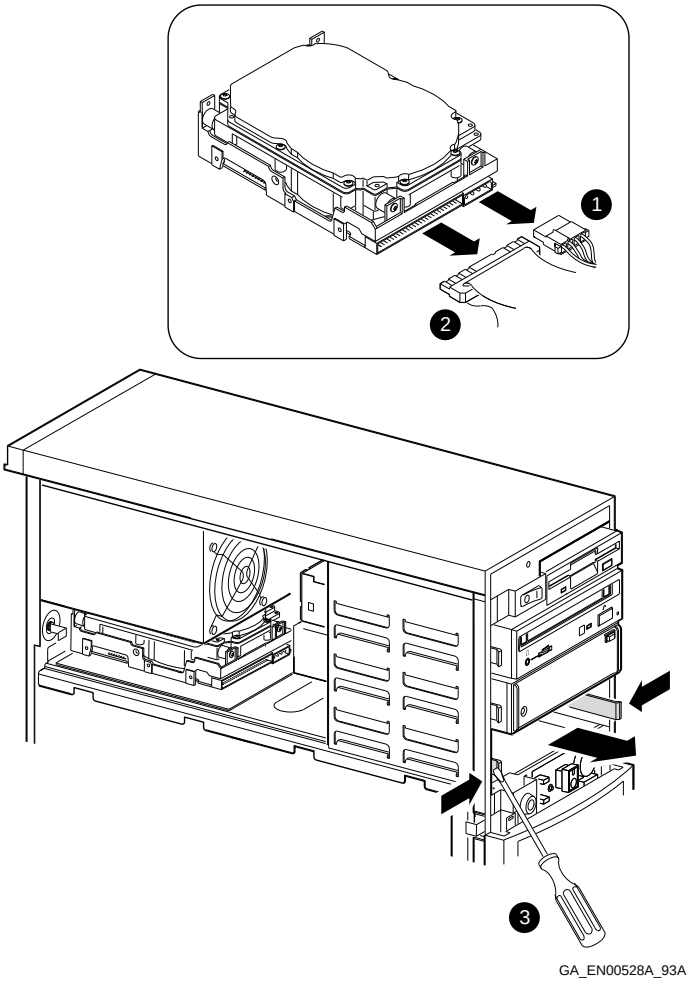

Step 9: Remove Disk Drive from Rear Drive Bay

To remove a disk drive from the rear drive bay:

Step	Action
1	Disconnect the power cable ❶ and the data cable ❷ from the back of the drive.
2	Use a flat-head screwdriver to unscrew the captive screw ❸ securing the drive mounting bracket, if present, to the chassis.
3	Slide the drive forward to free the mounting bracket clips, if present, from their slots, then lift it and remove it from the drive bay.
4	Remove the disk drive from the mounting bracket or the chassis by unscrewing the screws.

Figure 2–6 Removing a 3.5-Inch Drive from the Rear Drive Bay

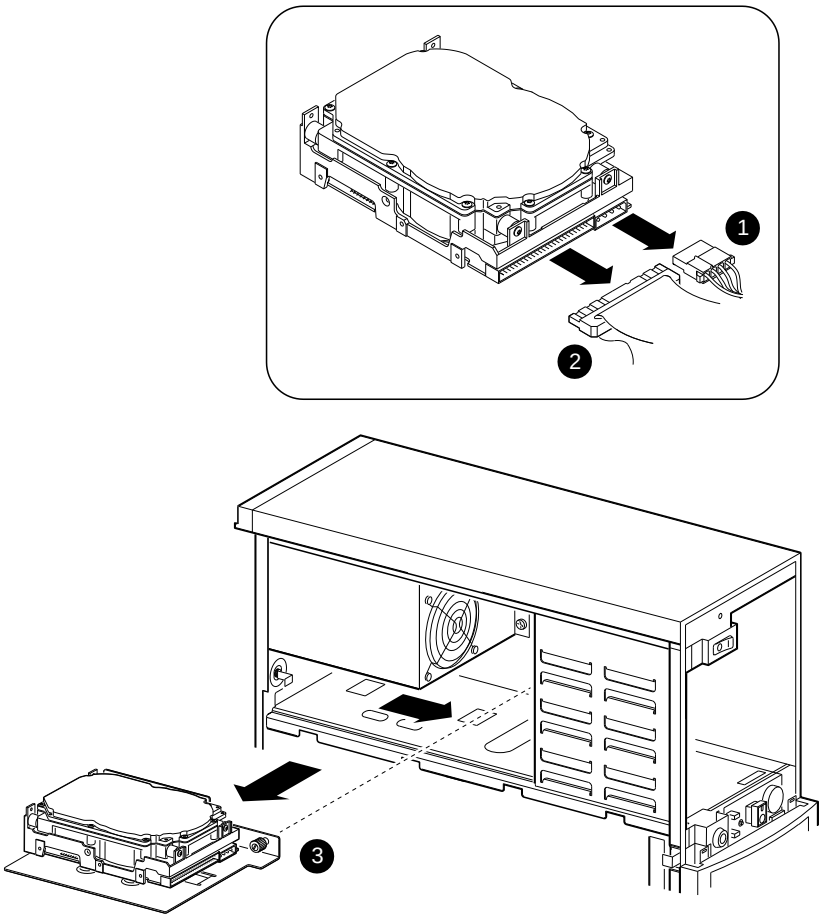

Step 10: Disconnect SCSI Option Board Ribbon Cables

To remove the SCSI option board ribbon cables:

Step	Action
1	Disconnect the larger ribbon cable ❶ and place it aside.
2	Disconnect the smaller ribbon cable ❷ and place it aside.

Figure 2–7 Disconnecting the SCSI Option Board Ribbon Cables

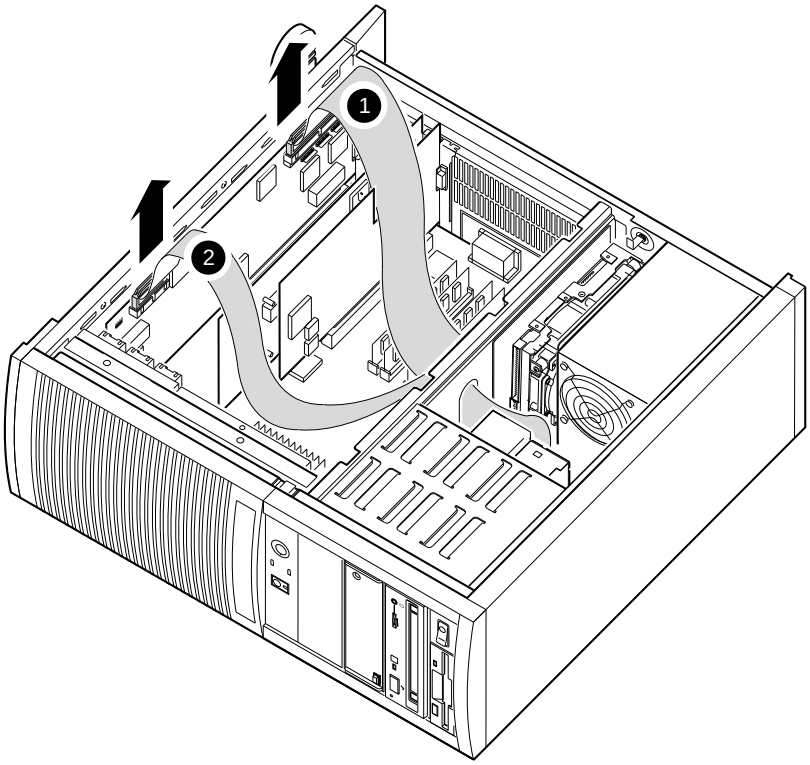

GA_EN00267A_93A

Step 11: Remove Option Board

To remove an option board:

Step	Action
1	Remove the screw ❶ securing the option board to the chassis.
2	Carefully disconnect the option board from the connectors on the system module and remove it from the system.

Figure 2–8 Removing an Option Board

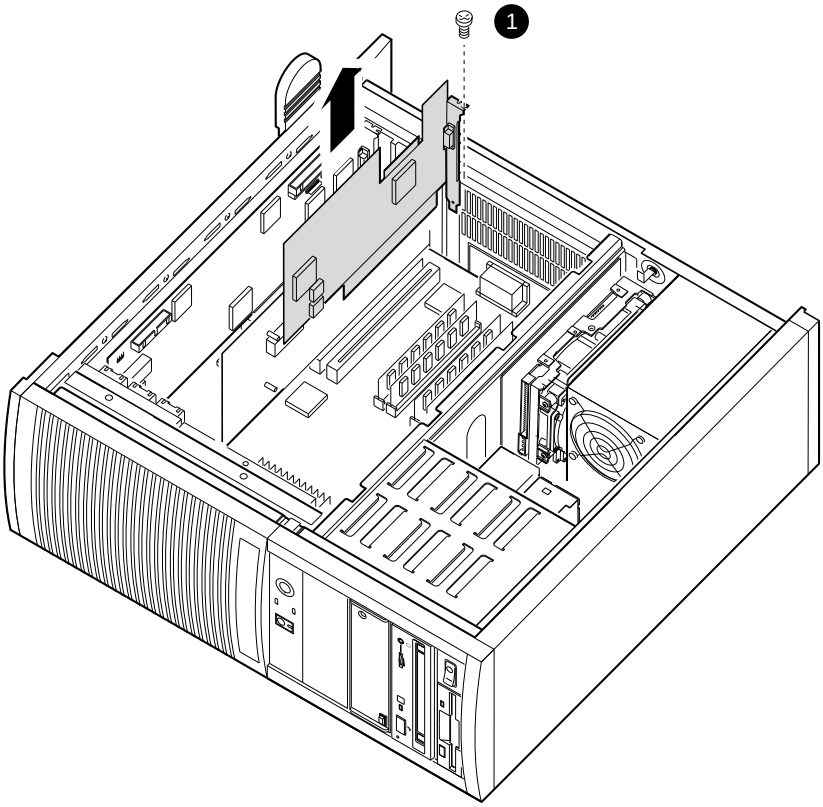

Step 12: Set the SCSI IDs on the Drives

If your Digital AlphaStation 200 Series system has a factory-installed disk drive, it is set to SCSI ID 0. Check the SCSI ID settings you noted earlier. If one of the drives you are upgrading is also set to SCSI ID 0, change that setting.

SCSI ID settings can be found in Appendix A.

Step 13: Complete the Upgrade

To complete the upgrade:

Step	Action
1	Follow the instructions in the *Digital AlphaStation 200 Series User Information* manual to install the options you have removed from your system and to complete the upgrade.
2	Update the customer service contract to the Digital AlphaStation 200 Series system.

Step 14: Return Your System to Digital

To return your system and any options that are not upgradeable to Digital:

Step	Action
1	Pack the system and options securely in packing material.
2	Attach the return-address label that was in your upgrade kit, and ship the package to Digital.

3

Upgrading a DEC 3000 Model 300/300L/300X/300LX

Topics Covered in This Chapter

- Upgrading your system
- Removing drives
- Removing memory SIMMs
- Completing the upgrade

Upgrade Procedure

Step 1: If Your System Has Factory-Installed Drives

If your AlphaStation 200 Series system has factory-installed drives, you may need to change the SCSI IDs on the drives you are upgrading.

To display the SCSI ID settings of the drives in your system:

1. Enter the command to shut down the software and put the system in console mode as described in your software documentation.

2. Enter `show device` at the console prompt (>>>). A screen similar to the following appears:

```
>>> show device

BOOTDEV ADDR DEVTYPE NUMBYTES RM/FX WP DEVNAM  REV

ESA0 08-00-2B-2F-F8-E6, TENBT
DKA3000 A/3/0 DISK     535MB    FX     RZ25L   0900
.HOSTID.A/7   INITR
>>>
```

This sample display shows an RZ25L drive set to SCSI ID 3.

Write down the names of your system drives and SCSI ID settings here. You will need them for future use.

Step 2: Shut Down System

Turn off the system unit by pressing O on the On/Off switch on the back of the system unit.

Caution: After you turn off the system, wait 15 seconds before you unplug the power cord.

Step 3: Disconnect Cables

Disconnect all the cables from the back of the system unit.

Disconnect the power cord from the wall outlet and then from the system unit.

Step 4: Remove Cover

1. Remove the two Phillips screws on the right and left top corners of the system unit cover.
2. Place the system unit so that the back of the unit extends over the edge of a table or desk.
3. Place your thumbs on top of the two black rubber caps on the back of the system unit, and place your fingers under the cover's bottom edge. Press with your thumbs, and, at the same time, pull up with your fingers to lift the cover.

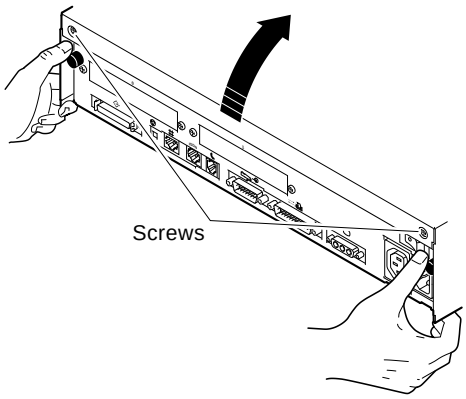

MLO-010720

Hint: If you have difficulty opening the enclosure, you can use a tool to pry up the cover as shown here.

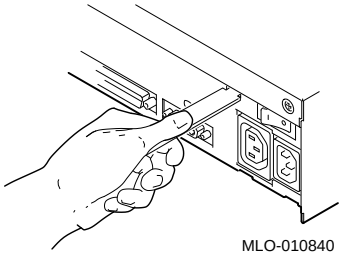

4. Pivot the cover on the tabs that run along the system unit's front edge.
5. Push the system unit cover forward and away until it releases from the tabs.
6. Place the cover aside.

Step 5: Remove Fixed Disk Drives

1. Unlock the sliding latch from the locking post.
2. Disconnect the internal power and SCSI cables from the rear of the drive.
3. Lift the drive off the locking post and out of the chassis cutouts.

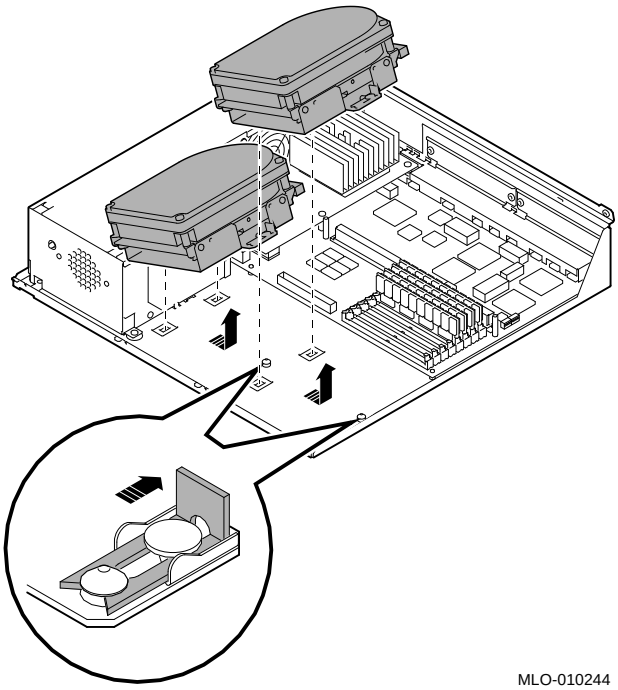

MLO-010244

4. Remove the drive mounting bracket by removing the four screws that secure the mounting bracket to the drive.

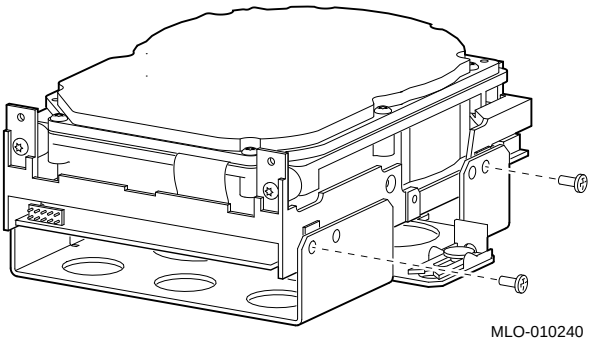

MLO-010240

5. Set the drives aside on an antistatic mat.
6. Put all the disconnected cables back into the system unit.

Step 6: Set the SCSI IDs on the Drives

If your AlphaStation 200 Series system has a factory-installed disk drive, it is set to SCSI ID 0. Check the SCSI ID settings you noted earlier. If one of the drives you are upgrading is also set to SCSI ID 0, change that setting.

Settings for drives can be found in Appendix A.

Step 7: Removing Memory SIMMs

If you plan to remove the memory SIMMs from your current system and install them in your Digital AlphaStation 200 Series system, refer to the DEC 3000 Model 300 documentation for instructions.

Step 8: Complete the Upgrade

1. Instructions for installing options that you have removed from your system and completing the upgrade can be found in the *AlphaStation 200 Series User Information*.
2. Update the customer service contract to the AlphaStation 200 Series system.

Step 9: Return Your System to Digital

To return your system and any options that are not upgradeable to Digital:

1. Pack the system and options securely in packing material.
2. Attach the return-address label that was in your upgrade kit, and ship the package to Digital.

4

Upgrading a VAXstation 4000 VLC

Topics Covered in This Chapter

- Upgrading your system
- Removing drives
- Completing the upgrade

Upgrade Procedure

Step 1: If Your System Has Factory-Installed Drives

If your Digital AlphaStation 200 Series system has factory-installed drives, you may need to change the SCSI IDs on the drives you are upgrading.

To determine the SCSI ID settings on your drives, follow these steps:

1. Shut down your system software following the instructions in your software documentation.
2. To show the drives and their SCSI ID settings, enter:
   `>> SHOW CONFIG`

A screen similar to the following appears:

```
>>> SHOW CONFIG

KA48-A V1.3-343-V4.0
08-00-2B-1D-28-6C
8MB

DEVNBR  DEVNAM   INFO
------  ------   --------------------------------
  1      NVR      OK
  2      LCG      OK
                   LR - 8 PLN FB - 5.2
  3      DZ       OK
  4      CACHE    OK
  5      MEM      OK
                   8MB = S0/1=0MB, S2/3=0MB, S4/5=0MB
  6      FPU      OK
  7      IT       OK
  8      SYS      OK
  9      NI       OK
 10      SCSI     OK
                  5-RX26   6-INITR
 11      AUD      OK
>>>
```

SCSI
ID Numbers

MLO-010730

This sample display shows an RX26 drive set to SCSI ID 5.

Write down your system drives and SCSI ID settings here. You will need them for future use.

Step 2: Shut Down System

Turn off the system unit by pressing O on the On/Off switch on the side of the system unit.

Caution: After you turn off the system, wait 15 seconds before unplugging the power cord.

Step 3: Disconnect Cables

Disconnect all the cables from the back of the system unit.

Disconnect the power cord from the wall outlet and then from the system unit.

Step 4: Remove System Cover

1. Press firmly on the latches located on the side of the system unit.
2. Push the latches in and up until the cover releases.
3. Pull the cover up and off.

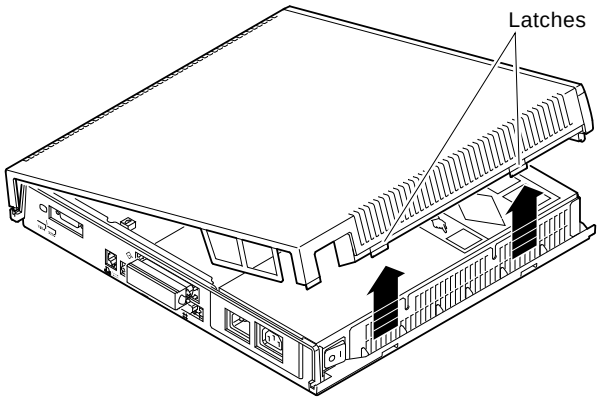

MLO-010695

Step 5: Remove Disk Drive

1. Locate the small metal clip attached to the disk mounting bracket.
2. Push in on the metal clip to unlock the bracket, then slide the drive away from the power supply to remove it from the system unit.
3. Disconnect the SCSI and power cables from the drive.
4. Remove the drive mounting bracket and clip by removing the four screws that secure the mounting bracket to the drive.

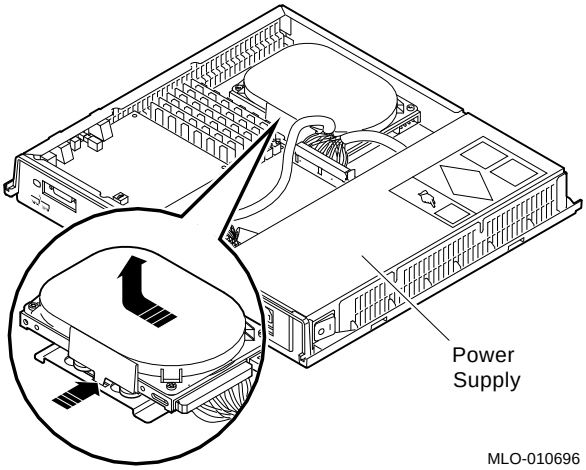

Step 6: Set the SCSI IDs on the Drives

If your Digital AlphaStation 200 Series system has a factory-installed disk drive, it is set to SCSI ID 0. Check the SCSI ID settings you noted earlier. If one of the drives you are upgrading is also set to SCSI ID 0, change that setting.

SCSI ID settings for drives can be found in Appendix A.

Step 7: Complete the Upgrade

1. Instructions for installing options that you have removed from your VAXstation VLC and completing the upgrade can be found in the *Digital AlphaStation 200 Series User Information*.
2. Update the customer service contract to the Digital AlphaStation 200 Series system.

Step 8: Return Your VAXstation to Digital

To return your VAXstation and any options that are not upgradeable to Digital:

1. Pack the VAXstation and options securely in packing material.
2. Attach the return-address label that was in your upgrade kit, and ship the package to Digital.

5

Upgrading a VAXstation 4000 Model 60/90/90A

Topics Covered in This Chapter

- Upgrading your system
- Removing drives
- Completing the upgrade

Upgrade Procedure

Step 1: If Your System Has Factory-Installed Drives

If your Digital AlphaStation 200 Series system has factory-installed drives, you may need to change the SCSI IDs on the drives you are upgrading.

To determine the SCSI ID settings on your drives:

1. Shut down your software following the instructions in your software documentation.
2. Put the VAXstation into console mode by pressing the Halt button located behind the door on the front of the system unit.
3. Enter the `SHOW CONFIG` command.

A screen similar to the following appears:

```
>>> show config
KN4n-A Vn.n
08-00-2B-0A-7D-CB
32 MB

DEVNBR DEVNAM  INFO
-------------------------------------
1 NVR  OK
2 LCSPX  OK
.
.
10 SCSI  0-RZ24  3-RZ25
```

This sample display shows an RZ24 drive set to SCSI ID 0 and RZ25 drive set to SCSI ID 3.

Write down your system drives and SCSI ID settings here. You will need them for future use.

Step 2: Shut Down System

Turn off the system unit by pressing O on the On/Off switch on the front of the system unit.

Caution: After you turn off the system, wait 15 seconds before unplugging the power cord.

Step 3: Disconnect Cables

Disconnect all the cables from the back of the system unit.

Disconnect the power cord from the wall outlet and then from the system unit.

Step 4: Remove System Cover

Release the latches on the right side. Then pull the cover up and away. You need to pull forcefully to release the retention devices.

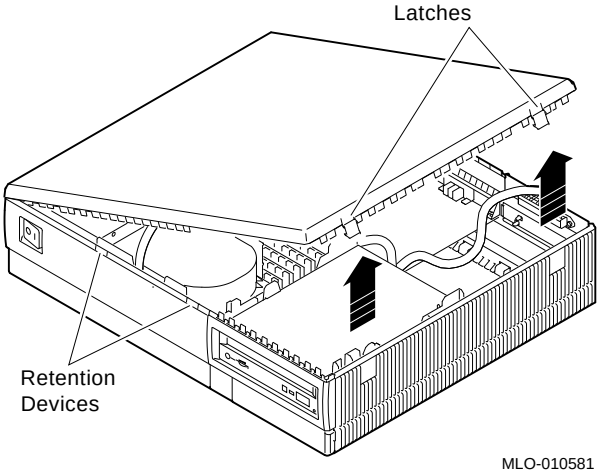

Step 5: Remove H-Bracket

To remove the H-bracket from the VAXstation system unit:

1. Push in on the cantilever catch on the bracket (as shown) and lift the bracket straight up with the strap handle.

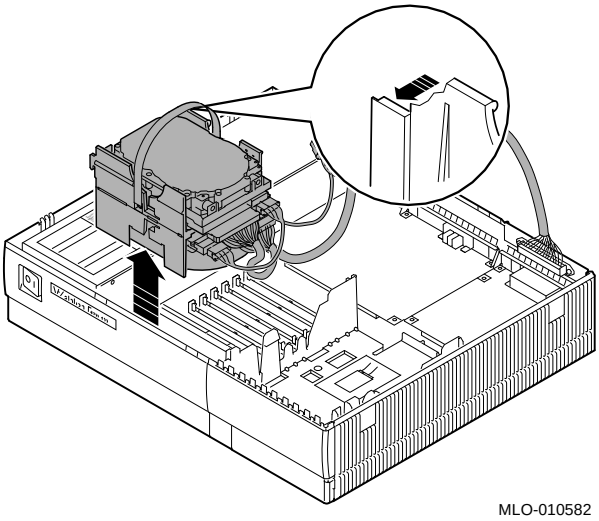

2. Disconnect the SCSI and power cables from the drives in the bracket.

Step 6: Remove Drives from the H-Bracket

To remove a drive from the H-bracket:

1. Press down on the latch on the front of the bracket.
2. Slide the drive forward until you can pull it up and out of the bracket.

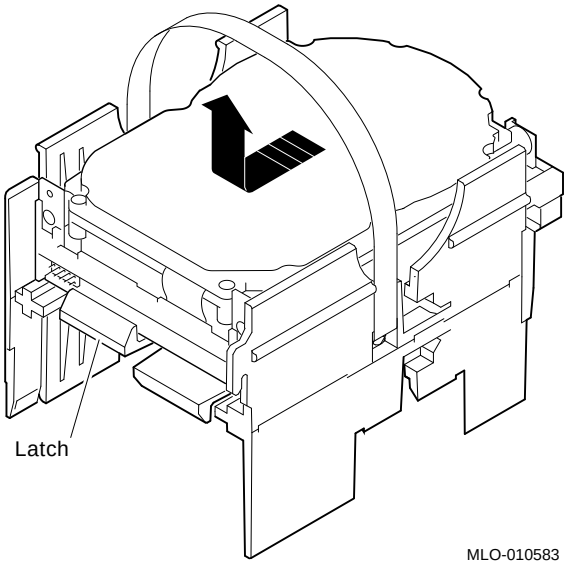

3. Set the drive aside on an antistatic mat.

Step 7: Remove SPXgt Graphics Module

If your system has an SPXgt graphics module, you must remove it before you can remove the removable-media device from the system unit. If you do not have an SPXgt graphics module, go to Step 8.

Figure 5–1 SPXgt 24-Plane Graphics Module

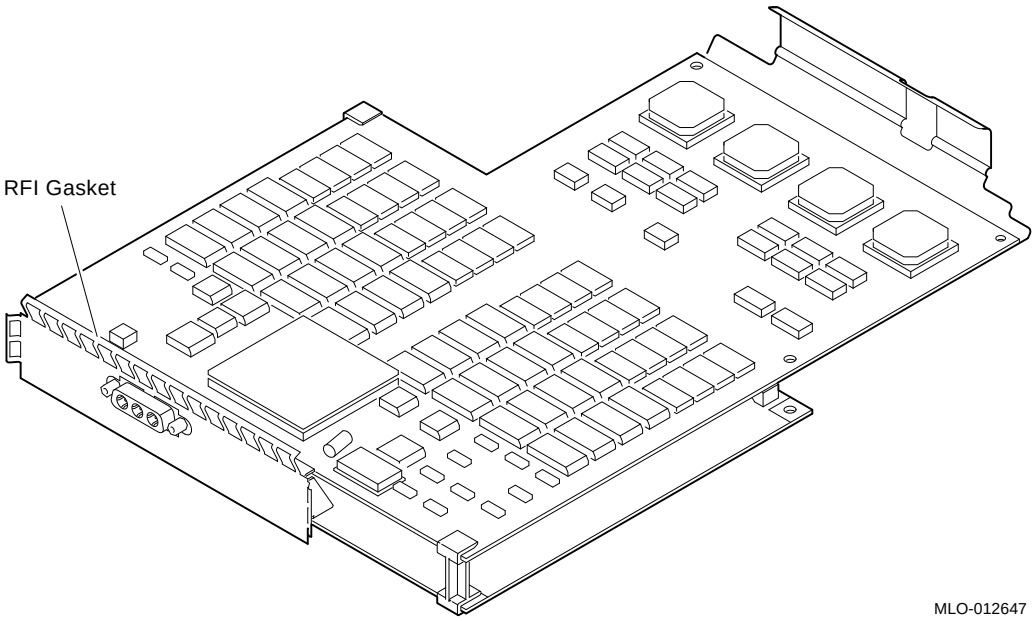

To remove the graphics module:

1. Remove the plastic E-clip ❶ that holds the graphics module to the frame buffer. (See Figure 5–2).
2. Lift the frame buffer from the center connector ❷, then free it from the ridge ❸ on the disk drive H-bracket. Gently work the frame buffer free by pulling up from the center of the module.
3. Pull the frame buffer out of the RFI gasket (shown in Figure 5–1). The gasket will remain in place, held by the video connector bracket on the graphics module.

Figure 5–2 Removing the SPXgt 24-Plane Graphics Module

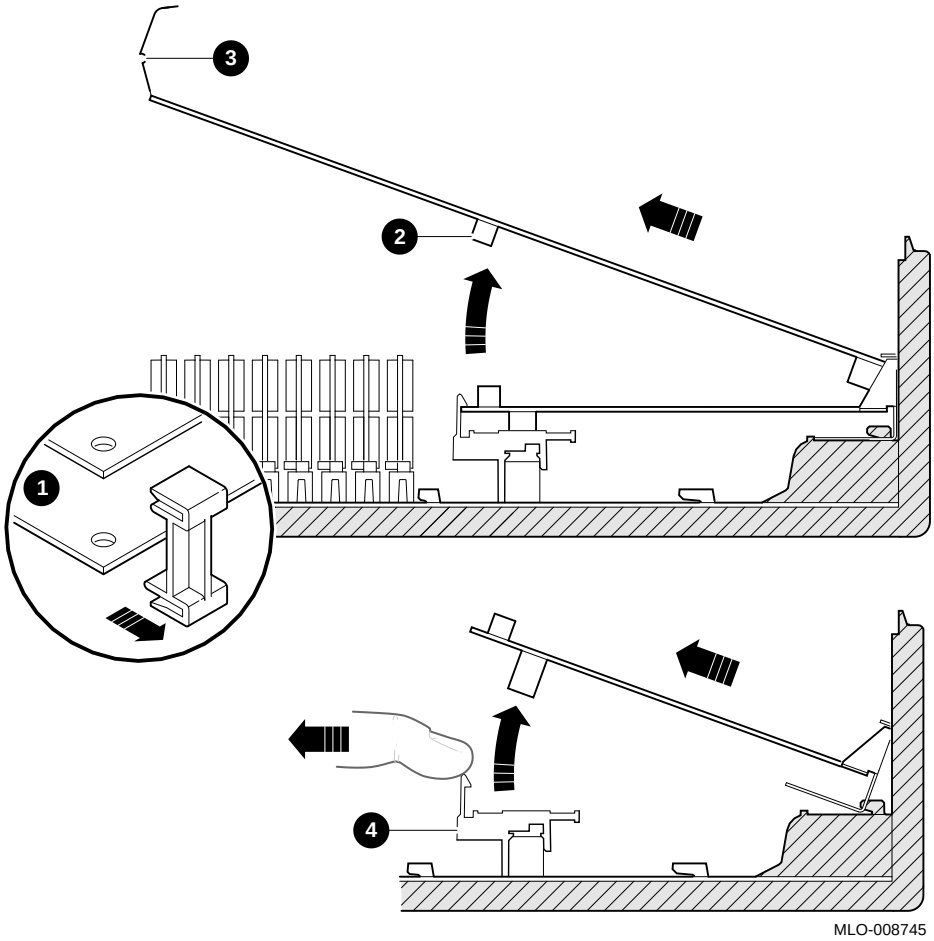

Step 8: Remove Removable-Media Bracket

To remove the removable-media bracket:

1. Disconnect the SCSI and power cables from the removable-media drive.
2. Push down the latch on the rear of the drive bracket and push the drive back until the front bezel clears the bezel opening in the system unit.

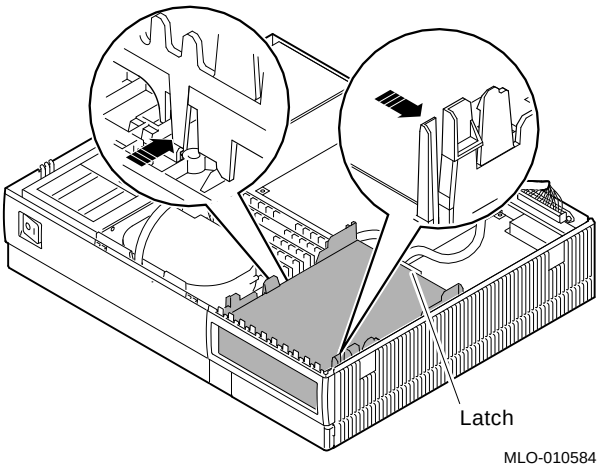

3. Release the two cantilever catches (shown) on the removable-media bracket and lift the bracket out of the system unit.

Step 9: Remove Drive from Bracket

To remove the drive from the bracket:

1. Hold down the locking latch and push the drive back to loosen it.
2. Spread apart the cantilever latches on the bracket and lift the drive out.

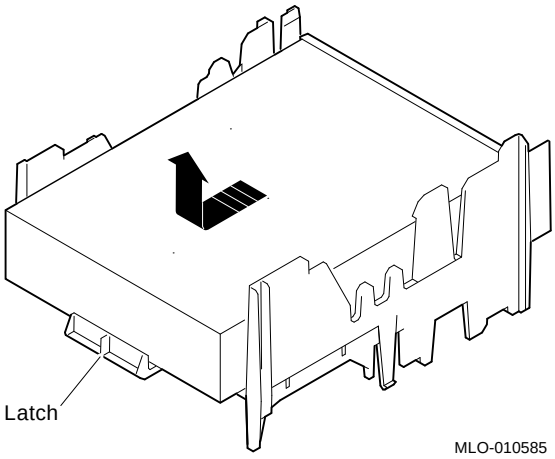

3. Set the drive aside on an antistatic mat.

Step 10: Set the SCSI IDs on the Drives

If your Digital AlphaStation 200 Series system has a factory-installed disk drive, it is set to SCSI ID 0. Check the SCSI ID settings you noted earlier. If one of the drives you are upgrading is also set to SCSI ID 0, change that setting.

SCSI-ID settings for drives can be found in Appendix A.

Step 11: Complete the Upgrade

1. Instructions for installing options that you have removed from your VAXstation and completing the upgrade can be found in the *Digital AlphaStation 200 Series User Information*.
2. Update the customer service contract to the Digital AlphaStation 200 Series.

Step 12: Return Your VAXstation to Digital

To return your VAXstation and any options that are not upgradeable to Digital:

1. Pack the VAXstation and options securely in packing material.
2. Attach the return-address label that was in your upgrade kit and ship the package to Digital.

6

Upgrading a DECstation 5000 Model 20/25/33/50

Topics Covered in This Chapter

- Upgrading your system
- Removing drives
- Completing the upgrade

Upgrade Procedure

Step 1: If Your System Has Factory-Installed Drives

If your Digital AlphaStation 200 Series system has factory-installed drives, you may need to change the SCSI IDs on the drives you are upgrading.

To display the SCSI ID settings of the drives in your DECstation:

1. Enter the command to shut down the software and put the system in console mode: `shutdown -h now`

2. Enter `cnfg 3` at the console prompt (>>>). A screen similar to the following appears:

```
>>> cnfg 3

3:      KNO2   DEC   Vn.n    TCF0              (12 MB)
-----------------------------------------------------
        DEV    PID       VID    REV     SCSI ID
-----------------------------------------------------
        rz2    RZ24  (C) DEC    0700   DIR
        rz5    RX26  (C) DEC    0700   SEQ
```

This sample display shows an RZ24 drive set to SCSI ID 2 and an RX26 drive set to SCSI ID 5.

Write down the names of your system drives and SCSI ID settings here. You will need them for future use.

Step 2: Shut Down System

Turn off the system unit by pressing O on the On/Off switch on the back of the system unit.

Caution: After you turn off the system, wait 15 seconds before you unplug the power cord.

Step 3: Disconnect Cables

Disconnect all the cables from the back of the system unit.

Disconnect the power cord from the wall outlet and then from the system unit.

Step 4: Remove Cover

1. Remove the two Phillips screws on the right and left top corners of the system unit cover.
2. Place the system unit so that the back of the unit extends over the edge of a table or desk.
3. Place your thumbs on top of the two black rubber caps on the back of the system unit, and place your fingers under the cover's bottom edge. Press with your thumbs, and, at the same time, pull up with your fingers to lift the cover.

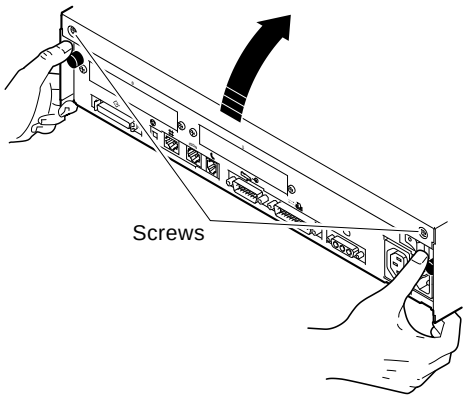

MLO-010720

Hint: If you have difficulty opening the enclosure, you can use a tool to pry up the cover as shown here.

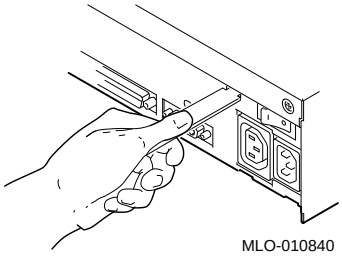

4. Pivot the cover on the tabs that run along the system unit's front edge.
5. Push the system unit cover forward and away until it releases from the tabs.
6. Place the cover aside.

Step 5: Remove Fixed Disk Drives

1. Disconnect the drive SCSI and power cables from the system module.
2. Press down on the disk drive and unlock the sliding latch from the locking post.
3. Lift the drive off the locking post and out of the chassis cutouts.

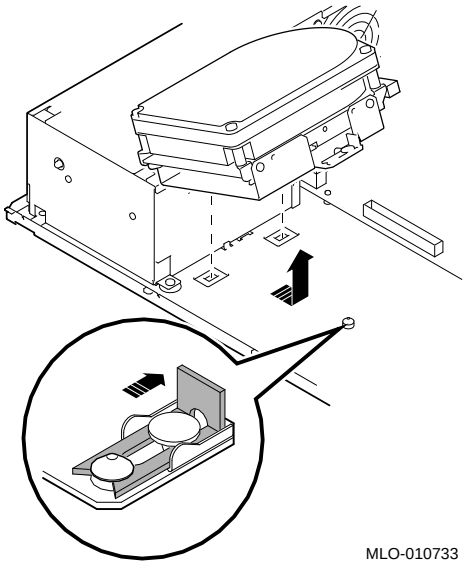

4. Disconnect the power and SCSI cables from the drive.
5. Remove the drive mounting bracket by removing the four screws that secure the mounting bracket to the drive.
6. Set the drives aside on an antistatic mat.
7. Put all the disconnected cables back into the system unit.

Step 6: Set the SCSI IDs on the Drives

If your Digital AlphaStation 200 Series system has a factory-installed disk drive, it is set to SCSI ID 0. Check the SCSI ID settings you noted earlier. If one of the drives you are upgrading is also set to SCSI ID 0, change that setting.

SCSI ID settings for drives can be found in Appendix A.

Step 7: Complete the Upgrade

1. Instructions for installing options that you have removed from your DECstation and completing the upgrade can be found in the *Digital AlphaStation 200 Series User Information*.
2. Update the customer service contract to the Digital AlphaStation 200 Series system.

Step 8: Return Your DECstation to Digital

To return your DECstation and any options that are not upgradeable to Digital:

1. Pack the DECstation and options securely in packing material.
2. Attach the return-address label that was in your upgrade kit, and ship the package to Digital.

7

Upgrading a DECstation 5000 Model 120/125/133/150

Topics Covered in This Chapter

- Upgrading your system
- Removing drives
- Completing the upgrade

Upgrade Procedure

Step 1: If Your System Has Factory-Installed Drives

If your Digital AlphaStation 200 Series system has factory-installed drives, you may need to change the SCSI IDs on the drives you are upgrading.

To display the SCSI ID settings of the drives in your system:

1. Enter the command to shut down the software and put the system in console mode: `shutdown -h now`

2. Enter `cnfg 3` at the console prompt (>>>). A screen similar to the following appears:

```
>>> cnfg 3

3: KNO2   DEC   Vn.n    TCF0  (8 MB)
                            (enet:  08-00-2b-30-14-df)
                                            (SCSI = 7)

-----------------------------------------------------
        DEV    PID       VID    REV     SCSI ID
-----------------------------------------------------
 rz2    RZ24  (C) DEC DEC 0700   DIR
 rz5    Rrd42 (C) DEC DEC 0700   CD-ROM
```

This sample display shows an RZ24 drive set to SCSI ID 2 and an RRD42 drive set to SCSI ID 5.

Write down the names of your system drives and SCSI ID settings here. You will need them for future use.

Step 2: Shut Down System

Turn off the system unit by pressing O on the On/Off switch on the back of the system unit.

Caution: After you turn off the system, wait 15 seconds before you unplug the power cord.

Step 3: Disconnect Cables

Disconnect all the cables from the back of the system unit. Disconnect the power cord from the wall outlet and then from the system unit.

Step 4: Remove System Cover

1. Loosen the captive screw on the back of the system unit. This captive screw can be loosened but not removed.
2. Grasp each side of the cover with your hands, and pull the cover straight toward the front about 5.5 cm (2 inches). Pull the cover up and set it aside.

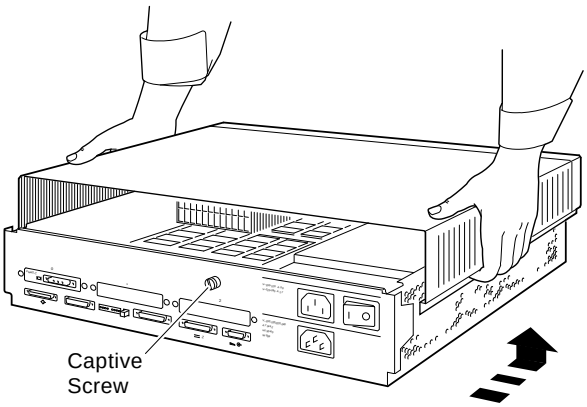

MLO-010006

Step 5: Remove Front Drive Panel

1. Loosen the two captive screws that hold the front drive panel in place.
2. Loosen the two captive screws on the back of the drive bracket.
3. If there is a drive inside the bracket, disconnect the SCSI and power cables from the drive.

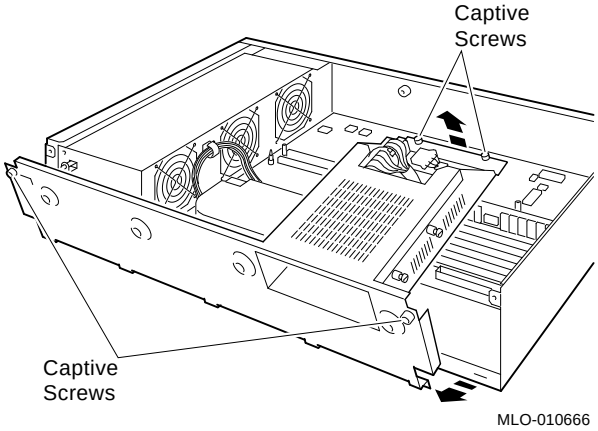

4. Pull up carefully from the back of the drive bracket. As you raise the end of the bracket, you can pull the disconnected ends of the cables through the cutout in the bracket.
5. Release the cables from the cable clamps on the inside of the front panel.
6. Set the front panel aside. Handle it carefully if it contains a drive.

Step 6: Remove Removable Media Drives

1. Loosen the captive screws on either side of the drive bracket.
2. Slide the drive out of the bracket and through the opening in the front panel.
3. Set the drive aside on an antistatic mat.

Step 7: Remove Fixed Disk Drives

1. Press down on the disk drive and unlock the sliding latch.
2. Lift the drive off the mounting post and out of the chassis cutouts.

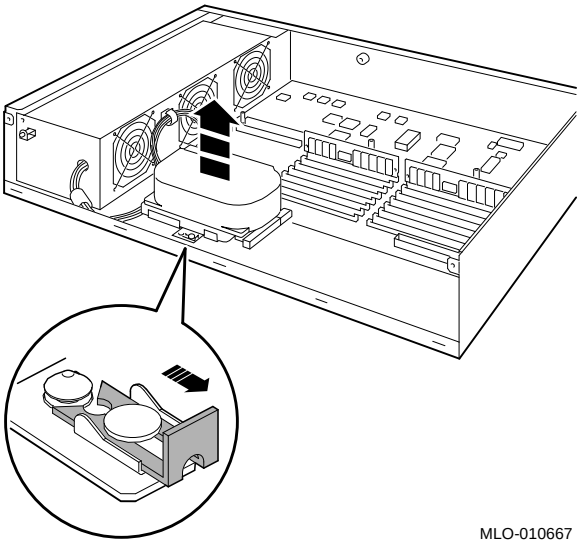

3. Disconnect the power and SCSI cables from the drive. Pull on the SCSI cable connector flap to remove the connector.
4. Remove the drive mounting bracket by removing the four screws that secure the mounting bracket to the drive.
5. Set the drive aside on an antistatic mat.
6. Put all the disconnected ends of the cables back into the system unit.

Step 8: Set the SCSI IDs on the Drives

If your Digital AlphaStation 200 Series system has a factory-installed disk drive, it is set to SCSI ID 0. Check the SCSI ID settings you noted earlier. If one of the drives you are upgrading is also set to SCSI ID 0, change that setting.

SCSI ID settings for drives can be found in Appendix A.

Step 9: Complete the Upgrade

1. Instructions for installing options that you have removed from your DECstation and completing the upgrade can be found in the *Digital AlphaStation 200 Series User Information*.
2. Update the customer service contract to the Digital AlphaStation 200 Series system.

Step 10: Return Your DECstation to Digital

To return your DECstation and any options that are not upgradeable to Digital:

1. Pack the DECstation and options securely in packing material.
2. Attach the return-address label that was in your upgrade kit, and ship the package to Digital.

8

Upgrading a DECstation 5000 Model 200/240/260

Topics Covered in This Chapter

- Upgrading your system
- Completing the upgrade

External Options Only

You can only upgrade the expansion boxes connected to your DECstation 5000 Model 200/240/260 to the Digital AlphaStation Model 200 system.

Upgrade Procedure

Step 1: If Your System Has Factory-Installed Drives

If your Digital AlphaStation Model 200 system has factory-installed drives, you may need to change the SCSI IDs on the drives you are upgrading.

To display the SCSI ID settings of the drives in your expansion box:

1. Enter the command to shut down the software and put the system in console mode: `shutdown -h now`

2. Enter `cnfg 3` at the console prompt (>>>). A screen similar to the following appears:

```
>>> cnfg 3

3:      KNO2   DEC   Vn.n    TCF0              (12 MB)
-----------------------------------------------------
        DEV    PID       VID    REV     SCSI ID
-----------------------------------------------------
        rz2    RZ24  (C) DEC    0700   DIR
        rz5    RX26  (C) DEC    0700   SEQ
```

This sample display shows an RZ24 drive set to SCSI ID 2 and an RX26 drive set to SCSI ID 5.

Write down the names of your system drives and SCSI ID settings here. You will need them for future use.

Step 2: Shut Down System

Turn off the system unit by pressing O on the On/Off switch on the back of the system unit.

Caution: After you turn off the system, wait 15 seconds before you unplug the power cord.

Step 3: Disconnect Cables

Disconnect all the cables from the back of the system unit.

Disconnect the power cord from the wall outlet and then from the system unit.

Step 4: Set the SCSI IDs on the Drives

If your Digital AlphaStation Model 200 system has a factory-installed disk drive, it is set to SCSI ID 0. Check the SCSI ID settings you noted earlier. If one of the drives you are upgrading is also set to SCSI ID 0, change that setting.

Settings for drives can be found in the expansion box documentation.

Step 5: Complete the Upgrade

1. Follow the instructions in the *Digital AlphaStation 200 Series User Information* to complete the upgrade.
2. Update the customer service contract to the Digital AlphaStation Model 200 system.

Step 6: Return Your DECstation to Digital

To return your DECstation and any options that are not upgradeable to Digital:

1. Pack the DECstation and options securely in packing material.
2. Attach the return-address label that was in your upgrade kit, and ship the package to Digital.

9

Upgrading Other Systems

No Options Can Be Upgraded

There are no options that you can remove from systems, such as a VAXstation I, VAXstation II, VAXstation II/GPX, VAXstation 2000, VAXstation 3100, VAXstation 3200, VAXstation 3500 or DECstation 2100/3100, and install in your Digital AlphaStation 400 Series system.

Upgrade Procedure

To upgrade your current system, follow the two steps listed below.

Step 1: Return Your System to Digital

Return your system and any options to Digital.

1. Pack the system and options securely in packing material.
2. Attach the return-address label that was in your upgrade kit and ship the package to Digital.

Step 2: Update Service Contract

After installing your new system, update the customer service contract to the Digital AlphaStation 400 Series system.

A

SCSI ID Settings for Drives

Setting a Unique SCSI Address

Each internal drive has a SCSI address that must be unique. If more than one drive is set to the same SCSI address, the system cannot communicate with the drives.

When your drive arrives from the factory, all SCSI jumpers may be attached so that they are not lost during shipment. If this is the case, the address is set to 7, and must be changed.

TURBOchannel modules and memory modules do not have SCSI addresses.

This appendix contains an illustration for each of the drives supported on the Digital AlphaStation 200 Series system.

Selecting SCSI ADDRESS

There are six possible SCSI ID settings (SCSI ID setting 7 is reserved for the controller). The following table shows the settings that Digital recommends.

Drive Type	SCSI ID Setting
Fixed disk drive	0,1,2,3
Compact disk drive	4
Tape or diskette drive	5
Tape or diskette drive	6

Changing the Setting

Follow these steps to change a SCSI ID setting:

Jumpers:

Jumpers are removable electrical connectors. Carefully remove or replace jumpers using tweezers or another small tool. Save any SCSI jumpers you remove; you may need them later.

Switches:

Carefully set the switches using a small pointed instrument, such as the tip of a ball point pen. Do not use a pencil to set the SCSI switches; graphite particles can damage switches.

Figure A–1 TZK11 Tape Drive SCSI ID Settings

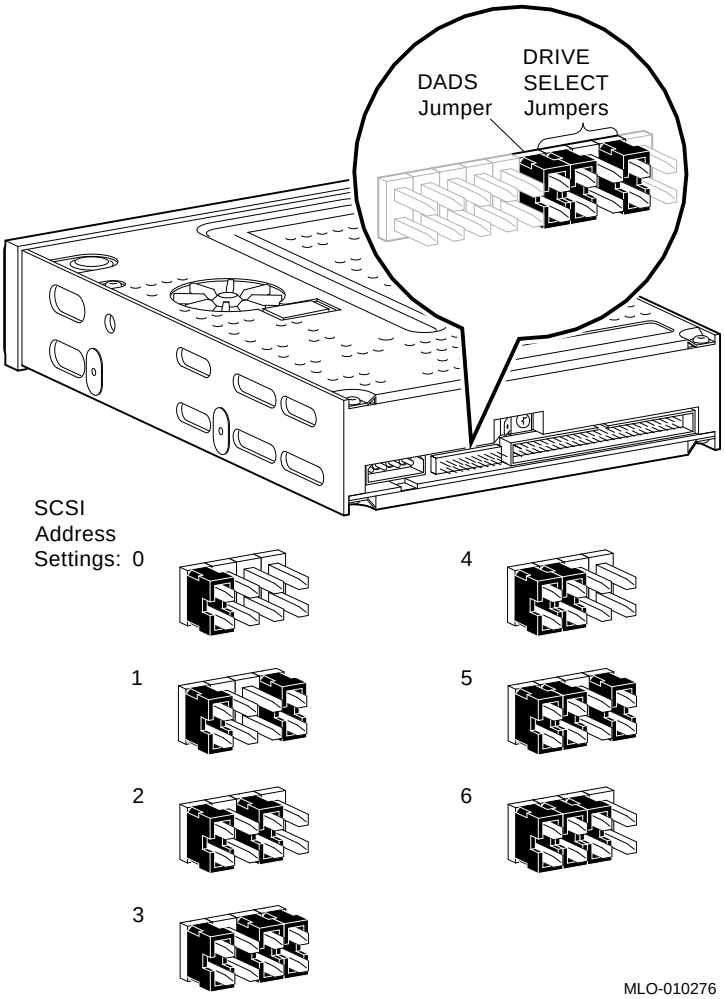

The DADS Jumper

Before using the TZK10 drive, configure the drive; that is, check the DADS jumper to make sure it is set for the desired operating system. The DADS jumper is the fifth jumper from the right side, and must be in place for both OpenVMS AXP and DEC OSF/1 AXP operating systems.

Figure A–2 RRD43 Disk Drive SCSI ID Settings

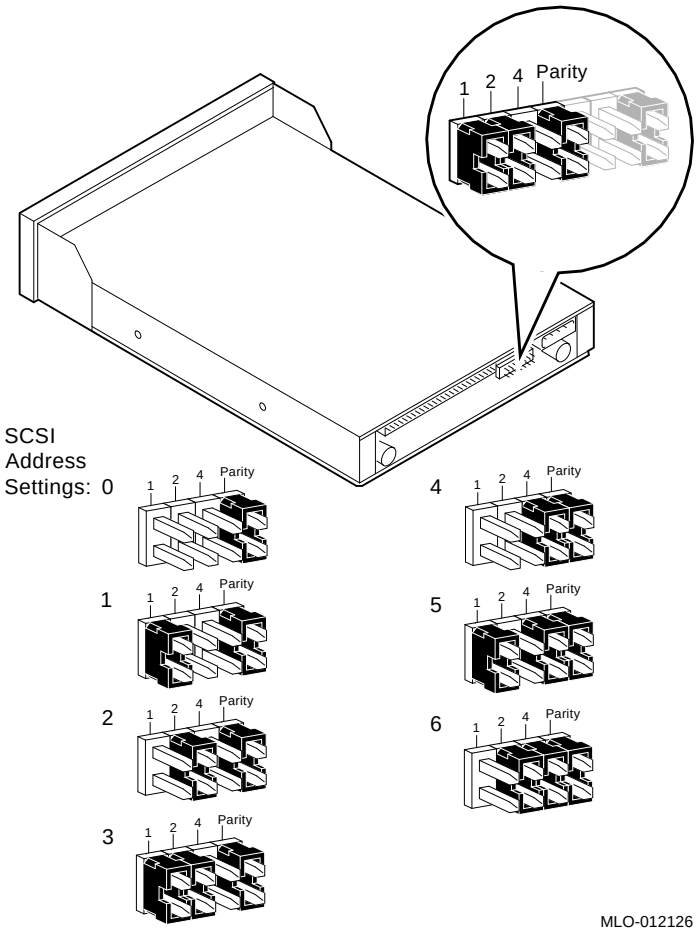

Mode (Parity) Jumper

The mode (parity) jumper allows the drive to work with your operating system. The jumper must be in place for both OpenVMS AXP and DEC OSF/1 AXP operating systems.

Figure A–3 TLZ06/07 Tape Drive SCSI ID Settings

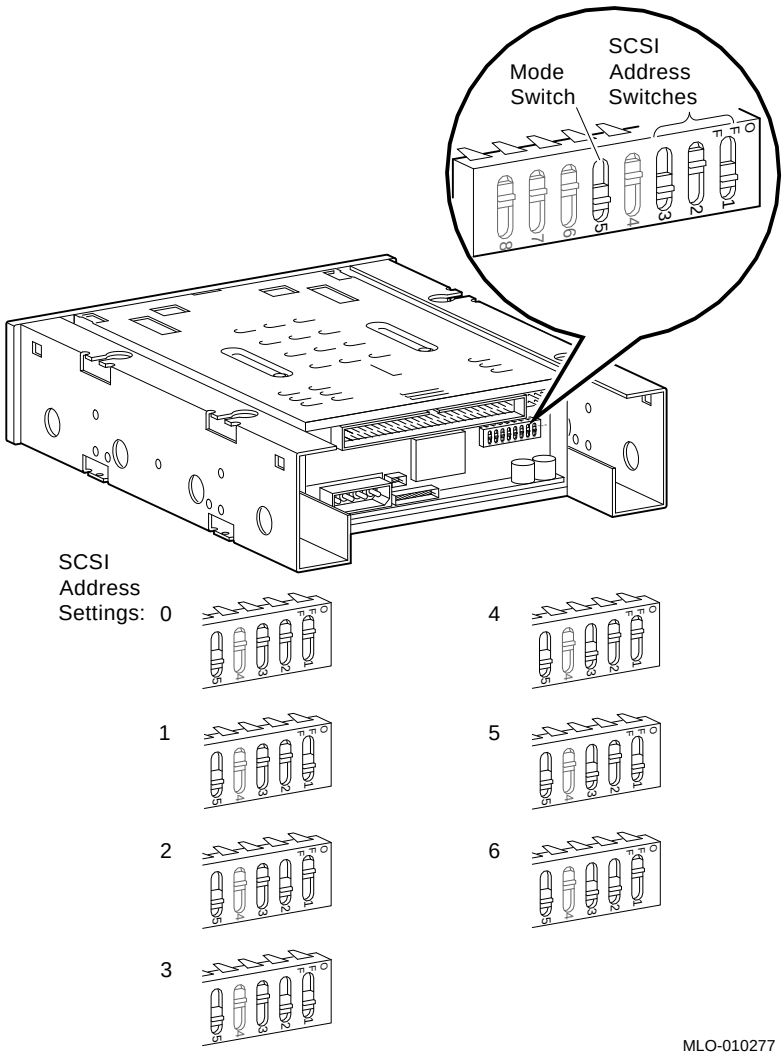

Mode Switch

Switch 5 (mode) allows the drive to work with your operating system, and must be down for both OpenVMS AXP and DEC OSF/1 AXP operating systems.

Figure A–4 RZ25L Fixed Disk Drive SCSI Settings

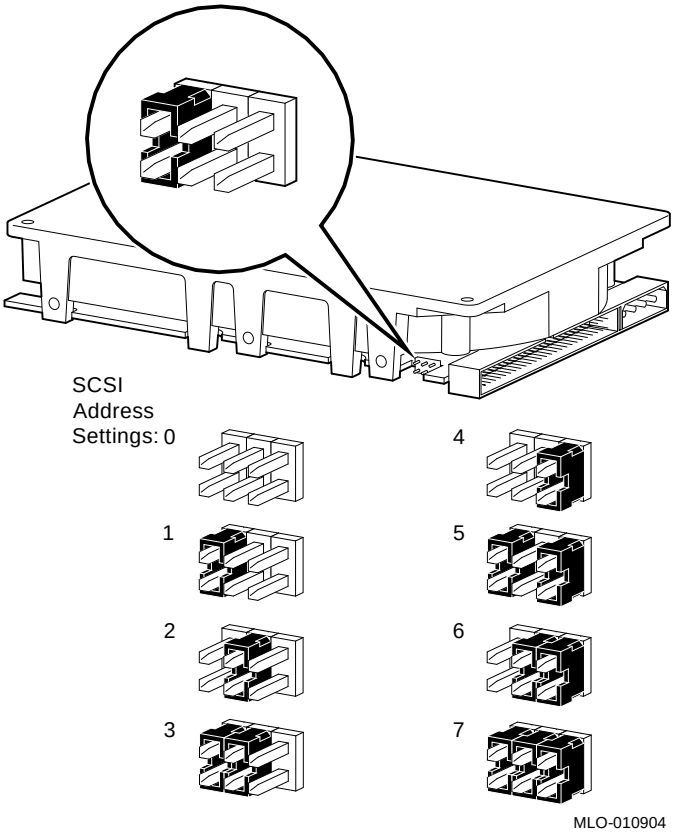

Figure A–5 RZ26L Fixed Disk Drive SCSI Settings

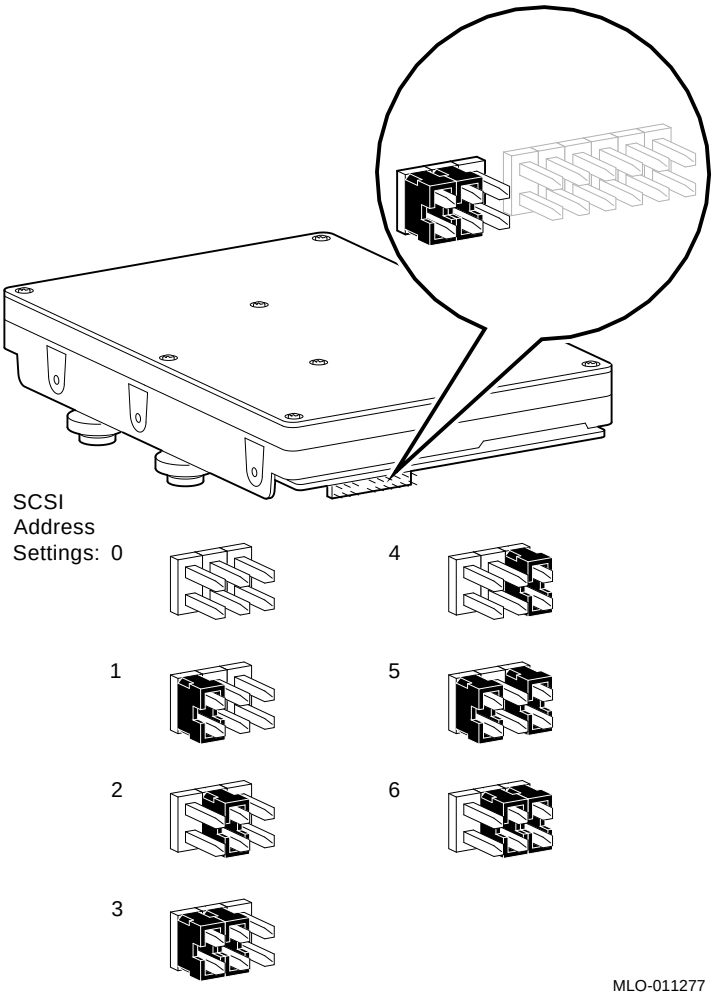
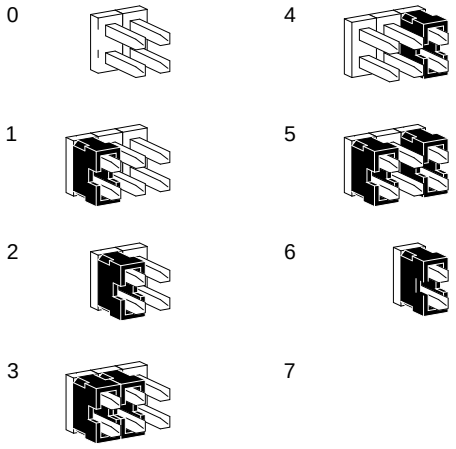
Figure A–6 RZ28 Fixed Disk Drive SCSI Settings