D-IC-43-3 REV –

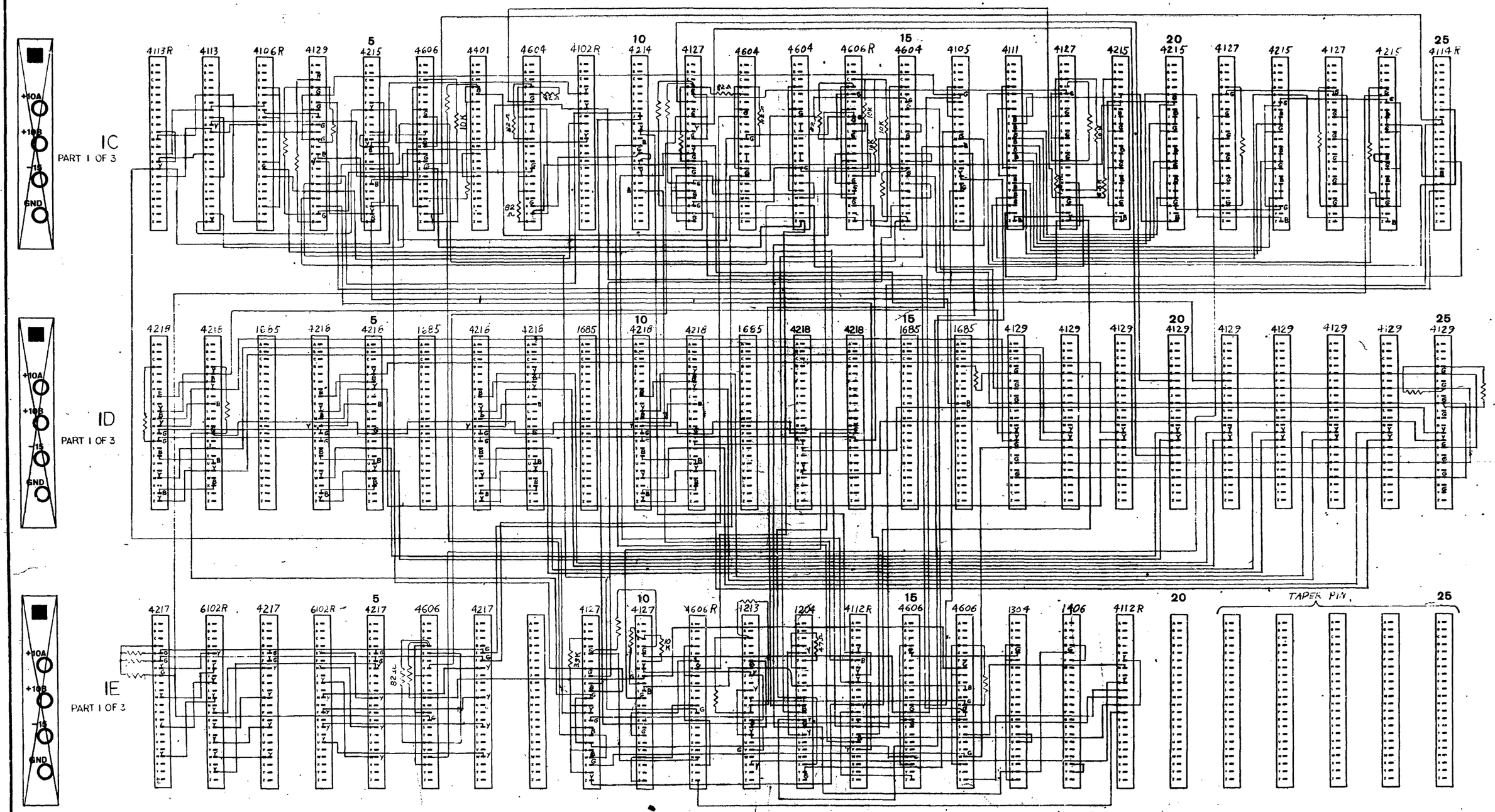


NOTE: UNLESS OTHERWISE INDICATED:
TERMINATOR RESISTORS ARE 22 OHMS.
RESISTORS TO PIN C ARE 10K
USE 1914 MTG PANELS

~~WIRING LAYOUT~~
~~TYPES 1901 AND 1903~~

| CODE | | CHANGE | | | | |
|---|---|---|---|---|---|---|
| WD | | NO. | EXPER. | DATE 2-7-63 R. BEZOKAS | TAKEN FROM D-131-0-2 REV C | REV |
| | | APP. | PRODUCTION | CHECKED | RACKS IC, ID, IE | SHEET 1 OF 3 D.C. 131 |
| | | | OTHER | ENGINEER | digital EQUIPMENT CORPORATION MAYNARD, MASSACHUSETTS | D-IC-43-3 |

D-IC-43-3 REV.

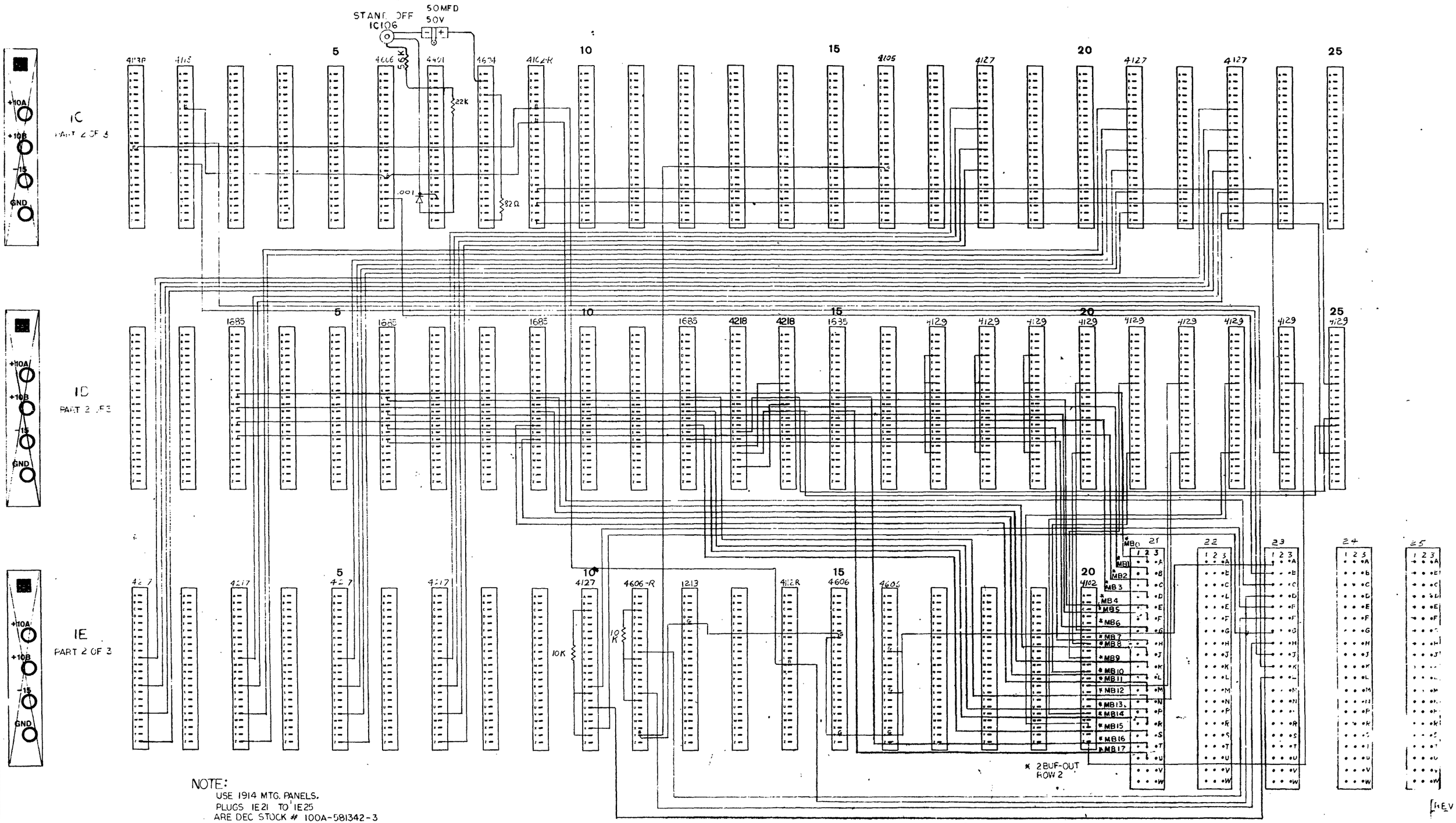


NOTE:
USE 1914 MTG. PANELS.
PLUGS IE21 TO IE25
ARE DEC STOCK # 100A-581342-3

REV

TAKEN FROM D-131-0-2 REV C

**WIRING LAYOUT**
~~TYPES 1901 AND 1903~~

| CODE | | CHG NO | CHANGE | | | |
|---|---|---|---|---|---|---|
| WD | | | EXPER | DRAWN 2-5-65 R. BERZONAS | RACKS IC, ID, IE D.C. 131 SH. 2 OF 3 | |
| | | | PRODUCTION | CHECKED | digital EQUIPMENT CORPORATION MAYNARD MASSACHUSETTS | D-IC-43-3 |
| | | | OTHER | ENGINEER | | |

CODE BS | DRWG. NO. D-IC-43-4 | REV. LTR.

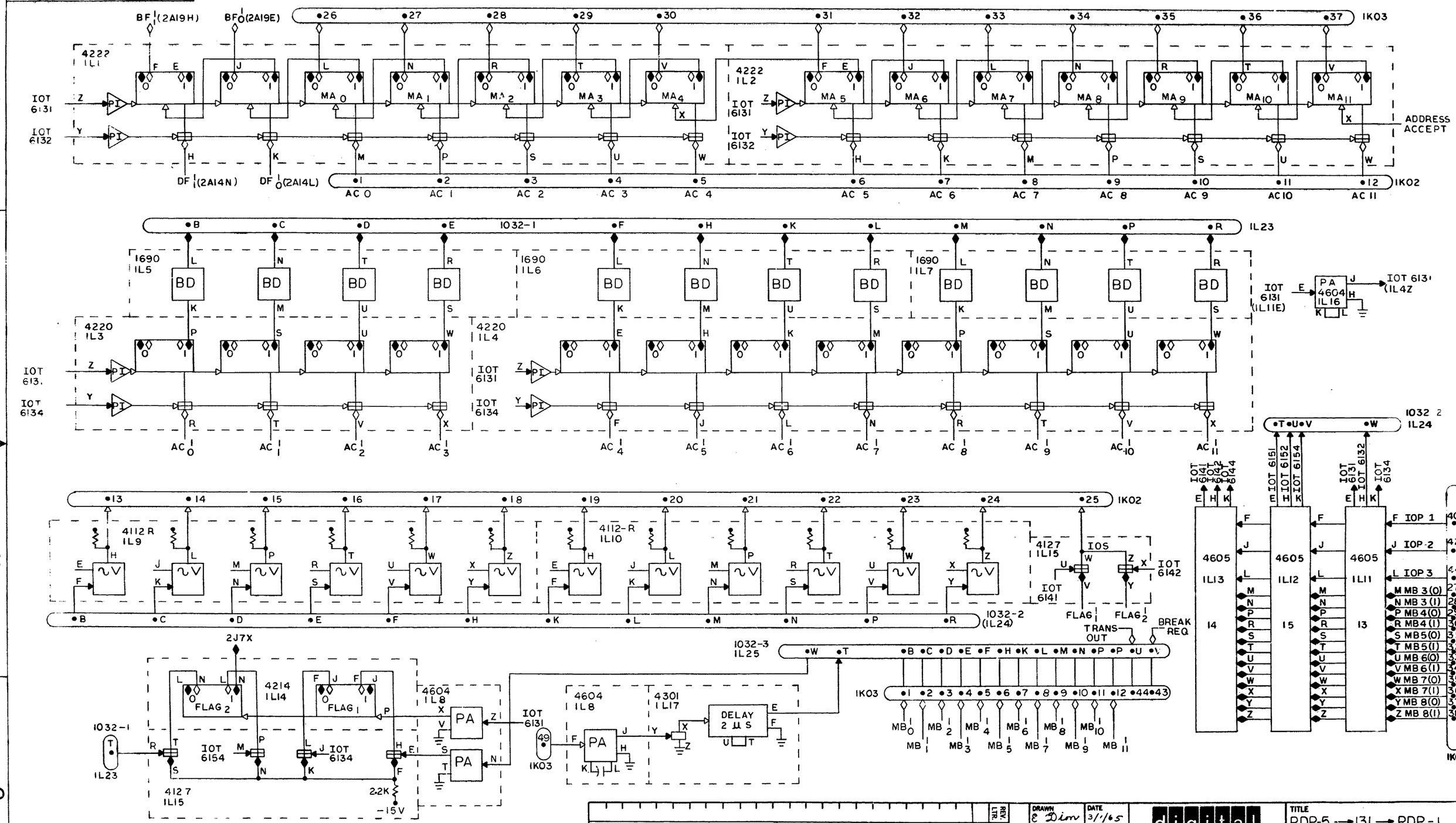


| REV. LTR. | ECO NO. | DATE | ENG |
|---|---|---|---|
| | ORIG 341 | 3/1/65 | |

REVISIONS

| | | | |
|---|---|---|---|
| DRAWN | E Dim | DATE | 3/1/65 |
| CHECKED | P.B. Geans | DATE | 3-10-65 |
| ENG | | DATE | 3-19-65 |
| PROJ ENG | | DATE | 3-19-65 |
| PROD | | DATE | 3-19-65 |

digital EQUIPMENT CORPORATION
MAYNARD, MASSACHUSETTS

ASSY NO

SHEET 1 OF 1

TITLE PDP-5 → 131 → PDP-1 INTERFACE

FOR

CODE BS | DRWG. NO. D-IC-43-4 | REV. LTR.

DIST.