Digital Equipment Corporation
Maynard, Massachusetts

digital

Maintenance Manual

PDP-8/L

Volume II

PDP-8/L
MAINTENANCE MANUAL
Volume II

DIGITAL EQUIPMENT CORPORATION ▫ MAYNARD, MASSACHUSETTS

1st Printing April 1969
2nd Printing (Rev) December 1969
3rd Printing February 1970

Copyright © 1969, 1970 by Digital Equipment Corporation

The material in this manual is for information purposes and is subject to change without notice.

The following are trademarks of Digital Equipment Corporation, Maynard, Massachusetts:

DEC	PDP
FLIP CHIP	FOCAL
DIGITAL	COMPUTER LAB

ENGINEERING DRAWINGS

Engineering drawings, necessary for understanding the logic circuits and performance of maintenance on the equipment, are contained in this volume. Only those drawings that are essential, and not available in the referenced documents, are included. If any discrepancies are found between the drawings in this volume and those supplied with the equipment, it should be assumed that the drawings supplied with the equipment are correct.

DRAWING NUMBERS

Digital Equipment Corporation (DEC) engineering drawing numbers are composed of an alphanumeric number containing five discrete parts. Each discrete part contains specific information as shown in the following example.

D-BS-99XX-1-5

Reading from left to right: a one-letter code specifying the drawing size (D size); a two-letter code specifying the type of drawing (block schematic (BS)); a group of numbers and letters specifying the type number of the equipment (99XX or a 99XX module); a single-digit number specifying the manufacturing series of the equipment (1 or first engineering change); and the last single-digit number specifying the number of the drawing within a particular series (5 or the fifth in the series).

The drawing type codes are:

BS	block schematic or logic diagram	DI	drawing index list
CD	cable diagram	FD	flow diagram
CL	cable list	KS	key sheet
CS	circuit schematic	ML	master drawing list
MU	module utilization	TD	timing diagram
PW	power wiring	WD	wiring diagram
RS	replacement schematic	WL	wiring list

CIRCUIT SYMBOLS

DEC engineering block schematic diagrams indicate signal flow, logic functions, circuit type and physical location, wiring, and other pertinent information. Individual circuits are shown in block or semiblock form, using standard symbols similar to those that appear in other DEC publications.

LOCATION DESIGNATIONS

General

To make signal tracing easier, DEC uses a numbering system on drawings that gives the location, in the equipment, of all signals named on the drawing. In the main frame, module receptacle connectors are identified with capital letters that designate horizontal rows of modules within the mounting frame from top to bottom (A is the first row, B is the second row, etc.). Module receptacles are numbered from left to right viewed from the wiring side (right to left from the module side). Capital letters (G, I, O and Q are omitted) are assigned to the terminal connectors from top to bottom.

Double-Sided Modules

On double-sided modules or connectors, the sides are designated by a suffix number (1 for the left side and 2 for the right side). The drawings are divided into subunits, by dashed lines, that indicate different modules. Inside the dashed lines appear two sets of numbers (together) that tell the type and location of the module; for example, M113 F32 shows an M113 module located in row F (6th from the top), slot 32 (32nd from left side, wiring side). All signals have a number associated with them that tells the pin number and module side number; for example, M2 is pin M, side 2 (right) of a double-sided module. Hence, a signal with M113 F32 M2 is found on pin M, side 2, of module M113 located in row F, slot 32.

Double-Height Modules

On modules or connectors that are double-height (occupy two places in a block of connectors, one above the other), the module location and pin numbers identification is similar to the double-sided module identification, except that there are two letters associated with the module location and pin numbers. For example, a signal with M710 HJ28 HE2 is found on an M710 module located in rows H and J, slot 28, and the signal is on pin E, side 2 on the connector in row H.

ENGINEERING DRAWINGS

Drawing Number	Title	Rev	Page
D-FD-8L-0-21	Flow Diagram (2 sheets)		2
D-BS-8L-0-2	Timing, Manual Functions and Run	D	4
D-BS-8L-0-3	Instruction Reg. and Major States	B	5
D-BS-8L-0-4	Reg. Output Gate Control	C	6
D-BS-8L-0-5	Shift and Carry Gate Control	C	7
D-BS-8L-0-6	Reg. Input Control and Skip	B	8
D-BS-8L-0-7	Interrupt and Break Control	B	9
D-BS-8L-0-8	Major Registers		10
D-BS-8L-0-9	Major Register Gating (4 sheets)		11
D-BS-8L-0-10	I/O Converters	B	15
D-BS-8L-0-11	Teletype Receiver	A	16
D-BS-8L-0-12	Teletype Transmitter	B	17
D-BS-8L-0-13	Memory Control	E	18
D-BS-8L-0-14	Sense Amps and Inhibit Drivers		19
D-BS-8L-0-15	X-Axis Selection		20
D-BS-8L-0-16	Y-Axis Selection		21
D-BS-8L-0-17	Misc. Connections MC8/L	B	22
D-MU-8L-0-18	Module Utilization (2 sheets)	H	23
D-CS-718-0-1	Power Supply 718		25
B-CS-G020-0-1	Sense Amplifier	D	26
B-CS-G221-0-1	Memory Selector	C	26
B-CS-G228-0-1	Inhibit Driver	A	26
C-CS-G610-0-1	A-Diode Board	B	27
C-CS-G611-0-1	B-Diode Board	A	27
B-CS-G624-0-1	Resistor Board	D	27
B-CS-G785-0-1	Power Connector		27
C-CS-G826-0-1	Regulator Control	L	28
D-CS-G921-0-1	PDP-8/L Control Panel		29
B-CS-M002-0-1	15 Loads		30
B-CS-M111-0-1	Inverter	A	30
B-CS-M113-0-1	10 2-Input NAND Gates	C	30
B-CS-M115-0-1	8 3-Input NAND Gates	C	30
B-CS-M117-0-1	6 4-Input NAND Gates	C	31
B-CS-M119-0-1	3 8-Input NAND Gates	B	31
B-CS-M160-0-1	Gate Module	B	31
B-CS-M216-0-1	Six Flip-Flops	B	31
D-CS-M220-0-1	Major Registers	B	32
B-CS-M310-0-1	Delay Line	A	33
B-CS-M360-0-1	Variable Delay	B	33
B-CS-M452-0-1	Variable Clock	A	34
B-CS-M516-0-1	Positive Bus Receiver		34
B-CS-M617-0-1	6 4-Input NOR Buffers	B	34
C-CS-M623-0-1	Bus Driver		34
B-CS-M660-0-1	Positive Level Driver	A	35
C-CS-M700-0-1	Manual Timing Generator	B	35
C-CS-M706-0-1	Teletype Receiver	B	36
C-CS-M707-0-1	Teletype Transmitter	D	36
B-CS-M901-0-1	Flexprint Cable Connector		37
B-CS-M903-0-1	Connector (Flexprinter)		37
B-CS-M906-0-1	Cable Terminator		37
B-CS-W076-0-1	Teletype Connector		37

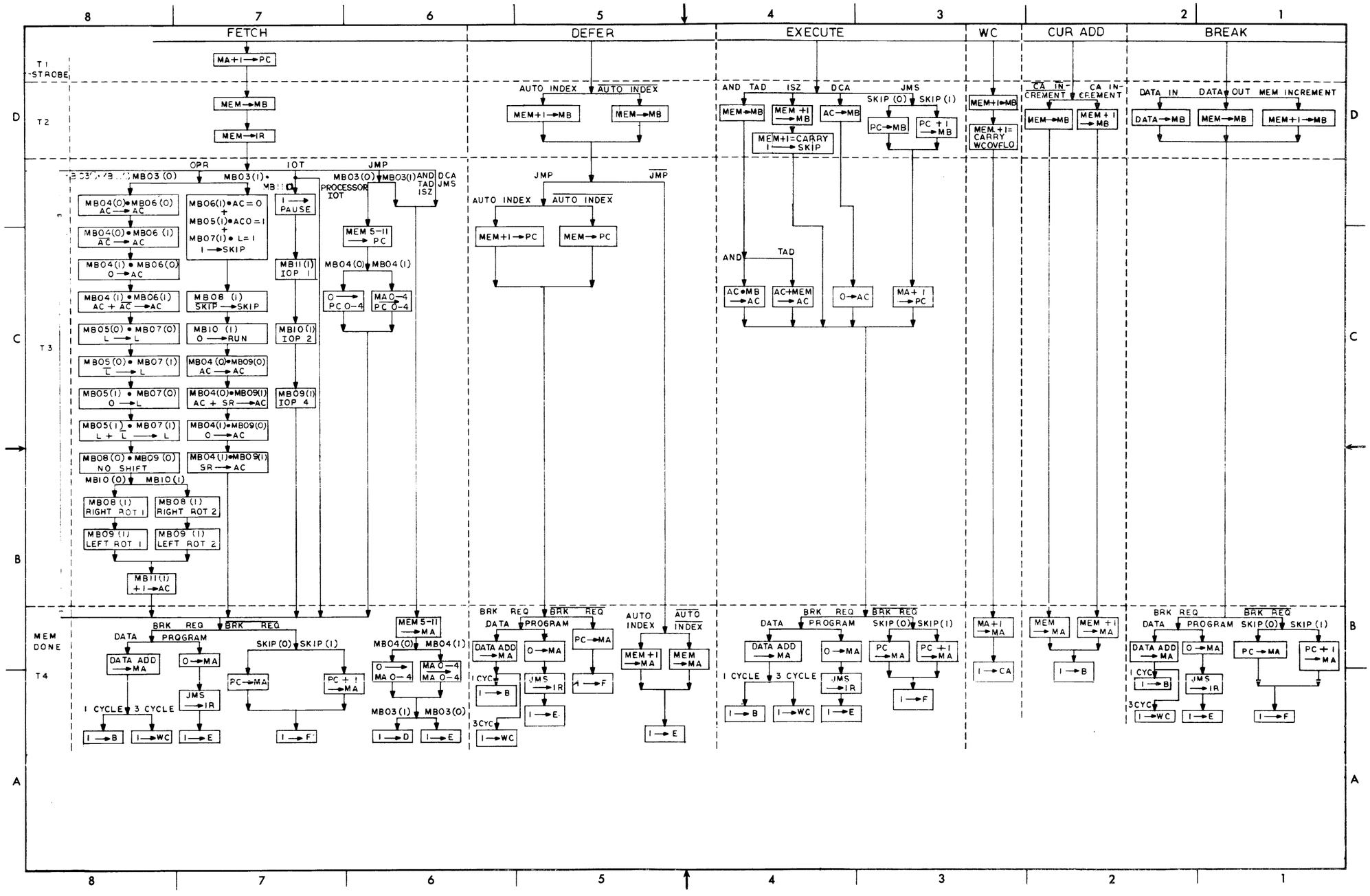

D-FD-8L-0-21 Flow Diagram (Sheet 1)

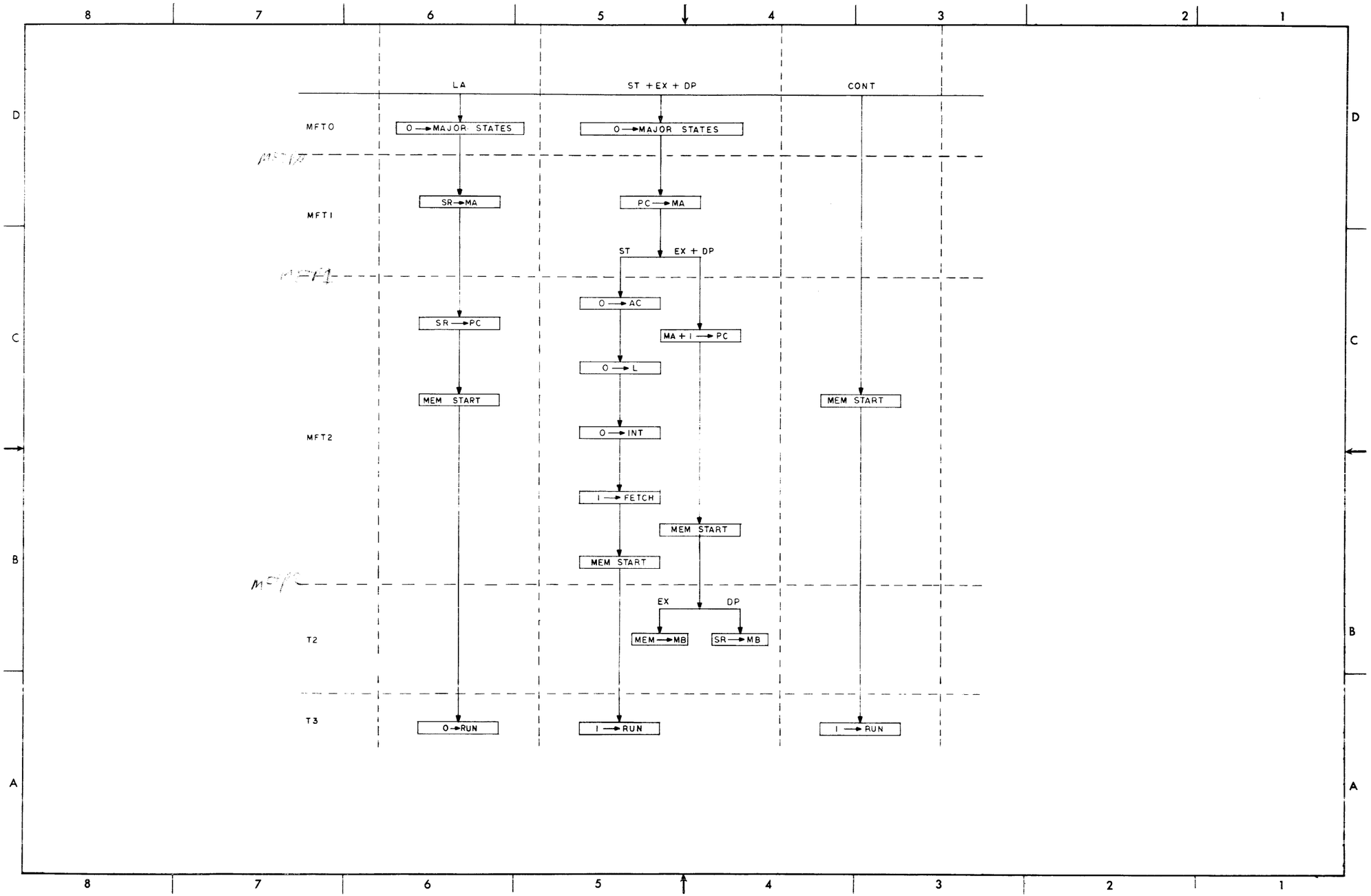

D-FD-8L-0-21 Flow Diagram (Sheet 2)

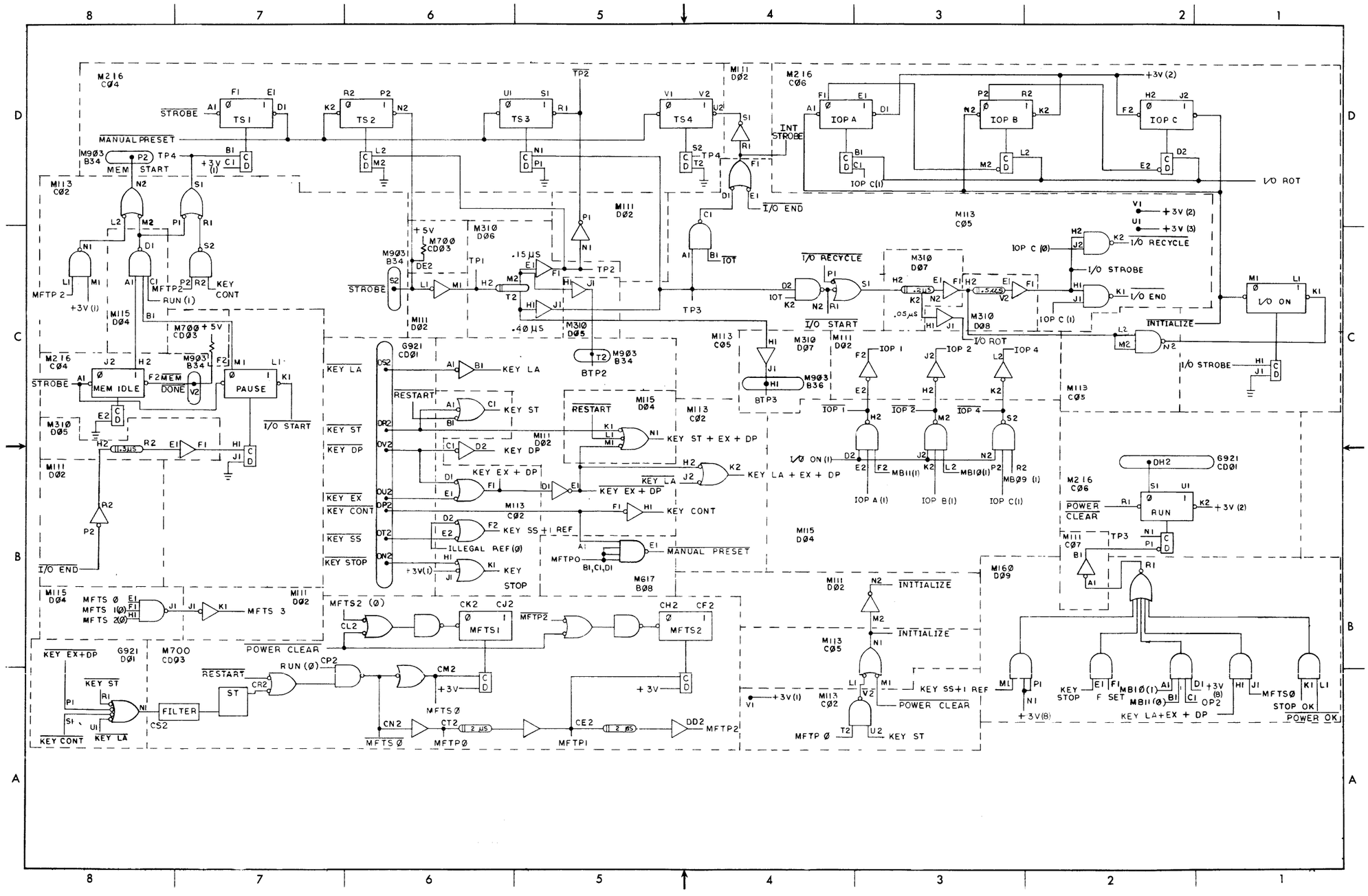

D-BS-8L-0-2 Timing, Manual Functions and Run

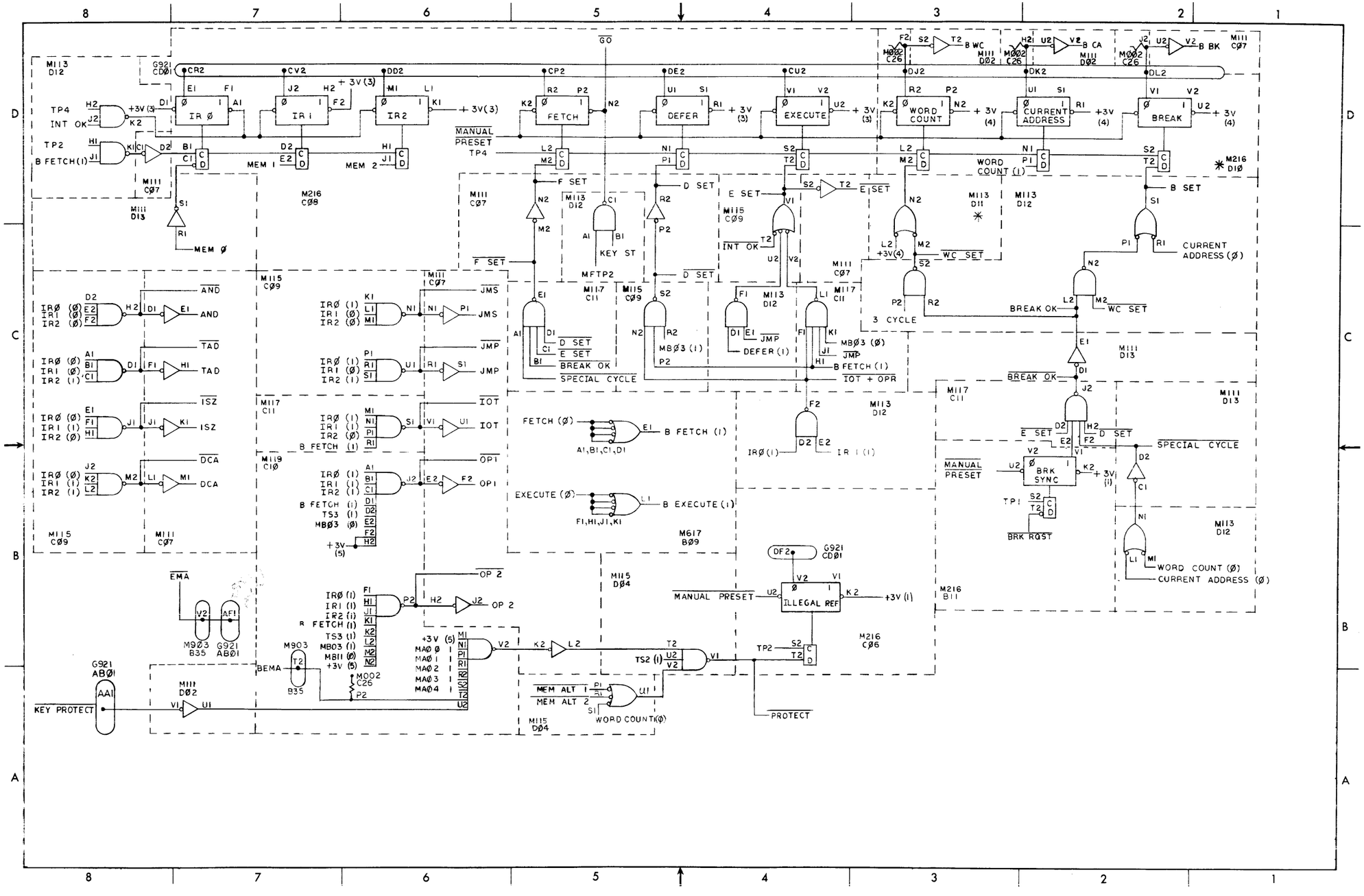

D-BS-8L-0-3 Instruction Reg. and Major States

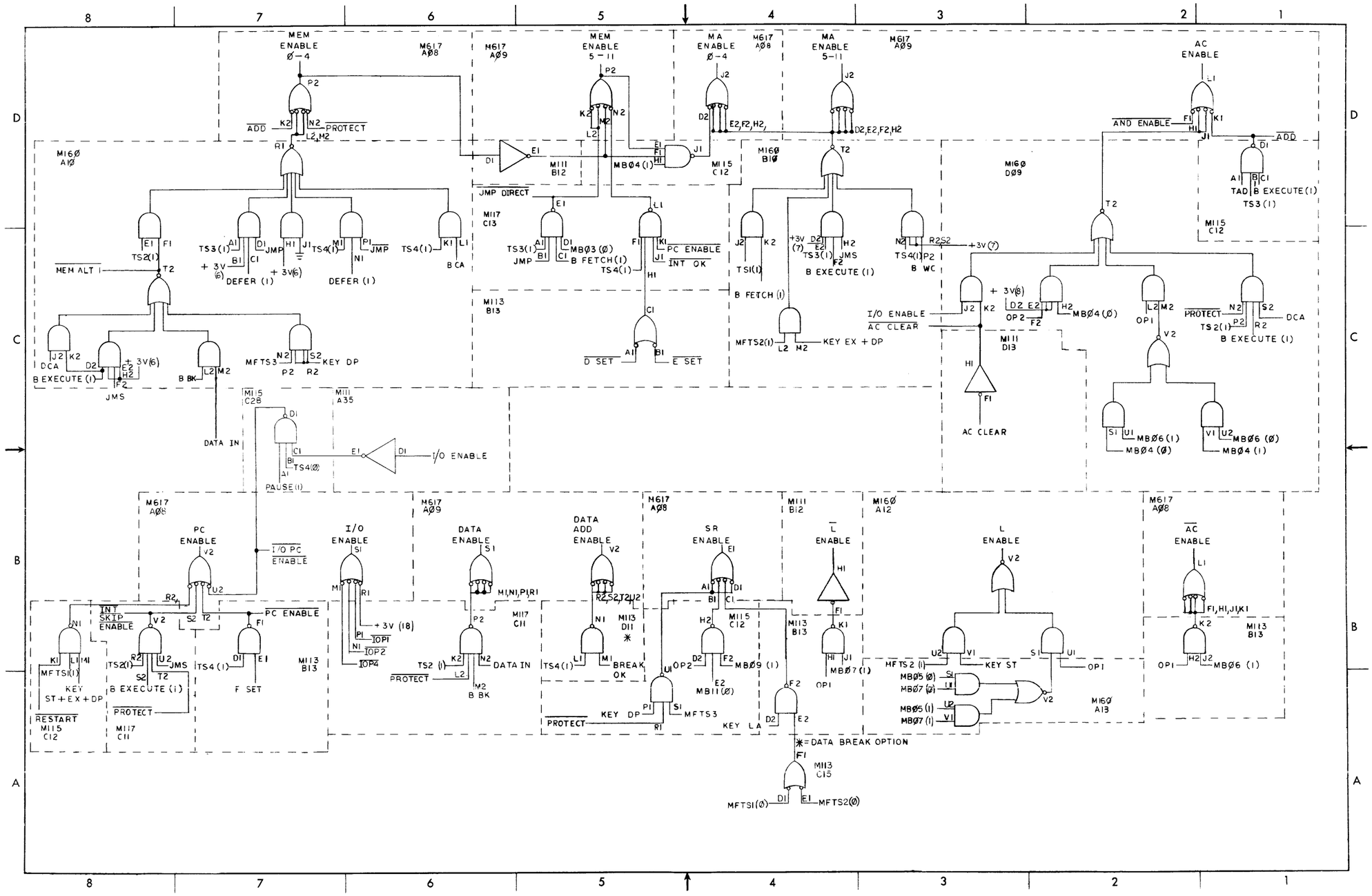

D-BS-8L-0-4 Reg. Output Gate Control

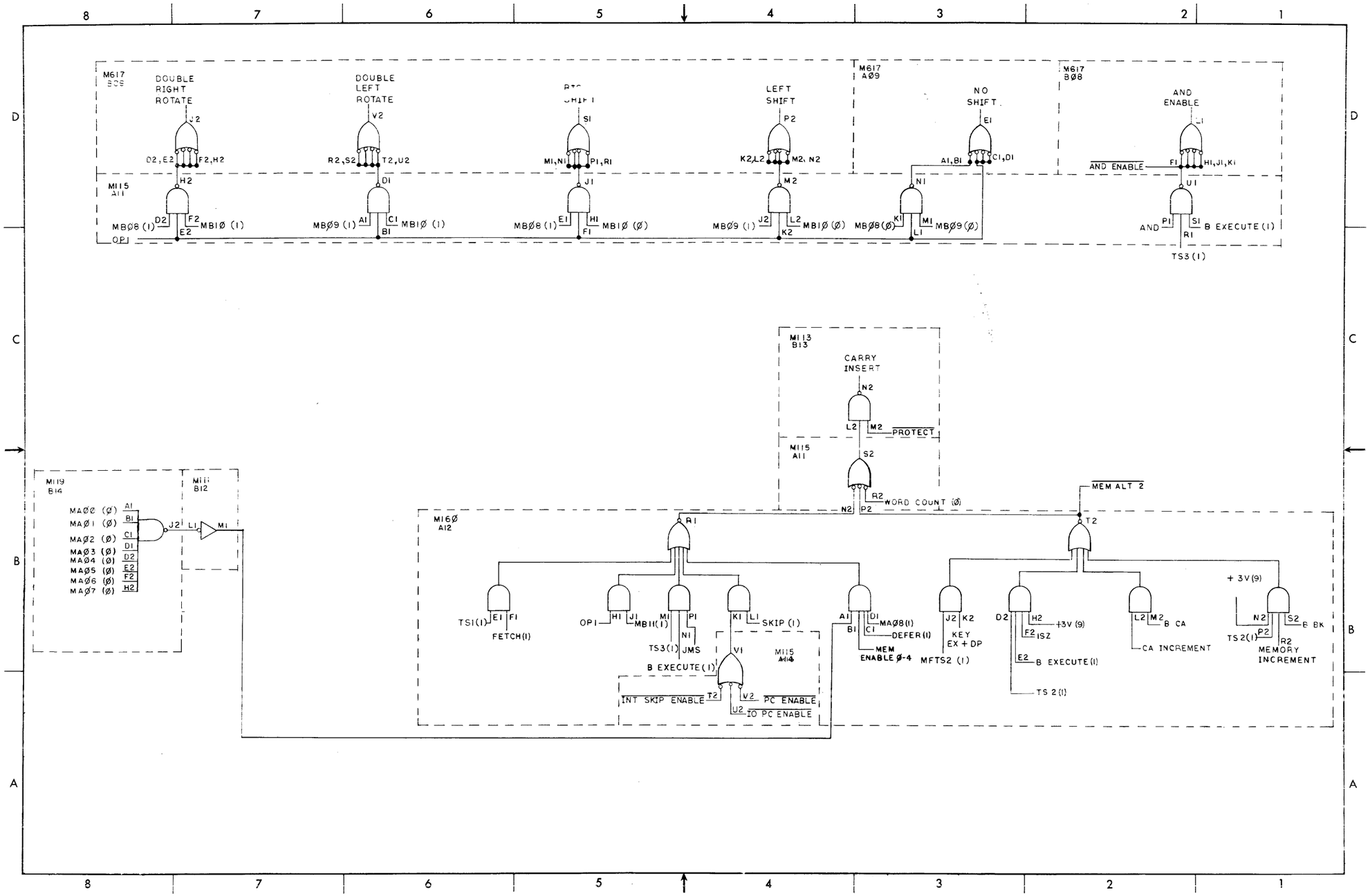

D-BS-8L-0-5 Shift and Carry Gate Control

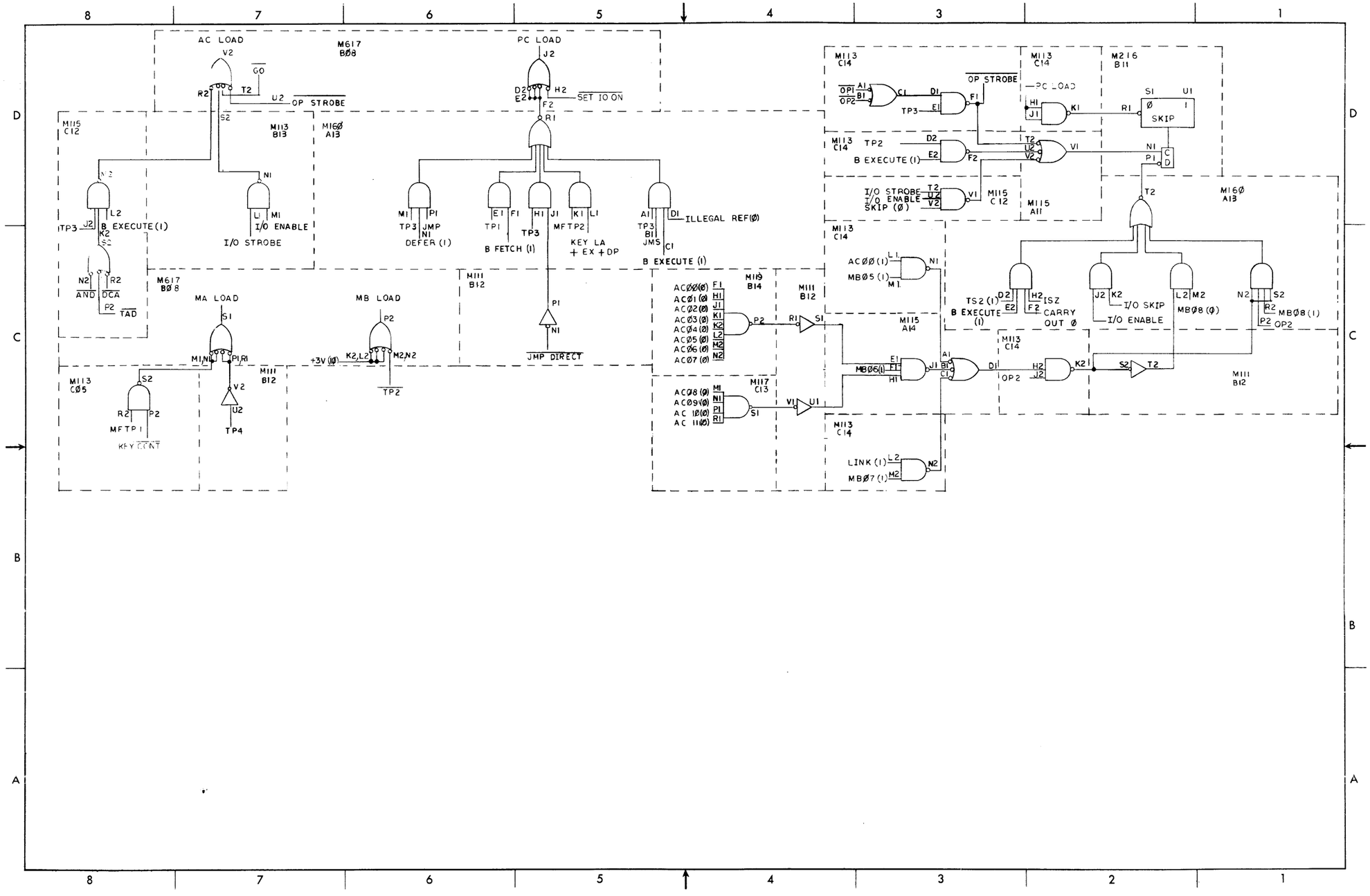

D-BS-8L-0-6 Reg. Input Control and Skip

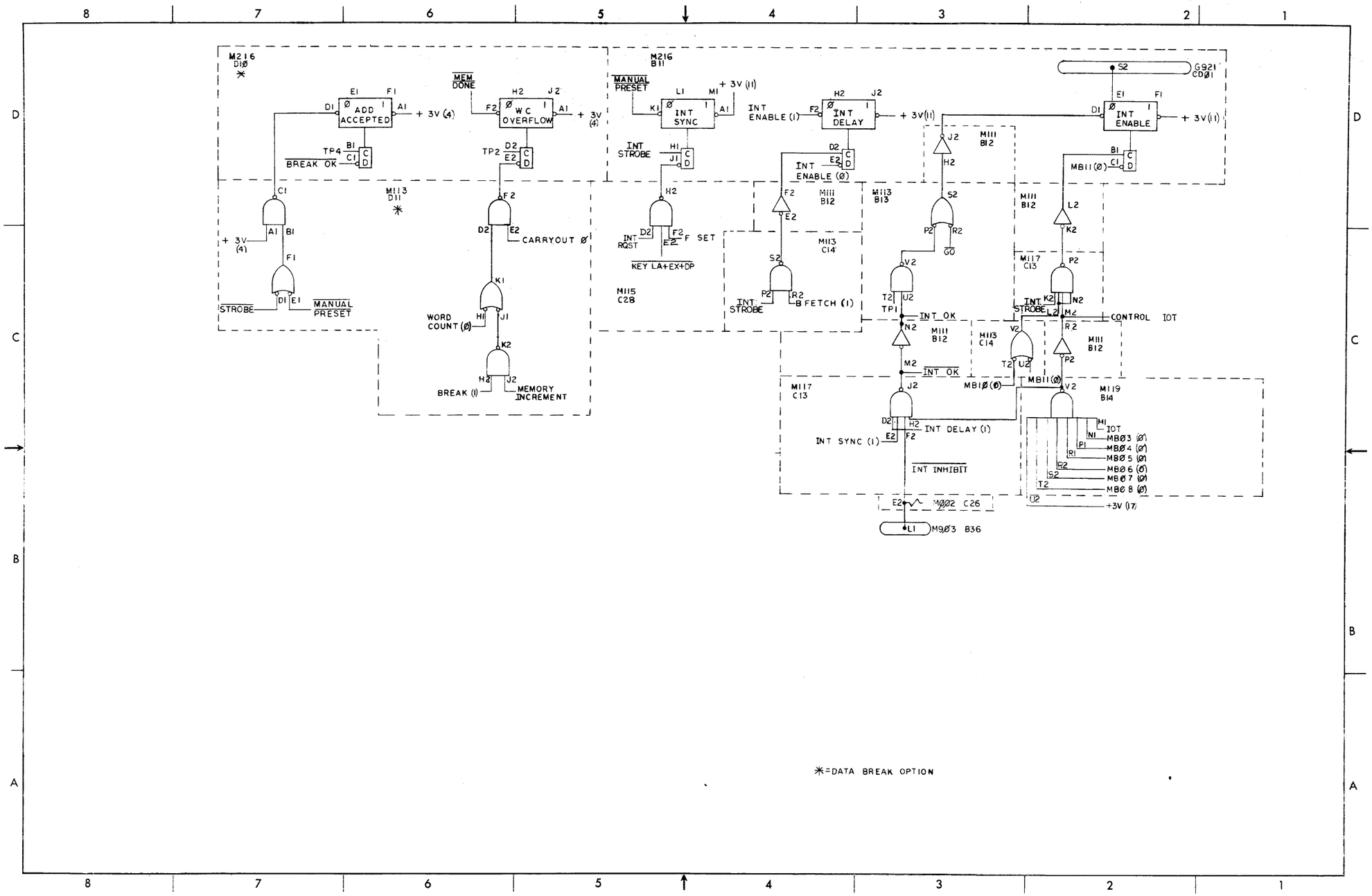

D-BS-8L-0-7 Interrupt and Break Control

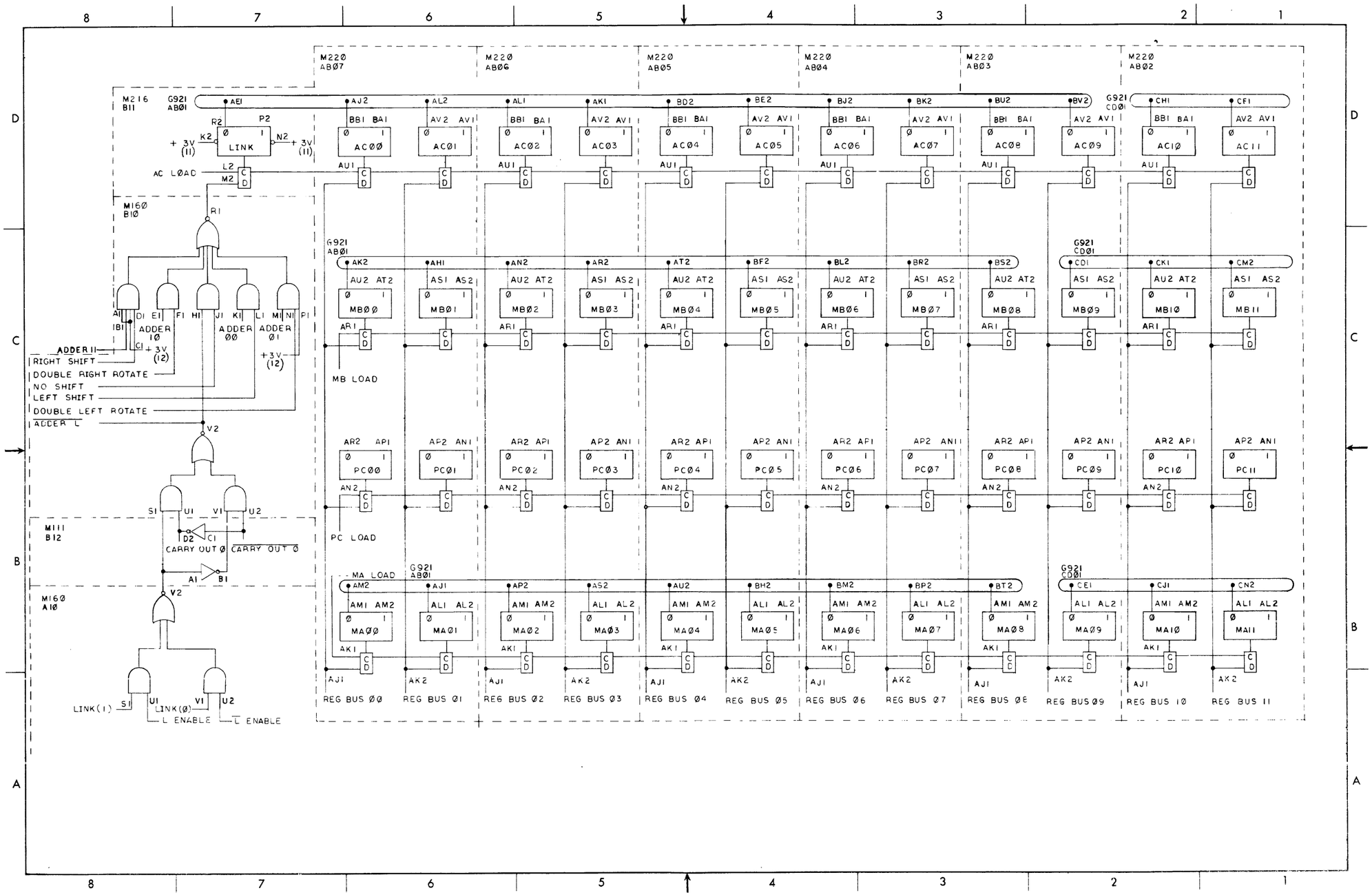

D-BS-8L-0-8 Major Registers

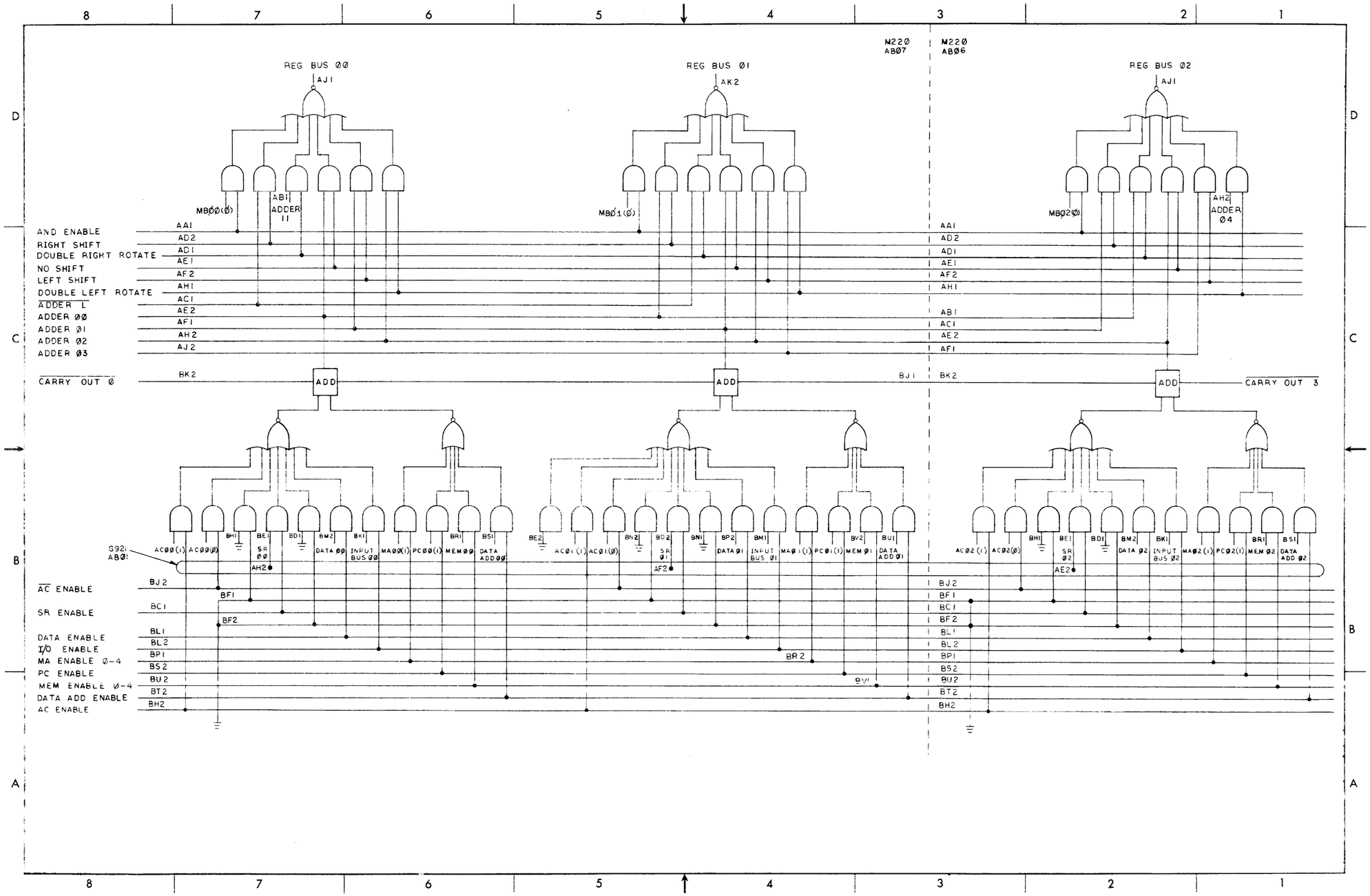

D-BS-8L-0-9 Major Register Gating (Sheet 1)

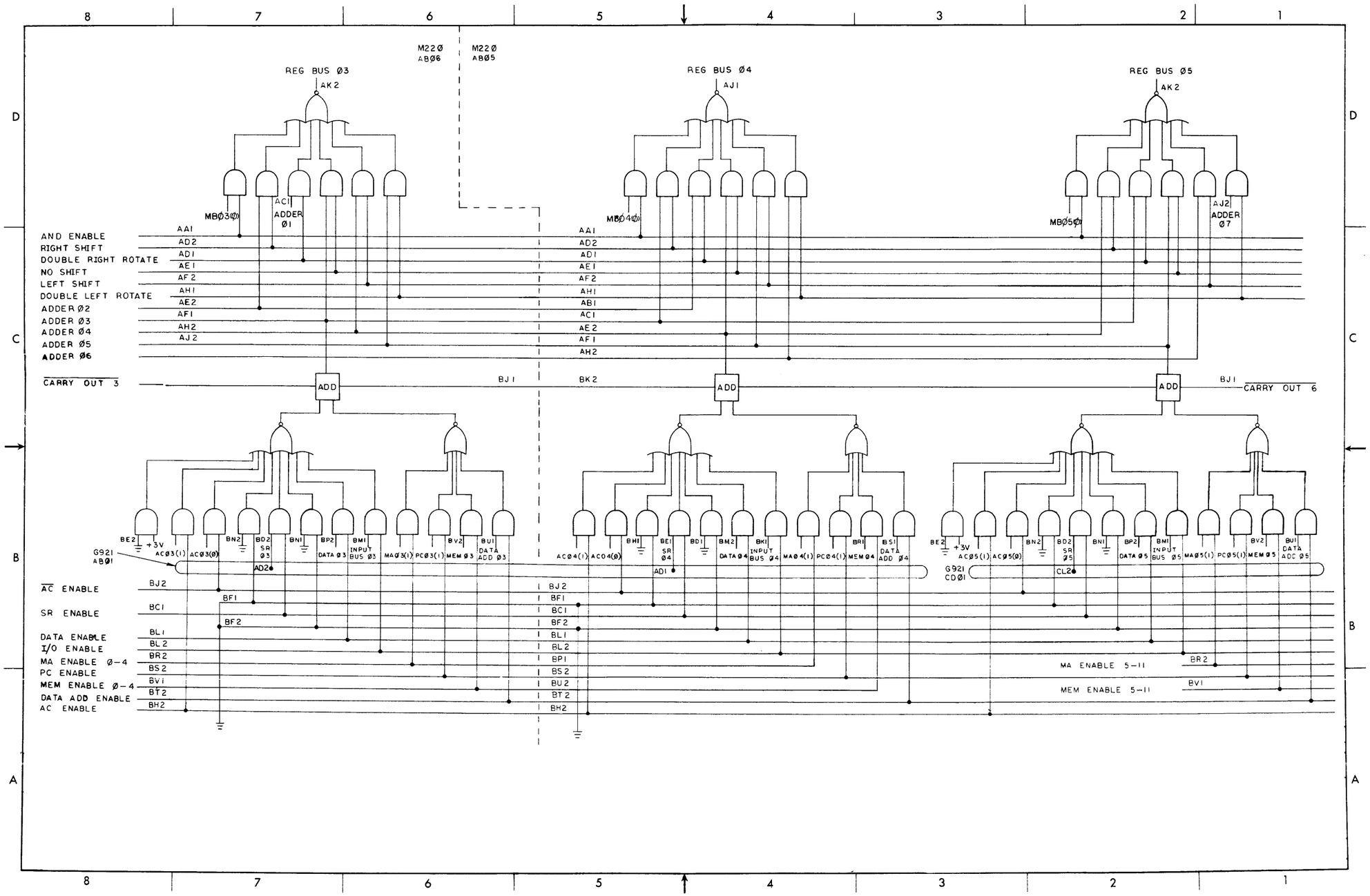

D-BS-8L-0-9 Major Register Gating (Sheet 2)

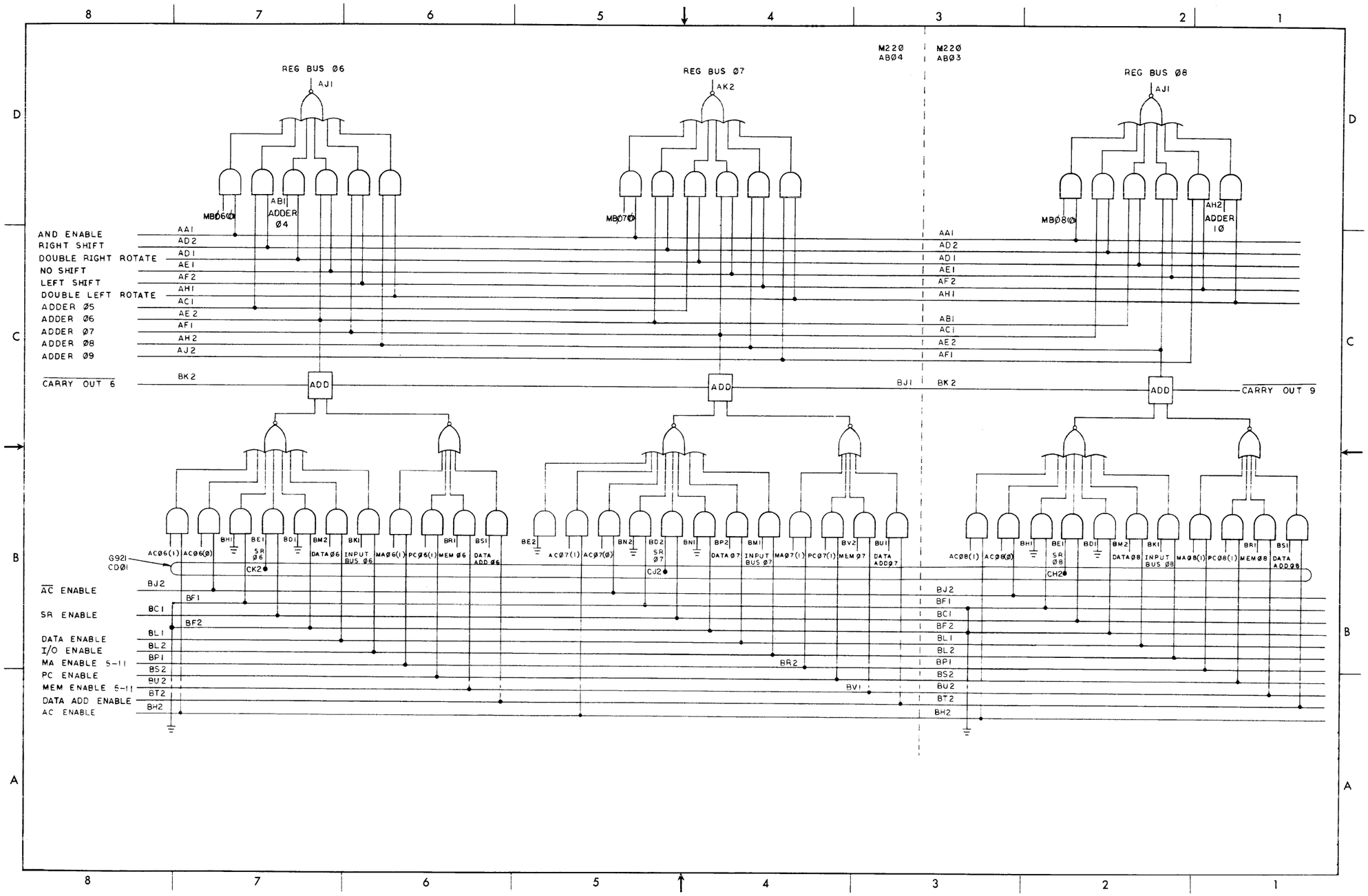

D-BS-8L-0-9 Major Register Gating (Sheet 3)

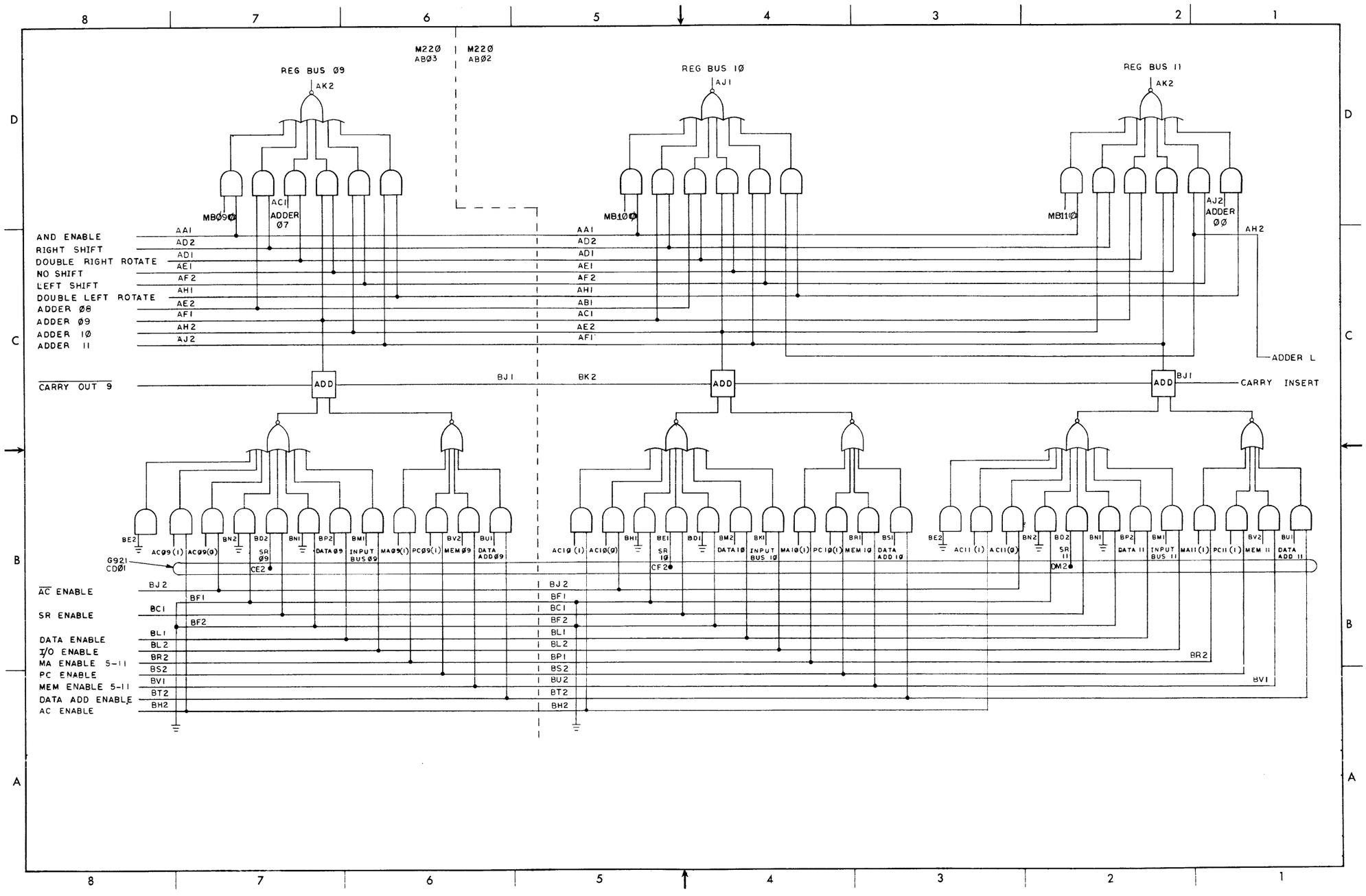

D-BS-8L-0-9 Major Register Gating (Sheet 4)

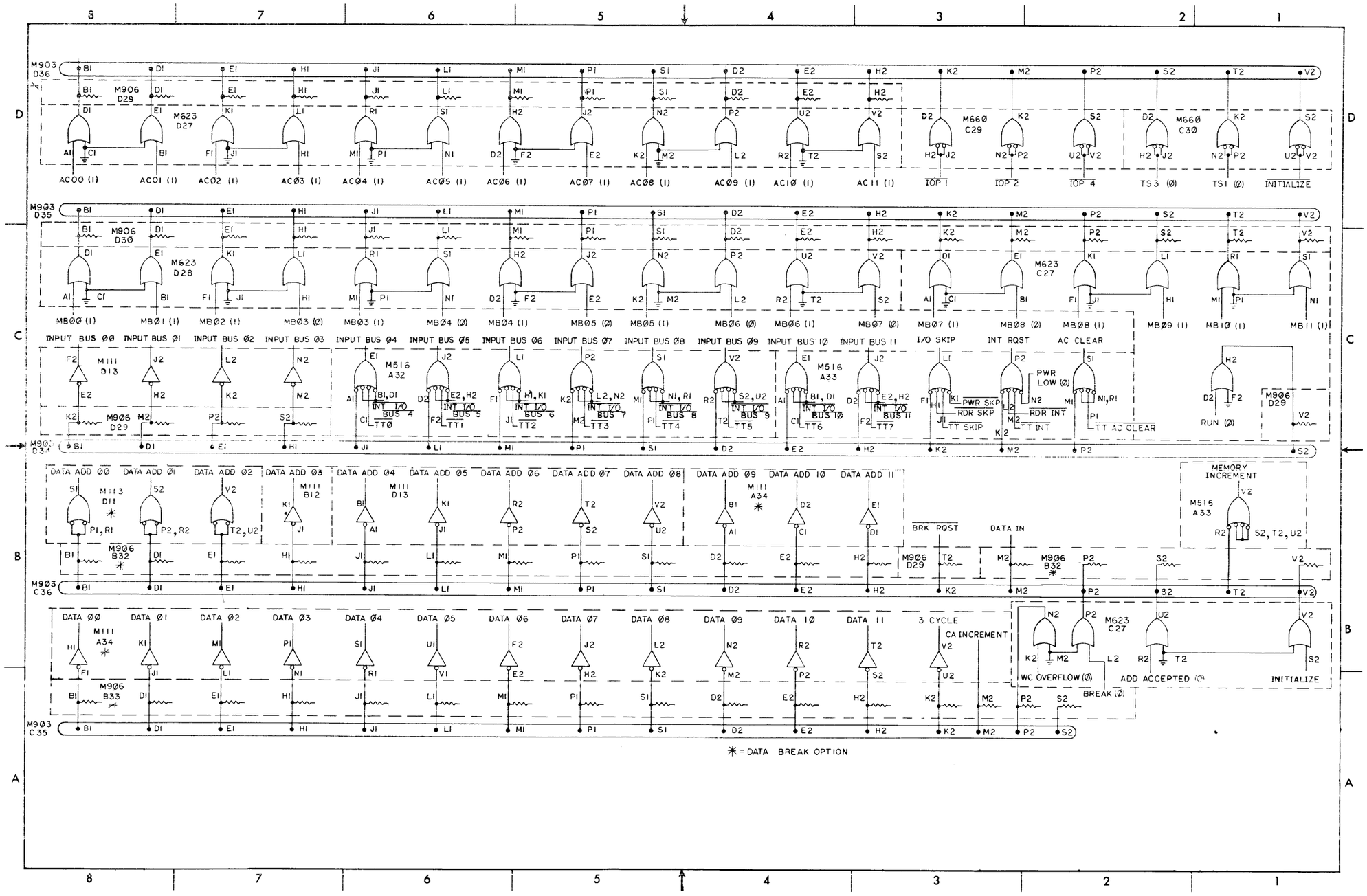

D-BS-8L-0-10 I/O Converters

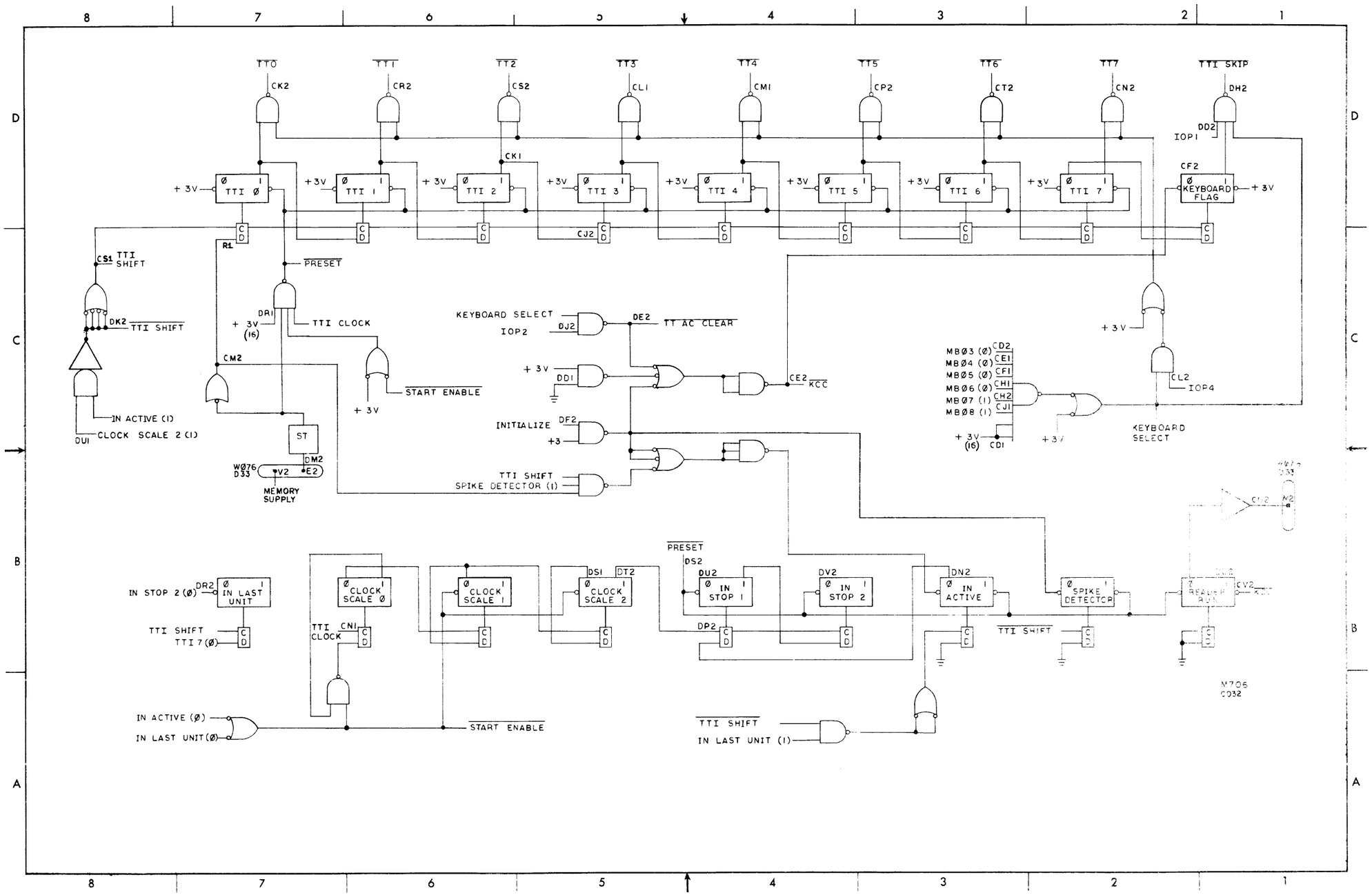

D-BS-8L-0-11 Teletype Receiver

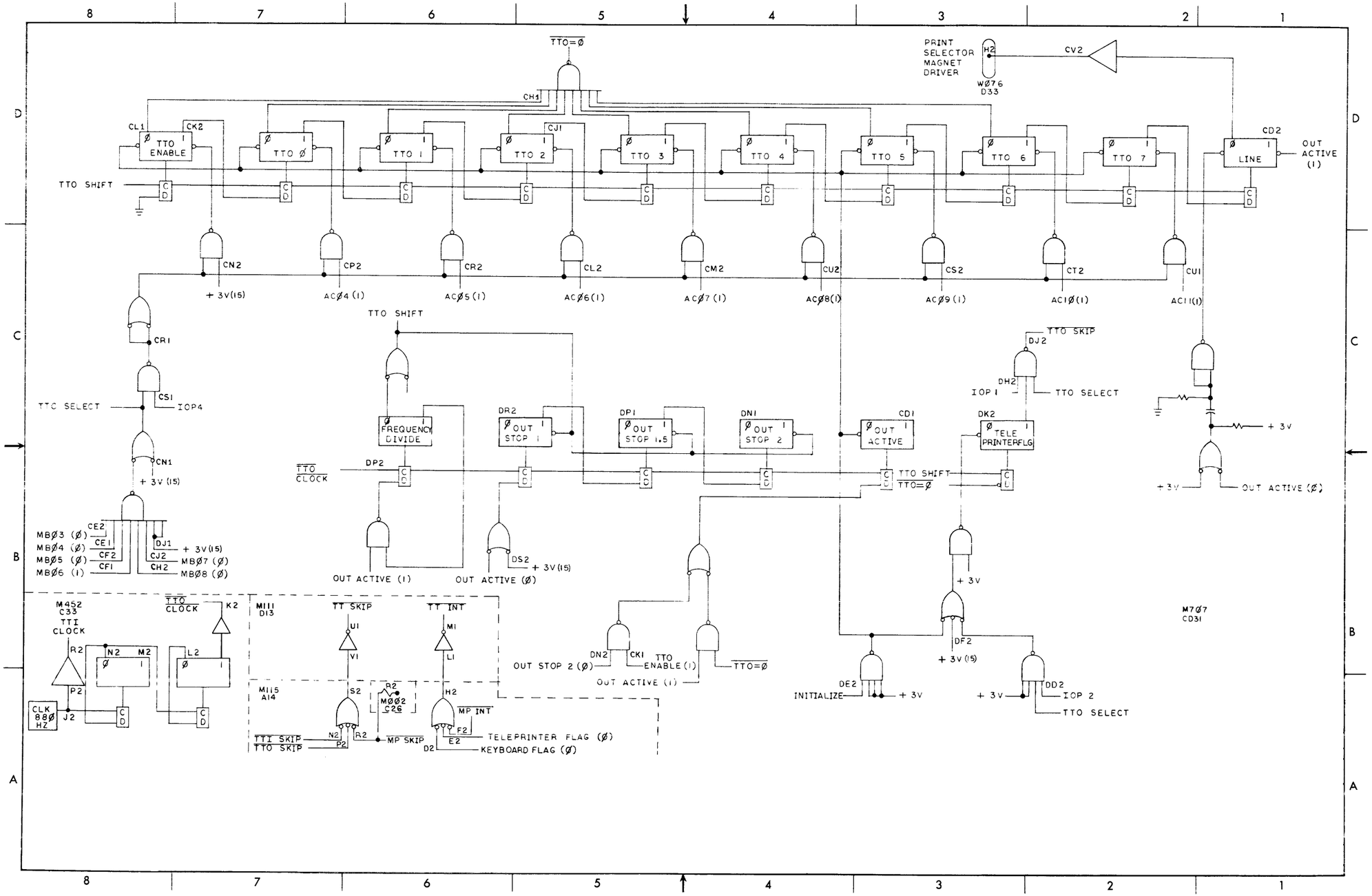

D-BS-8L-0-12 Teletype Transmitter

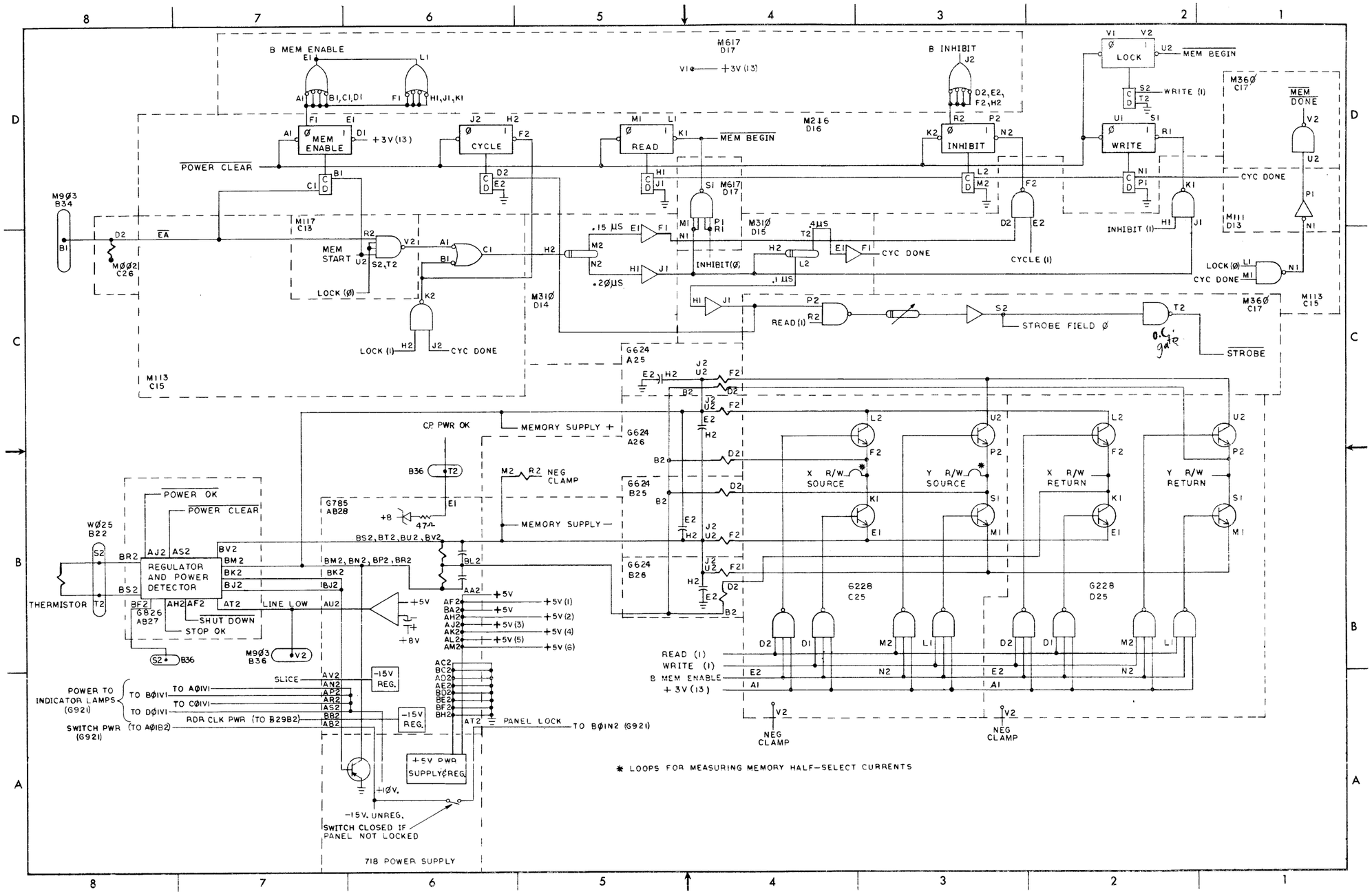

D-BS-8L-0-13 Memory Control

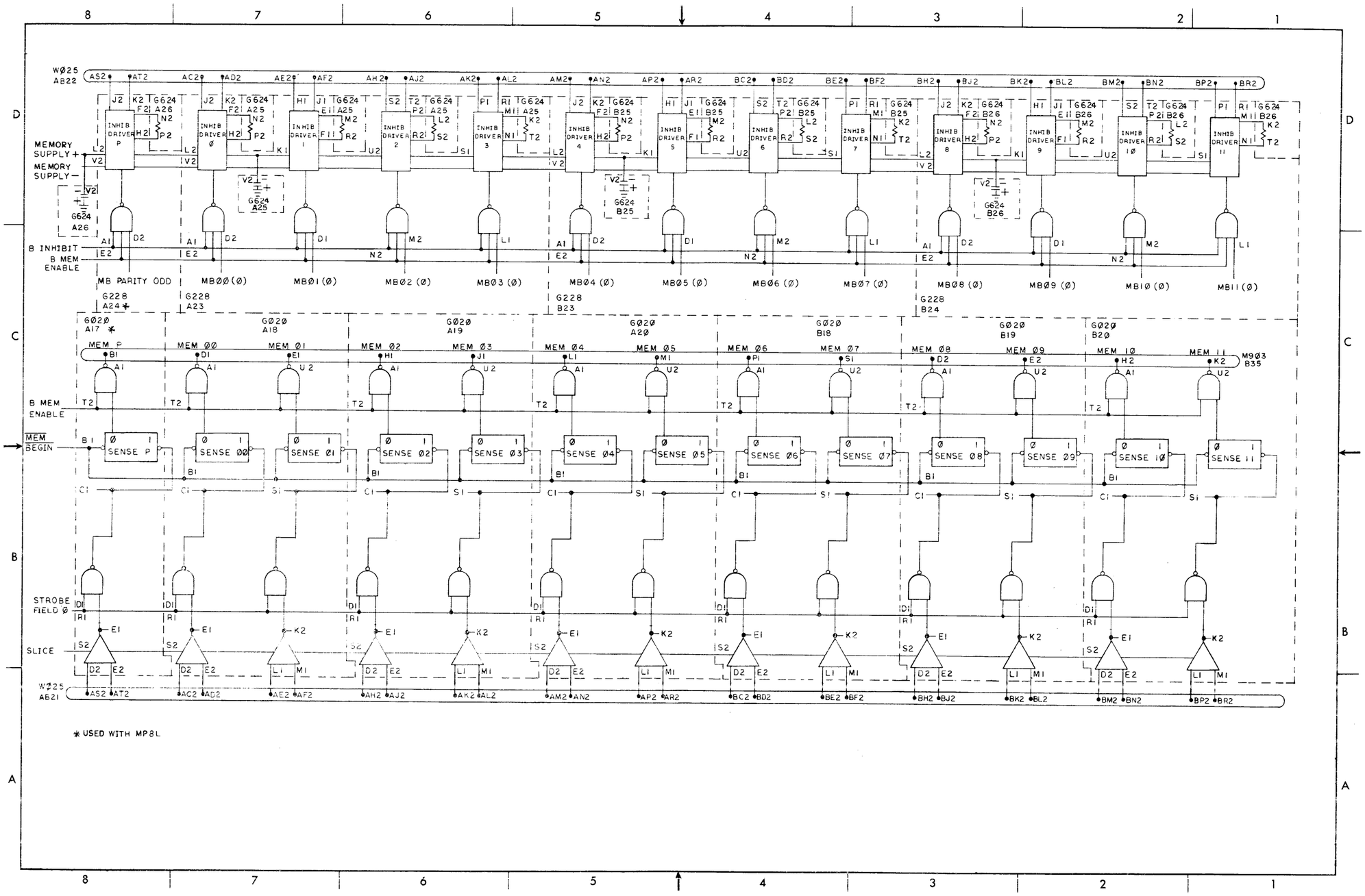

D-BS-8L-0-14 Sense Amps and Inhibit Drivers

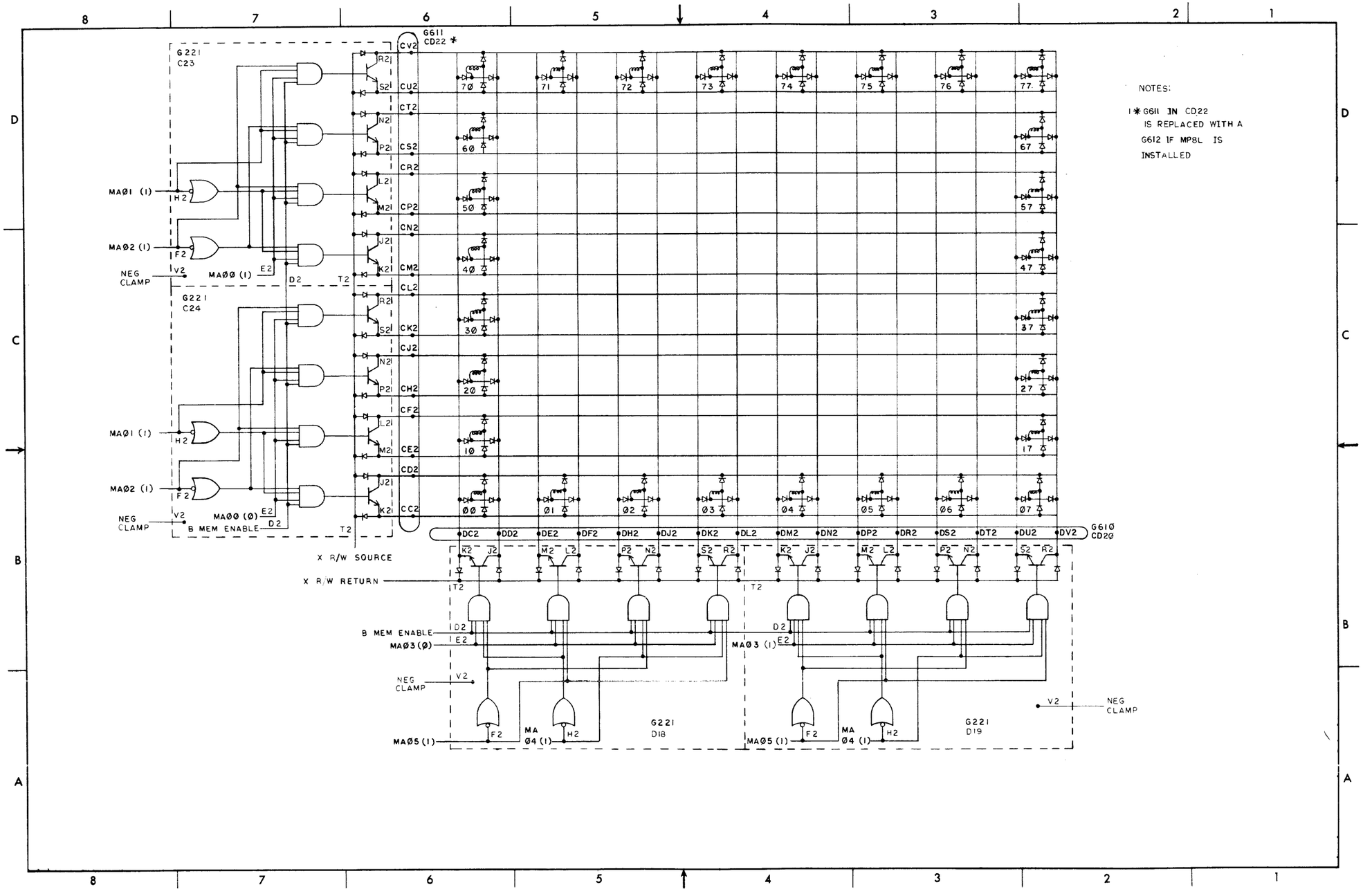

D-BS-8L-0-15 X-Axis Selection

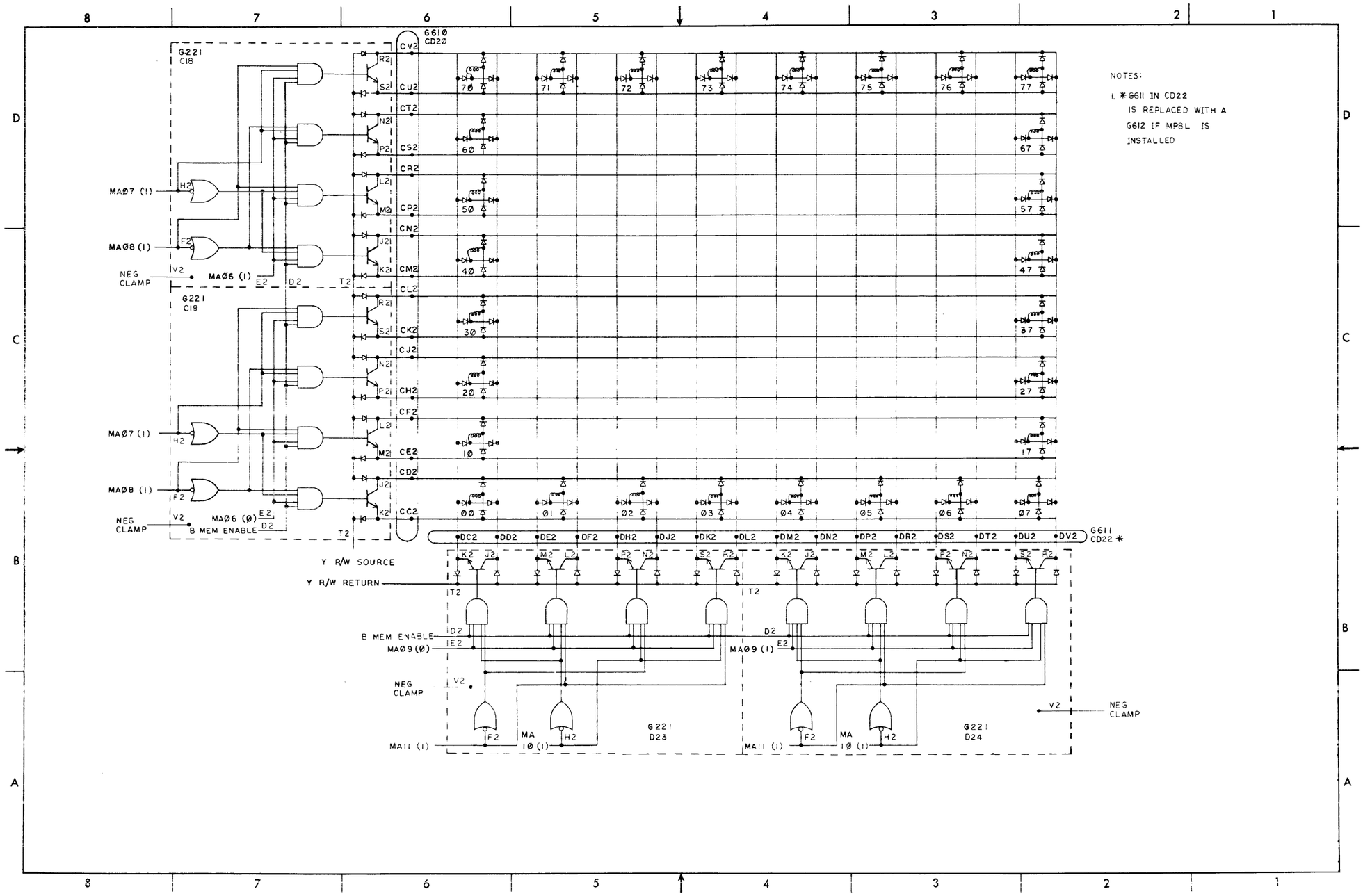

NOTES:

1. * G611 IN CD22 IS REPLACED WITH A G612 IF MPBL IS INSTALLED

D-BS-8L-0-16 Y-Axis Selection

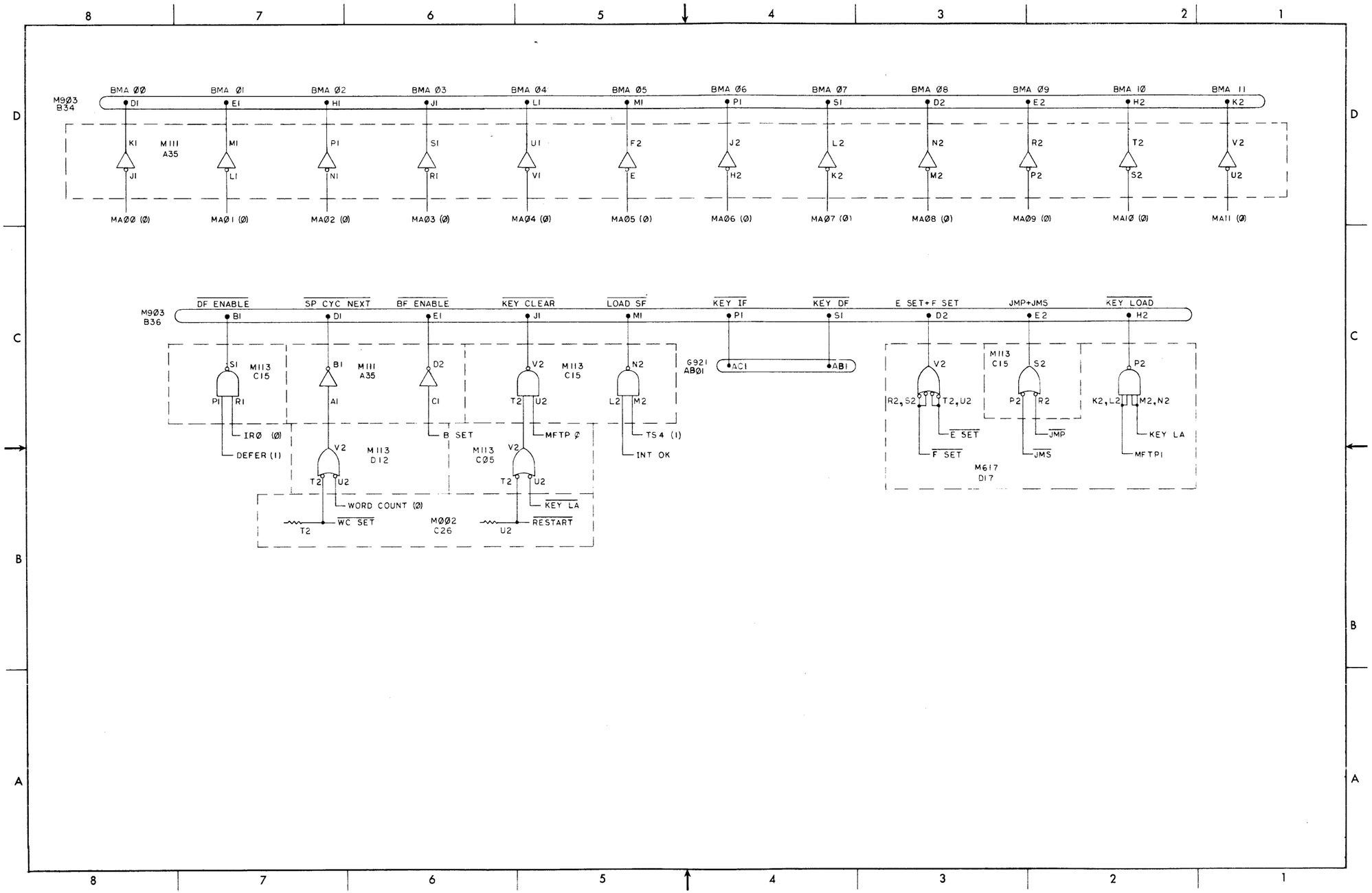

D-BS-8L-0-17 Misc. Connections MC8/L

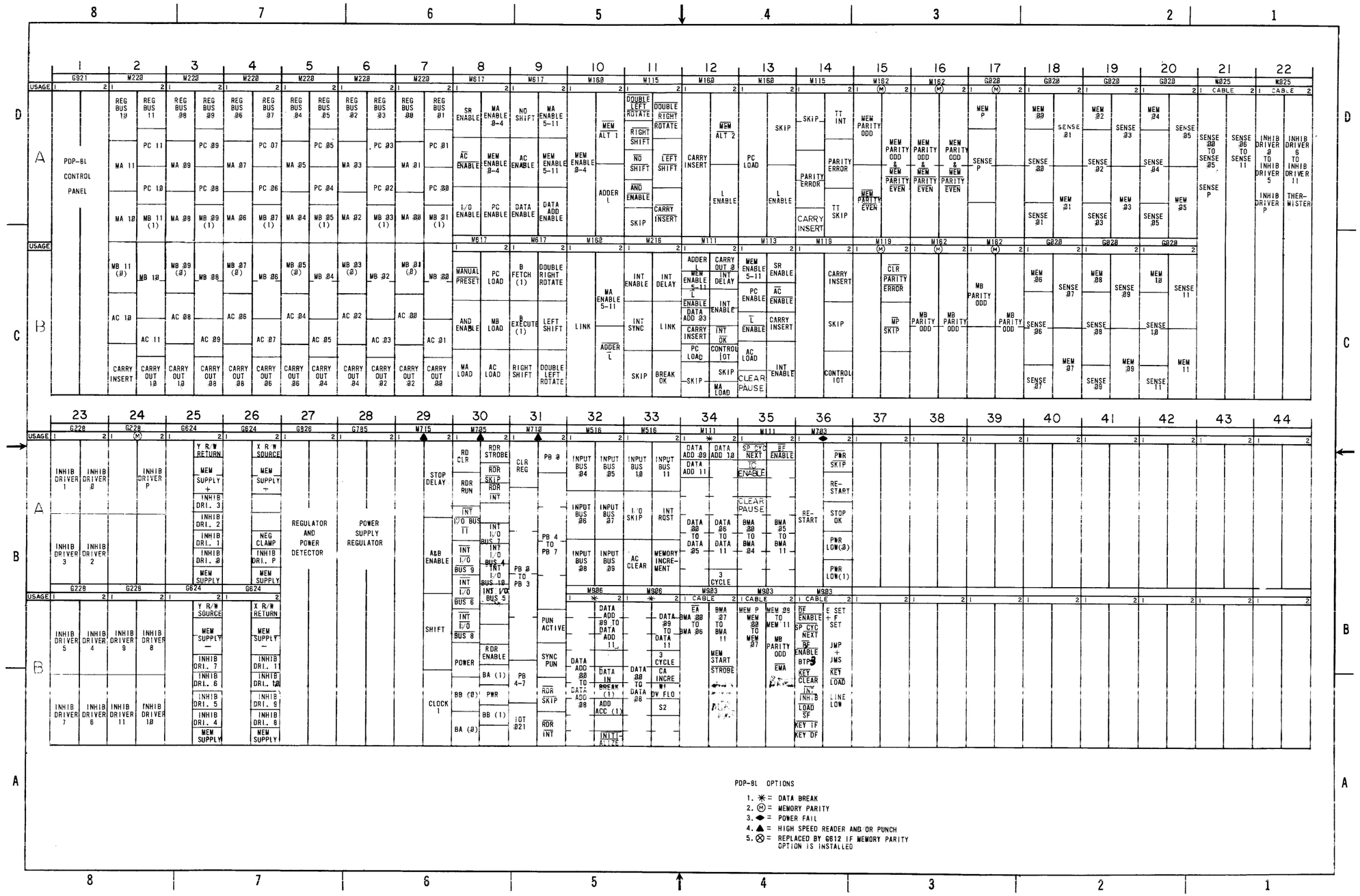

D-MU-8L-0-18 Module Utilization (Sheet 1)

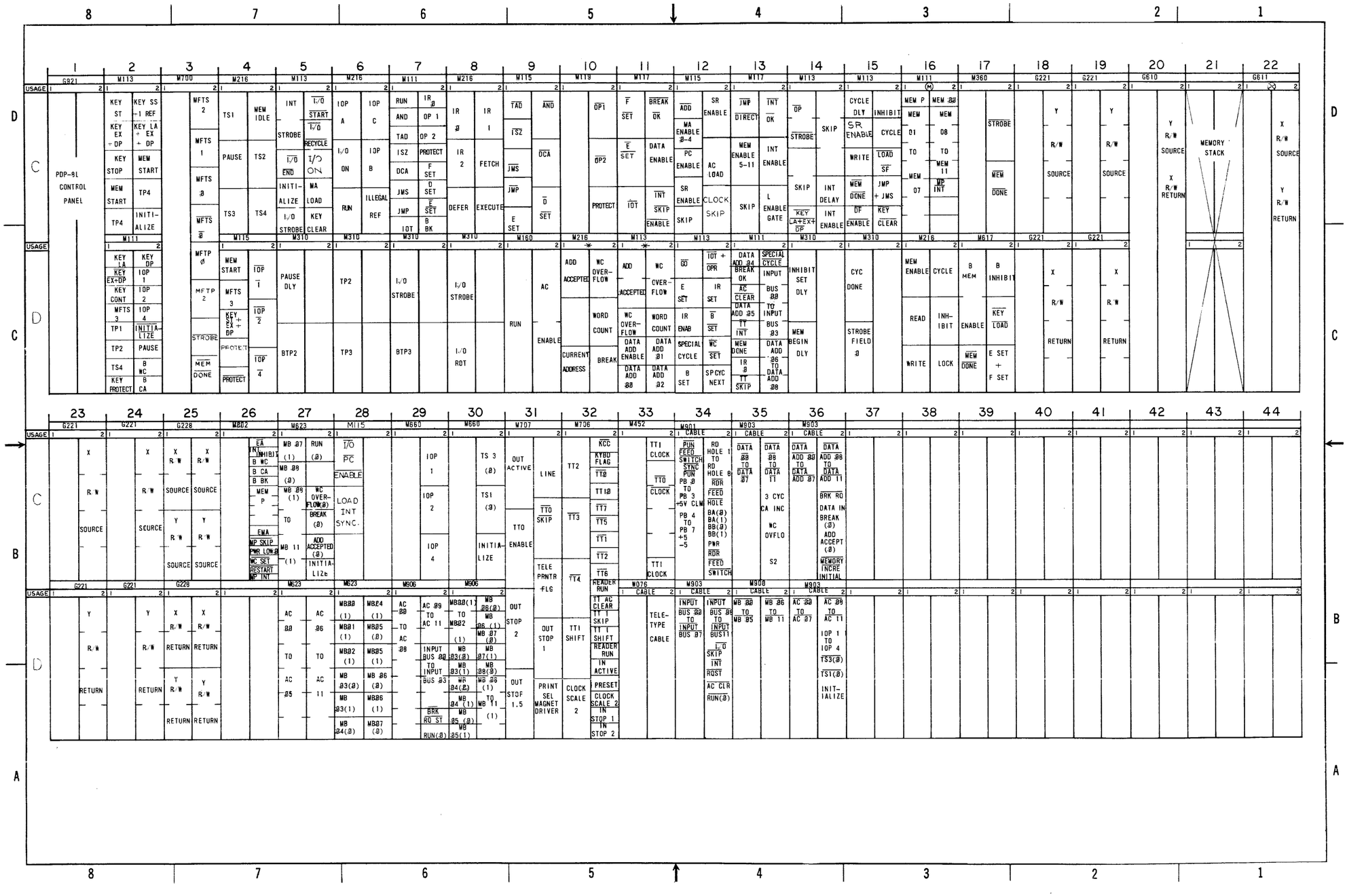

D-MU-8L-0-18 Module Utilization (Sheet 2)

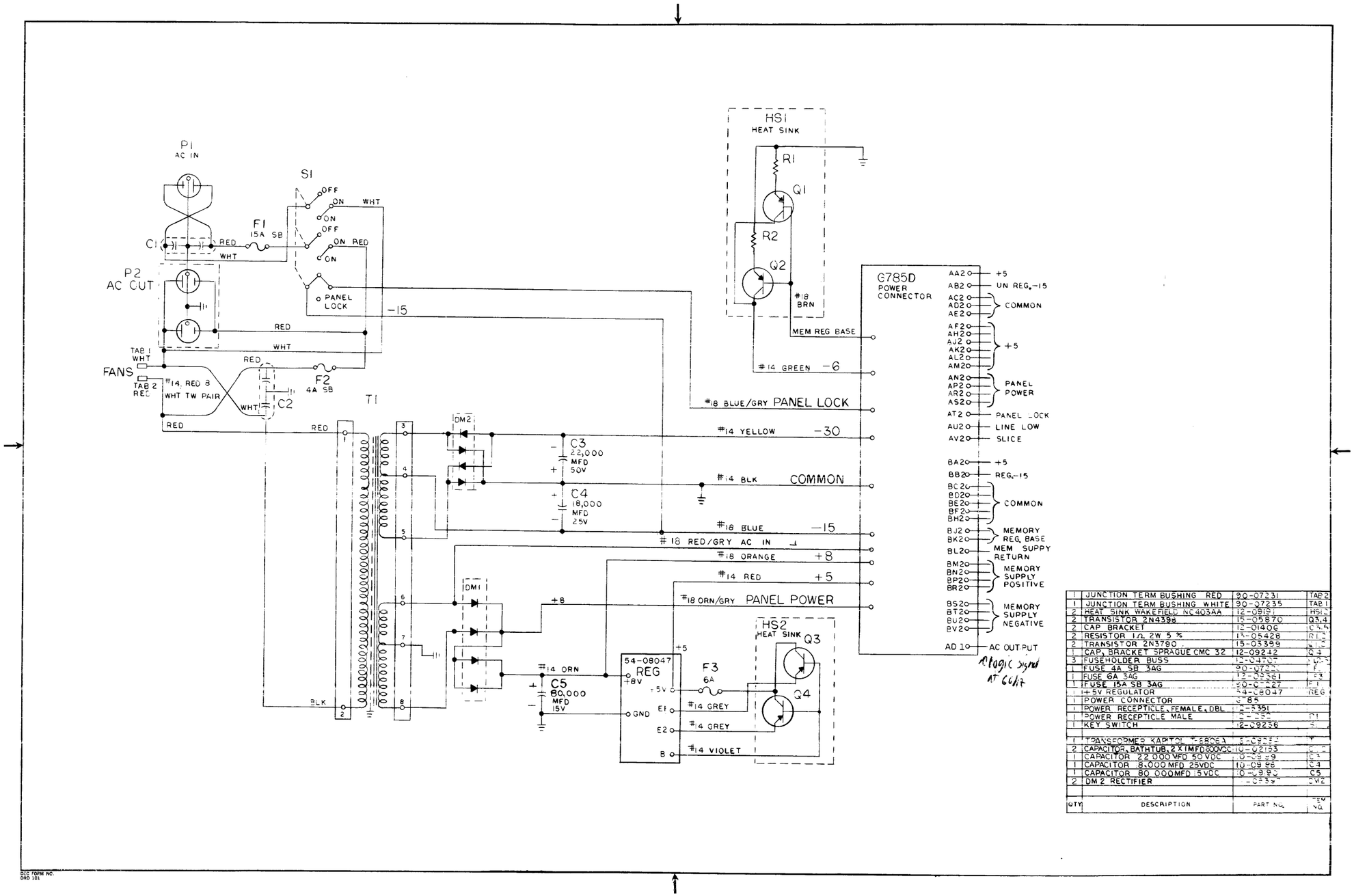

QTY	DESCRIPTION	PART NO.	REF NO.
1	JUNCTION TERM BUSHING RED	90-07231	TAB 2
1	JUNCTION TERM BUSHING WHITE	90-07235	TAB 1
2	HEAT SINK WAKEFIELD NC403AA	12-09157	HS1,2
2	TRANSISTOR 2N4398	15-05870	Q3,4
2	CAP BRACKET	12-01406	Q3,4
2	RESISTOR 1Ω 2W 5 %	13-05428	R1,2
2	TRANSISTOR 2N3790	15-03389	Q1,2
1	CAP, BRACKET SPRAGUE CMC 32	12-09242	Q1
3	FUSEHOLDER BUSS	12-04707	F1,2,3
1	FUSE 4A SB 3AG	90-07232	F2
1	FUSE 6A 3AG	12-09361	F3
1	FUSE 15A SB 3AG	90-07227	F1
1	+5V REGULATOR	54-08047	REG
1	POWER CONNECTOR	G785	
1	POWER RECEPTICLE, FEMALE, DBL	12-09351	
1	POWER RECEPTICLE MALE	12-09354	P1
1	KEY SWITCH	12-09236	S1
1	TRANSFORMER KAPTOL T-68063	21-09234	T
2	CAPACITOR, BATHTUB, 2 X 1MFD 600VDC	10-02153	C1,2
1	CAPACITOR 22,000 MFD 50 VDC	10-09159	C3
1	CAPACITOR 18,000 MFD 25VDC	10-09158	C4
1	CAPACITOR 80,000MFD 15VDC	10-09160	C5
2	DM 2 RECTIFIER	15-09337	DM2

D-CS-718-0-1 Power Supply 718

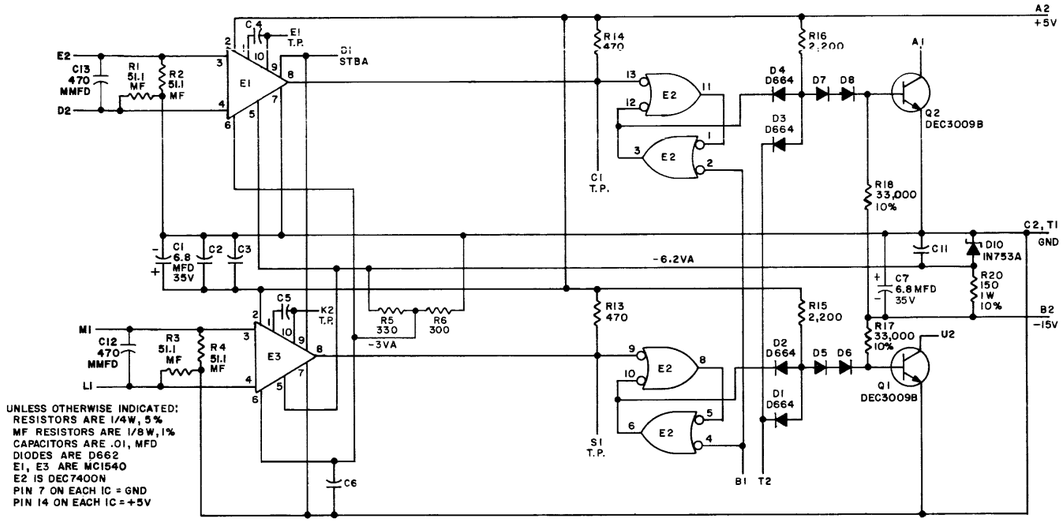

PARTS LIST IS A-PL-G020-0-0

B-CS-G020-0-1 Sense Amplifier

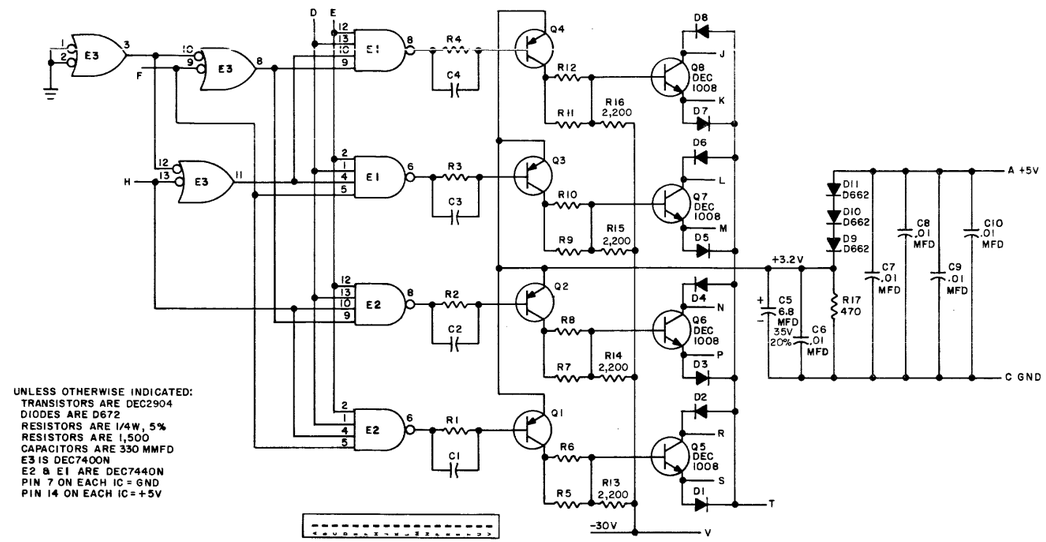

PARTS LIST IS A-PL-G221-0-1

B-CS-G221-0-1 Memory Selector

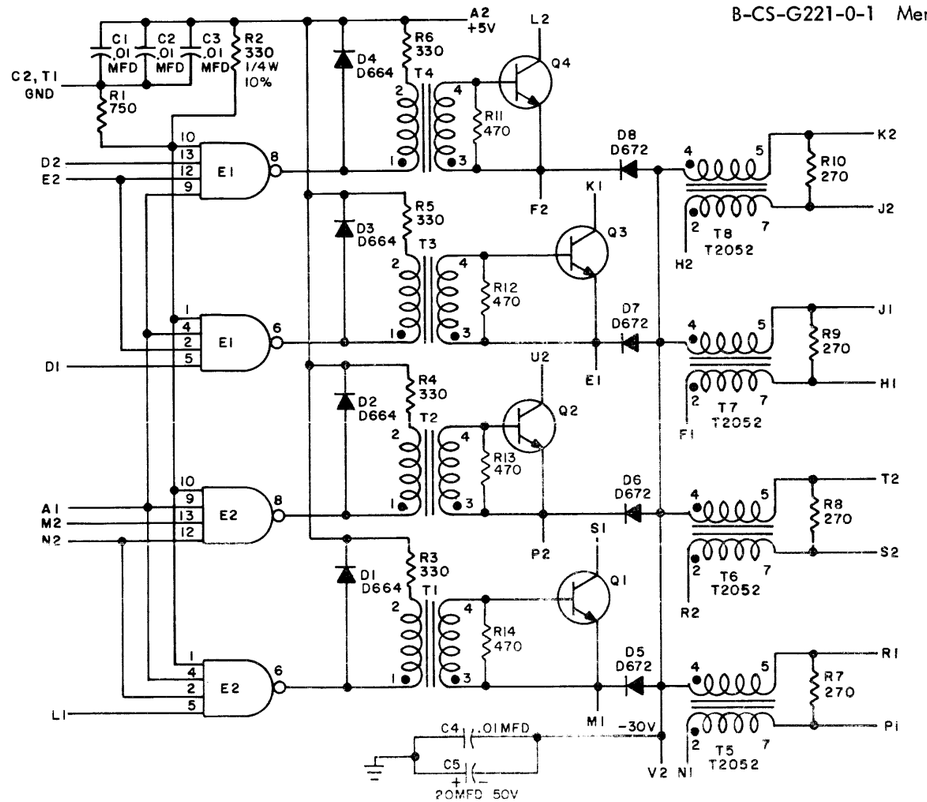

B-CS-G228-0-1 Inhibit Driver

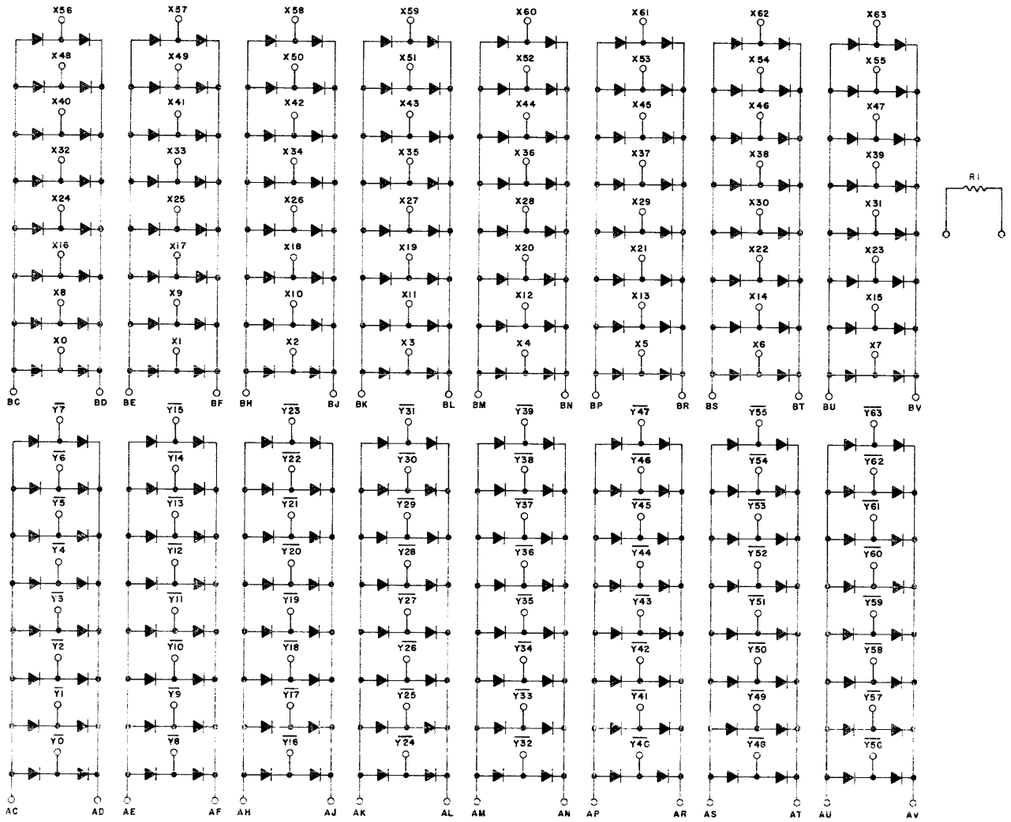

UNLESS OTHERWISE INDICATED:
DIODES ARE D672
USE D671 AS SUBSTITUTE
R1 IS A 330Ω THERMISTOR
25% #209059-8

C-CS-G610-0-1 A-Diode Board

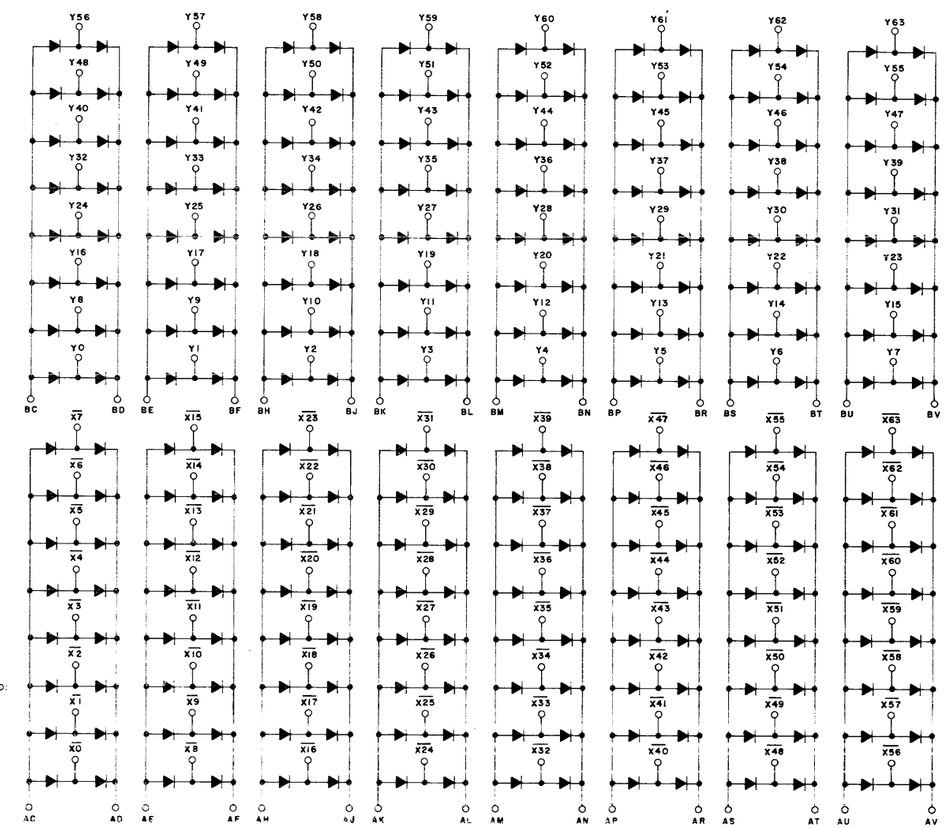

UNLESS OTHERWISE INDICATED:
DIODES ARE D672
USE D671 AS SUBSTITUTE

C-CS-G611-0-1 B-Diode Board

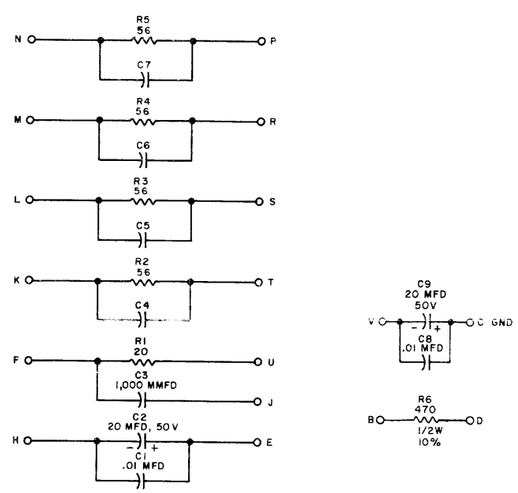

UNLESS OTHERWISE INDICATED:
CAPACITORS ARE 680 MMFD
RESISTORS ARE 10W, 1%, LOW INDUCTANCE

B-CS-G624-0-1 Resistor Board

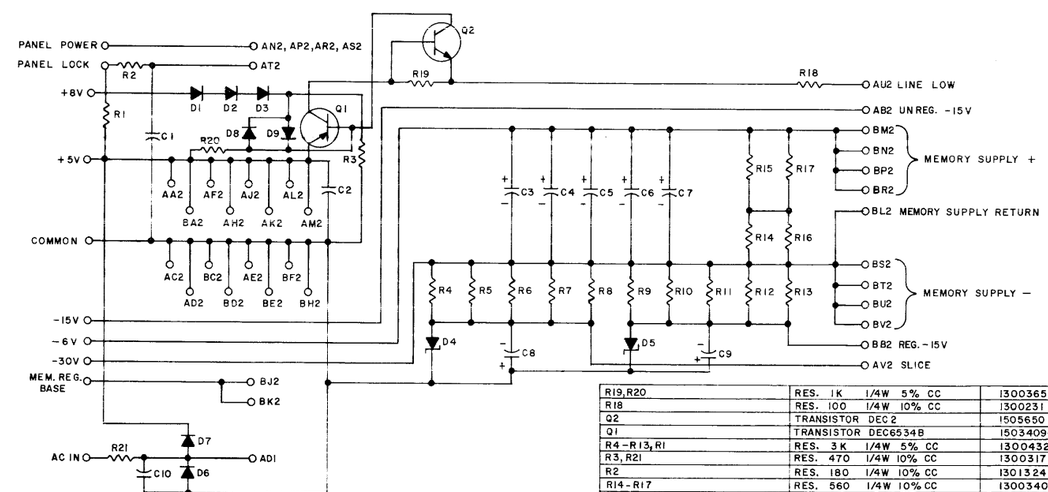

REFERENCE DESIGNATION	DESCRIPTION	PART NO.
R19, R20	RES. 1K 1/4W 5% CC	1300365
R18	RES. 100 1/4W 10% CC	1300231
Q2	TRANSISTOR DEC2	1505650
Q1	TRANSISTOR DEC6534B	1503409-01
R4-R13, R1	RES. 3K 1/4W 5% CC	1300432
R3, R21	RES. 470 1/4W 10% CC	1300317
R2	RES. 180 1/4W 10% CC	1301324
R14-R17	RES. 560 1/4W 10% CC	1300340
D4, D5	DIODE IN4744	1105648
D1-D3, D6-D9	DIODE D664	1100114
C3-C9	CAP. 20MFD 50V -10+75% ELECT	1002839
C1, C2, C10	CAP. .01MFD 100V 20% DISC	1001610
	PARTS LIST	A-PL-G785-0-0

PARTS LIST

B-CS-G785-0-1 Power Connector

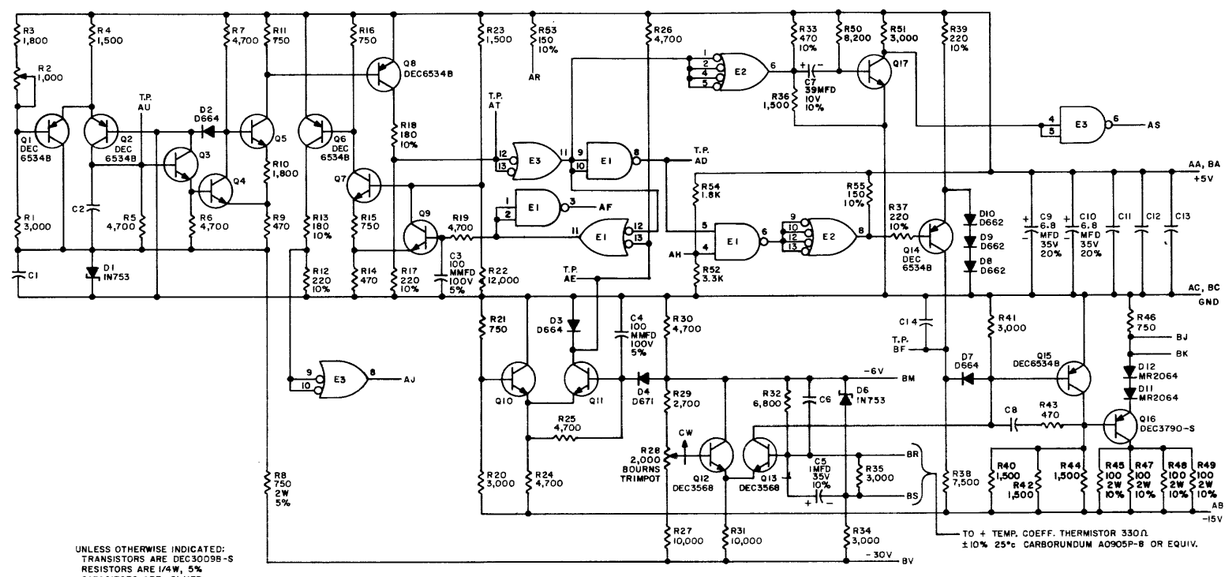

UNLESS OTHERWISE INDICATED:
TRANSISTORS ARE DEC3009B-S
RESISTORS ARE 1/4W, 5%
CAPACITORS ARE .01 MFD
E1 & E3 ARE DEC7400N
E2 IS DEC7440N
PIN 7 ON EACH IC = GND
PIN 14 ON EACH IC = +5V

C-CS-G826-0-1 Regulator Control

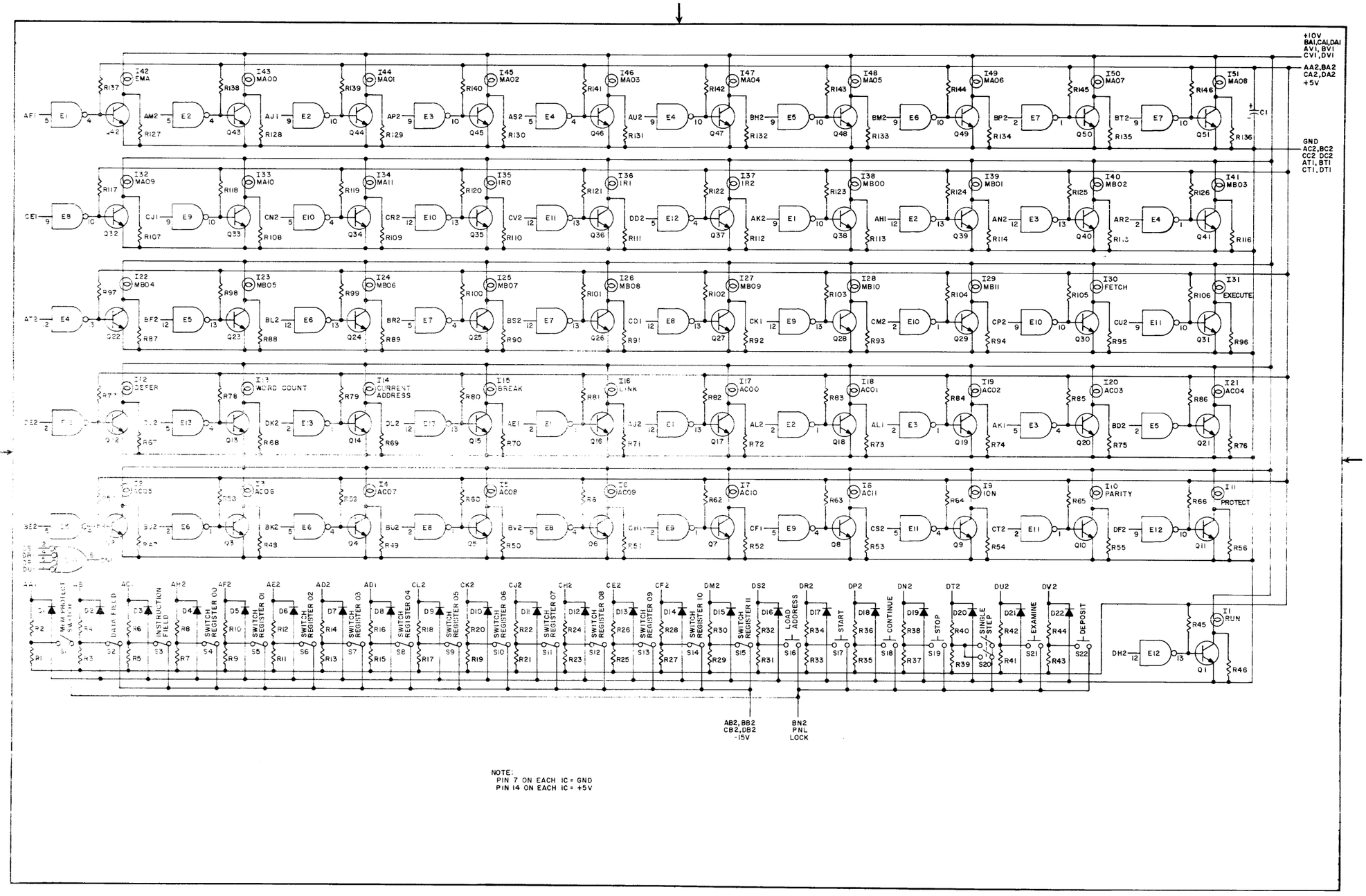

NOTE:
PIN 7 ON EACH IC = GND
PIN 14 ON EACH IC = +5V

D-CS-G921-0-1 PDP-8/L Control Panel

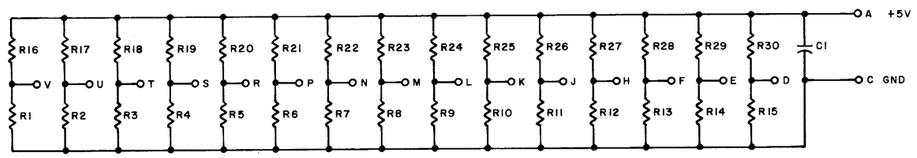

REFERENCE DESIGNATION	DESCRIPTION	PART NO.
R16-R30	RES. 1.8K 1/4W 10% CC	1301428
R1-R15	RES. 3.3K 1/4W 5% CC	1300439
C1	CAP. .01MFD 100V 20% DISC	1001610
	PARTS LIST	A-PL-M002-0-0

PARTS LIST

B-CS-M002-0-1 15 Loads

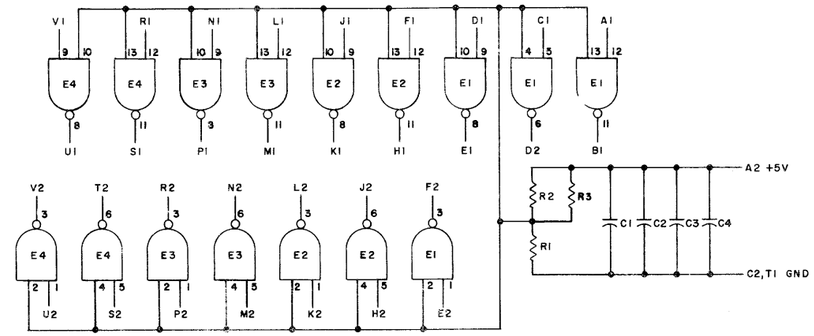

NOTES:
PIN 7 ON EACH IC = GND
PIN 14 ON EACH IC = +5V

REFERENCE DESIGNATION	DESCRIPTION	PART NO.
E1-E4	INTEGRATED CKT. DEC7400N	1905575
R1-R3	RES. 750 1/4W 5% CC	1301401
C1-C4	CAP. .01MFD 100V 20% DISC	1001610
	PARTS LIST	A-PL-M111-0-0

PARTS LIST

B-CS-M111-0-1 Inverter

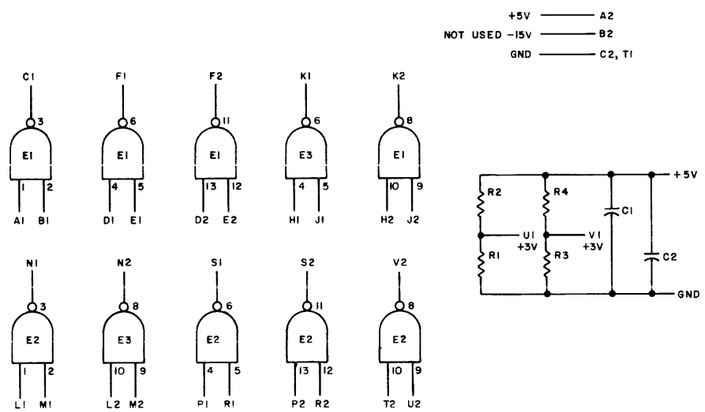

NOTES:
PIN 7 ON EACH IC = GND
PIN 14 ON EACH IC = +5V

REFERENCE DESIGNATION	DESCRIPTION	PART NO.
E1 THRU E3	INTEGRATED CKT. DEC7400N	1905575
R1 AND R3	RES. 750 1/4W 5% CC	1301401
R2 AND R4	RES. 330 1/4W 10% CC	1300293
C1 AND C2	CAP. .01MFD 100V 20% DISC	1001610
	PARTS LIST	A-PL-M113-0-0

PARTS LIST

B-CS-M113-0-1 10 2-Input NAND Gates

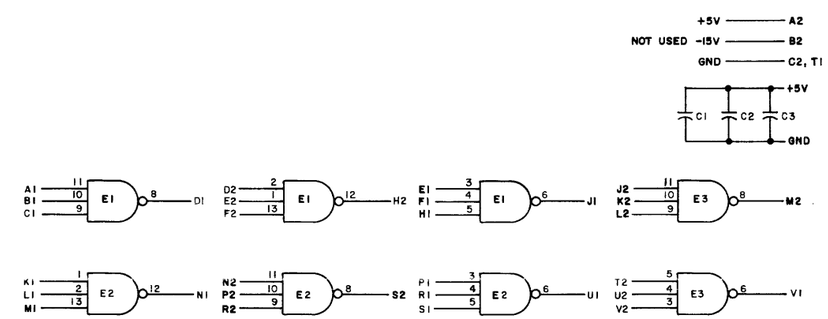

NOTES:
PIN 7 ON EACH IC = GND
PIN 14 ON EACH IC = +5V

REFERENCE DESIGNATION	DESCRIPTION	PART NO.
E1 THRU E3	INTEGRATED CKT. DEC7410N	1905576
C1 THRU C3	CAP. .01MFD 100V 20% DISC	1001610
	PARTS LIST	A-PL-M115-0-0

PARTS LIST

B-CS-M115-0-1 8 3-Input NAND Gates

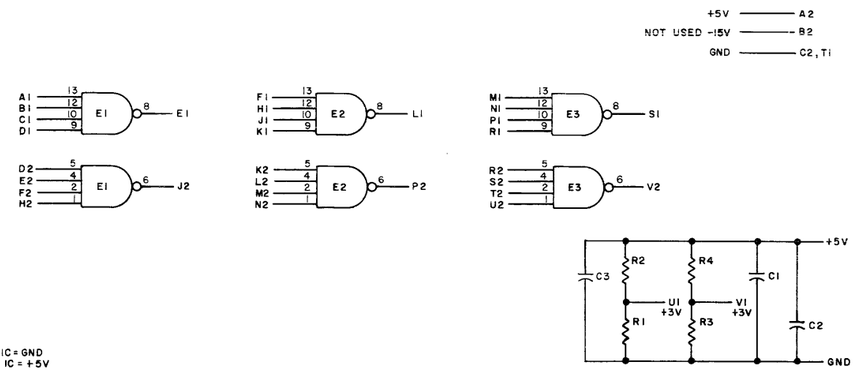

NOTES:
PIN 7 ON EACH IC = GND
PIN 14 ON EACH IC = +5V

E1 THRU E3	INTEGRATED CKT. DEC7420N	1905577
R1 & R3	RES. 750 1/4W 5% CC	1301401
R2 & R4	RES. 330 1/4W 10% CC	1300293
C1 THRU C3	CAP. .01MFD 100V 20% DISC	1001610
	PARTS LIST	A-PL-M117-0-0
REFERENCE DESIGNATION	DESCRIPTION	PART NO.

PARTS LIST

B-CS-M117-0-1 6 4-Input NAND Gates

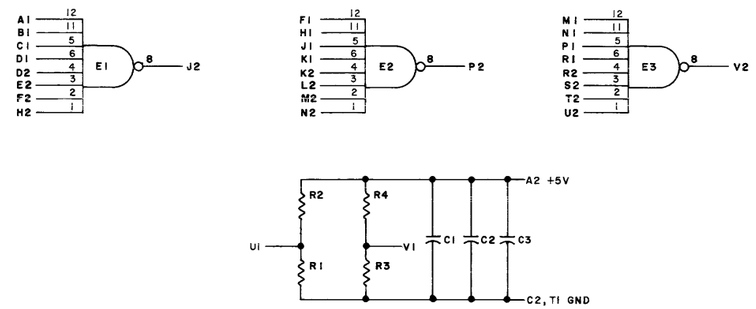

NOTES:
PIN 7 ON EACH IC = GND
PIN 14 ON EACH IC = +5V

E1 THRU E3	INTEGRATED CKT. DEC7430N	1905578
R2 & R4	RES. 330 1/4W 10% CC	1300293
R1 & R3	RES. 750 1/4W 5% CC	1301401
C1 THRU C3	CAP. .01MFD 100V 20% DISC	1001610
	PARTS LIST	A-PL-M119-0-0
REFERENCE DESIGNATION	DESCRIPTION	PART NO.

PARTS LIST

B-CS-M119-0-1 3 8-Input NAND Gates

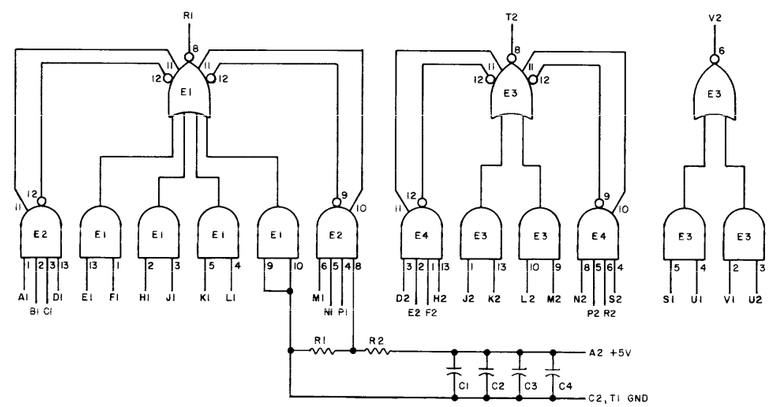

NOTES
PIN 7 ON EACH IC = GND
PIN 14 ON EACH IC = +5V

E3	INTEGRATED CKT. DEC7450N	1905580
E1	INTEGRATED CKT. DEC7453N	1905582
E2 & E4	INTEGRATED CKT. DEC7460N	1905581
R2	RES. 4.7K 1/4W 10% CC	1300448
R1	RES. 6.8K 1/4W 10% CC	1300463
C1 THRU C4	CAP. .01MFD 100V 20% DISC	1001610
	PARTS LIST	A-PL-M160-0-0
REFERENCE DESIGNATION	DESCRIPTION	PART NO.

PARTS LIST

B-CS-M160-0-1 Gate Module

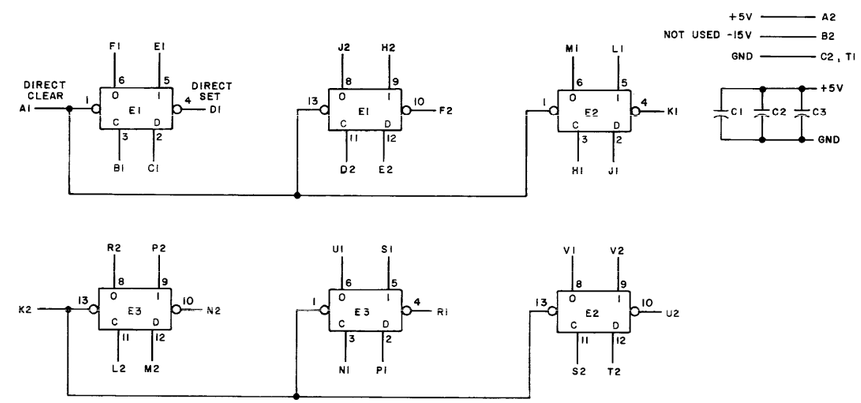

NOTES:
PIN 7 ON EACH IC = GND
PIN 14 ON EACH IC = +5V

E1 THRU E3	INTEGRATED CKT. DEC7474N	1905547
C1 THRU C3	CAP. .01MFD 100V 20% DISC	1001610
	PARTS LIST	A-PL-M216-0-0
REFERENCE DESIGNATION	DESCRIPTION	PART NO.

PARTS LIST

B-CS-M216-0-1 Six Flip-Flops

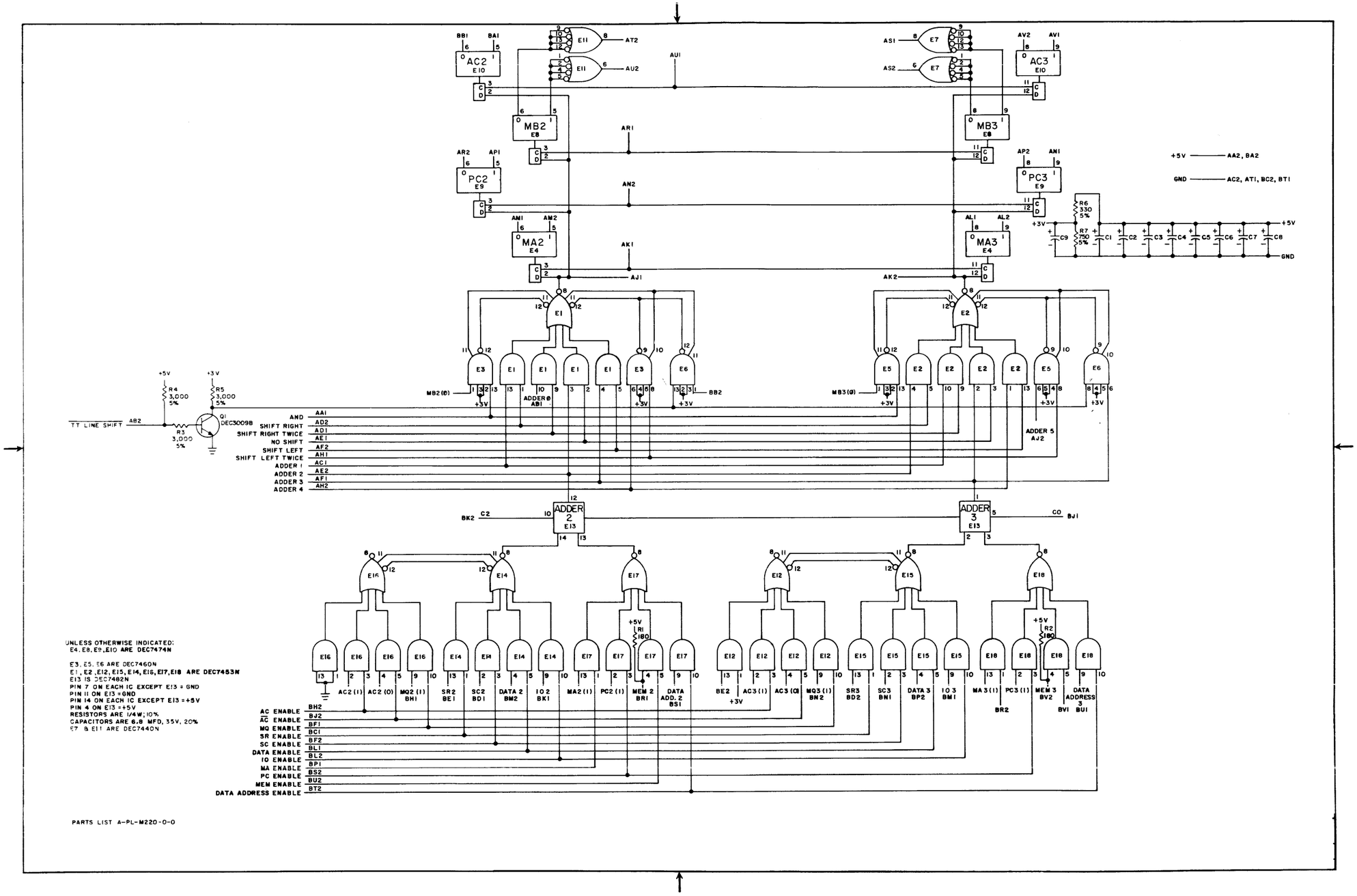

D-CS-M220-0-1 Major Registers

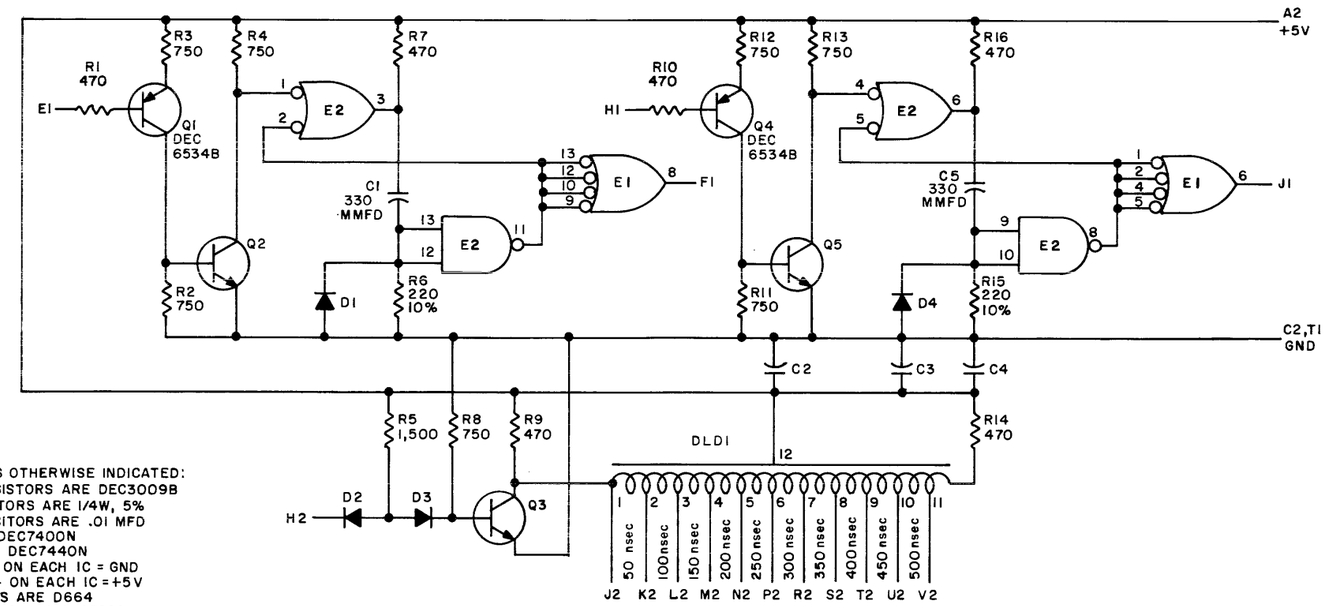
A2
+5V
C2,T1
GND
R1 470
R2 750
R3 750
R4 750
R5 1,500
R6 220 10%
R7 470
R8 750
R9 470
R10 470
R11 750
R12 750
R13 750
R14 470
R15 220 10%
R16 470
C1 330 MMFD
C2
C3
C4
C5 330 MMFD
D1
D2
D3
D4
Q1 DEC 6534B
Q2
Q3
Q4 DEC 6534B
Q5
E1
E2
E1
E2
E1
E2

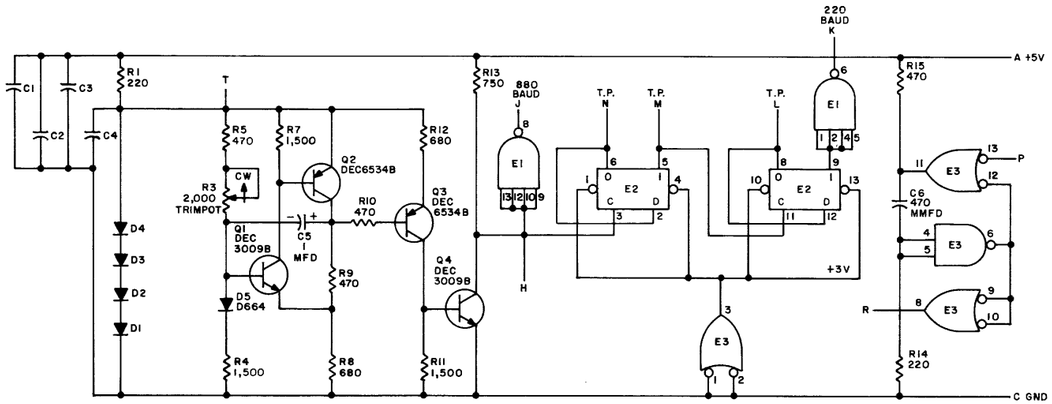

UNLESS OTHERWISE INDICATED:
RESISTORS ARE 1/4W, 5%
CAPACITORS ARE .01 MFD
C5 IS 35V, 10%, TANT.
DIODES ARE D662
E1 IS DEC7440N
E2 IS DEC7474N
E3 IS DEC7400N
PIN 7 ON EACH IC = GND
PIN 14 ON EACH IC = +5V
R3 IS A #275P

B-CS-M452-0-1 Variable Clock

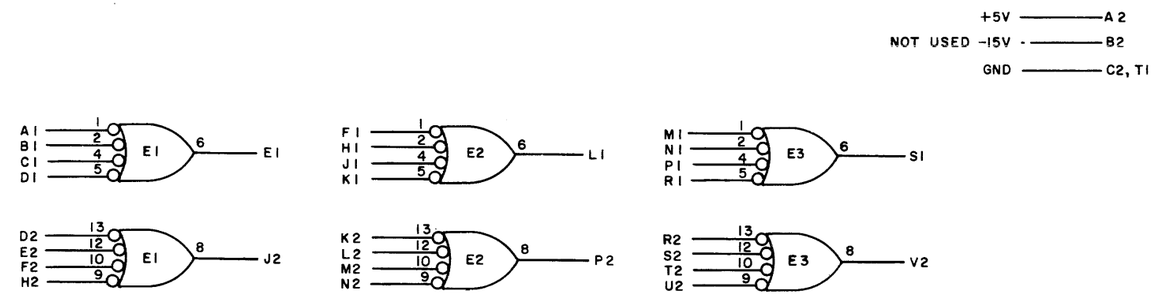

NOTES:
PIN 7 ON EACH IC = GND
PIN 14 ON EACH IC = +5V
USE THE ETCH BOARD OF THE M117

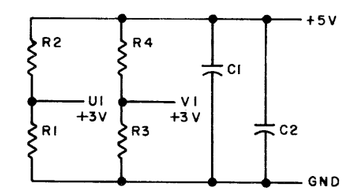

B-CS-M617-0-1 6 4-Input NOR Buffers

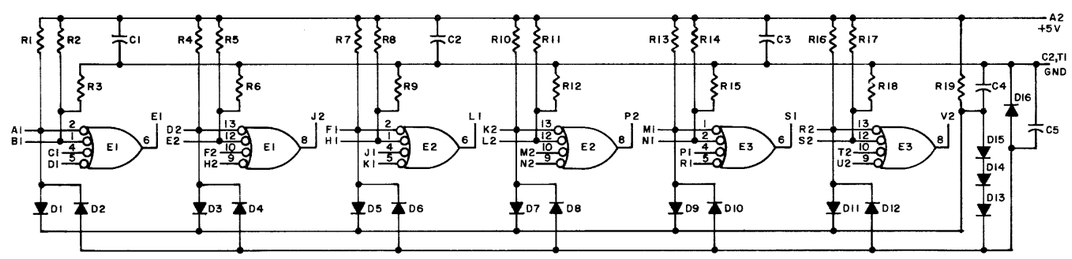

NOTES:
PIN 7 ON EACH IC = GND
PIN 14 ON EACH IC = +5V

REFERENCE DESIGNATION	DESCRIPTION	PART NO.
E1-E3	INTEGRATED CKT. DEC7420N	1905577
R19	RES. 330 1/4W 5% CC	1300295
R3,R6,R9,R12,R15,R18	RES. 1.5K 1/4W 5% CC	1300391
R2,R5,R8,R11,R14,R17	RES. 750 1/4W 5% CC	1301401
R1,R4,R7,R10,R13,R16	RES. 220 1/4W 5% CC	1300271
D13-D16	DIODE D662	1100113
D1-D12	DIODE D664	1100114
C1-C5	CAP. .01MFD 100V 20% DISC	1001610
	PARTS LIST	A-PL-M516-0-0

PARTS LIST

B-CS-M516-0-1 Positive Bus Receiver

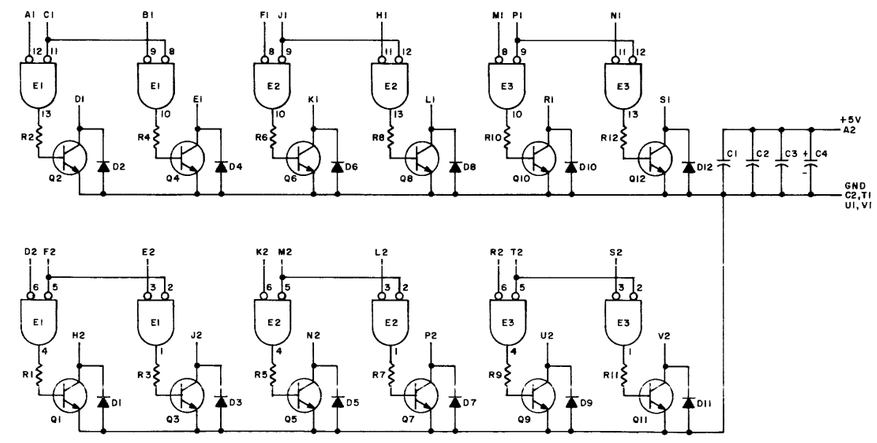

NOTES:
PIN 7 ON EACH IC = GND
PIN 14 ON EACH IC = +5V

REFERENCE DESIGNATION	DESCRIPTION	PART NO.
E1-E3	INTEGRATED CKT. DEC7402N	1909004
Q1-Q12	TRANSISTOR DEC3009B	1503100
R1-R12	RES. 390 1/4W 5% CC	1300309
D1-D12	DIODE D664	1100114
C4	CAP. 6.8MFD 35V 20% S.TANT	1000067
C1-C3	CAP. .01MFD 100V 20% DISC	1001610
	PARTS LIST	A-PL-M623-0-0

PARTS LIST

C-CS-M623-0-1 Bus Driver

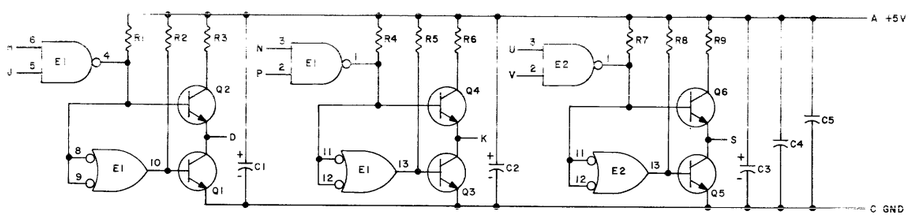

NOTES:
PIN 7 ON EACH IC = GND
PIN 14 ON EACH IC = +5V

B-CS-M660-0-1 Positive Level Driver

UNLESS OTHERWISE INDICATED:
TRANSISTORS ARE DEC30098
CAPACITORS ARE .01 MFD
RESISTORS ARE 1/4W, 5%
E1 IS DEC7474N
E2, E3, E4, E5, E6, E7, E8 ARE DEC7400N
PIN 7 ON EACH IC = GND
PIN 14 ON EACH IC = +5V

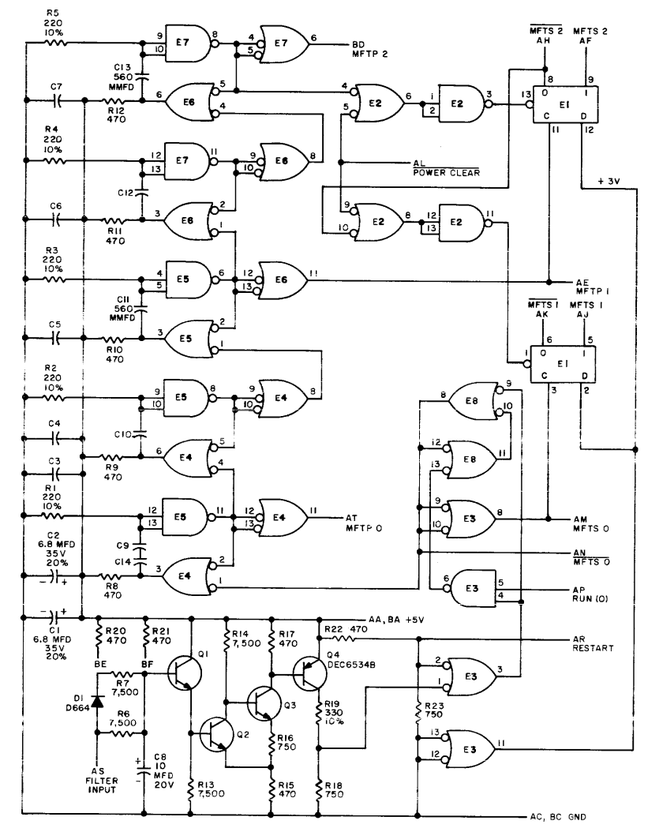

PARTS LIST A-PL-M700-0-0

C-CS-M700-0-1 Manual Timing Generator

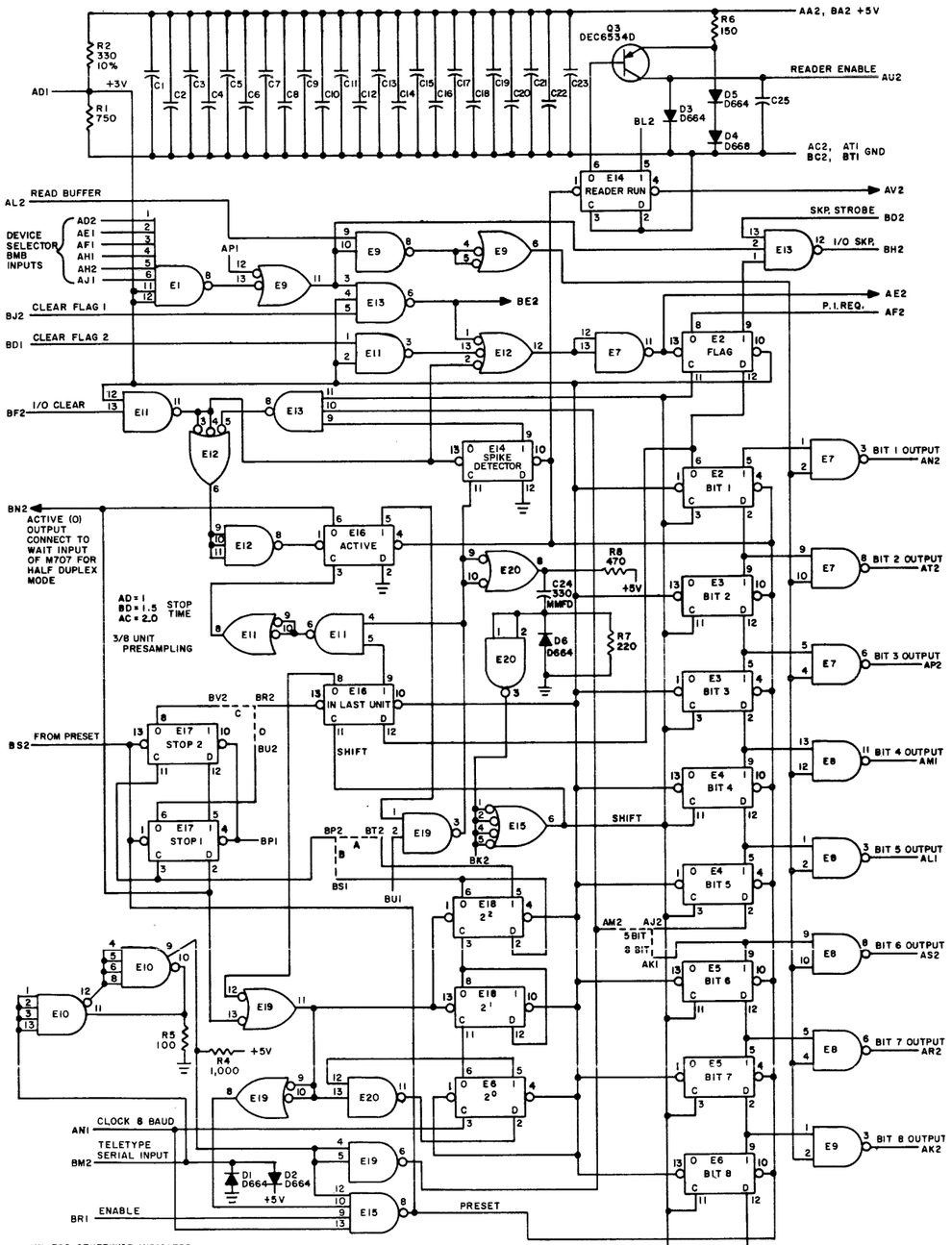

C-CS-M706-0-1 Teletype Receiver

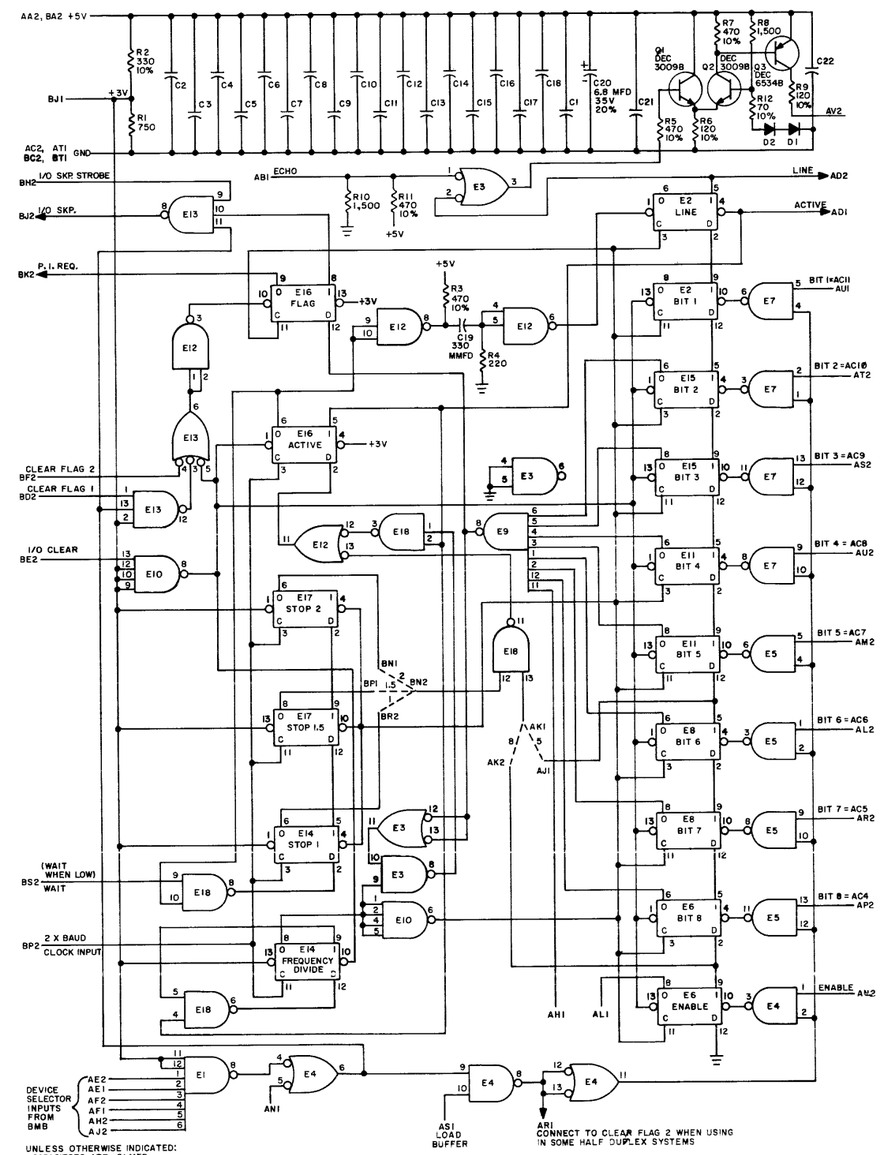

C-CS-M707-0-1 Teletype Transmitter

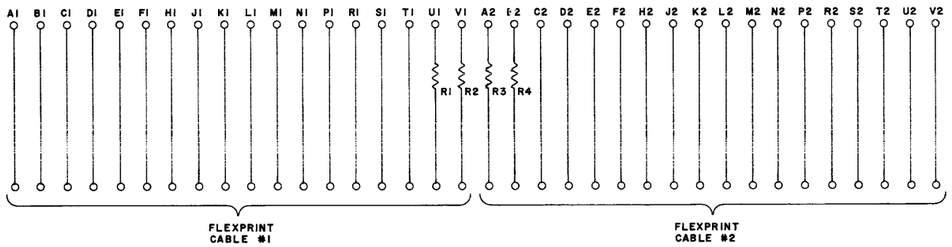

R1-R4	RES. 10 1/4W 10% CC	1300170
	PARTS LIST	A-PL-M901-0-0
REFERENCE DESIGNATION	DESCRIPTION	PART NO.

PARTS LIST

B-CS-M901-0-1 Flexprint Cable Connector

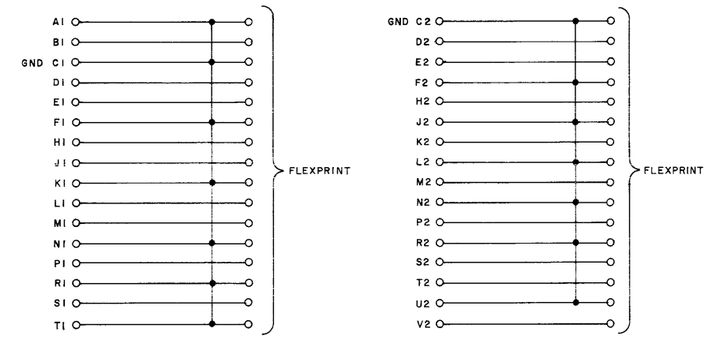

PARTS LIST IS A-PL-M903-0-0

B-CS-M903-0-1 Connector (Flexprinter)

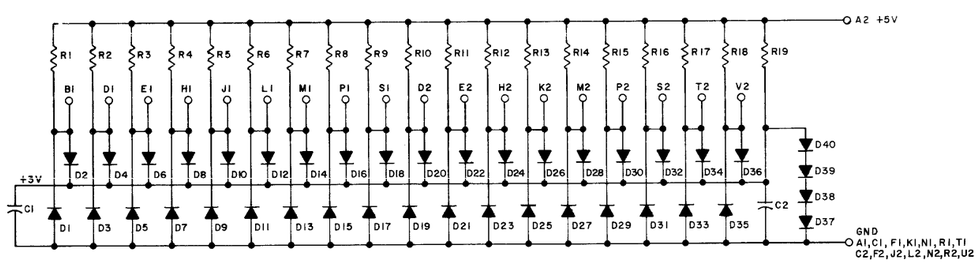

R1-R19	RES. 220 1/4W 5% CC	1300271
D37-D40	DIODE D662	1100113
D1-D36	DIODE D664	1100114
C1,C2	CAP. .01MFD 100V 20% DISC	1001610
	PARTS LIST	A-PL-M906-0-0
REFERENCE DESIGNATION	DESCRIPTION	PART NO.

PARTS LIST

B-CS-M906-0-1 Cable Terminator

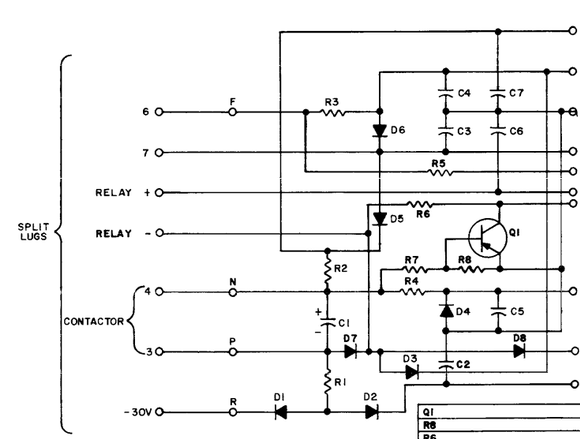

TYPICAL PIN ASSIGNMENTS

PIN	8	8I, 8L	DC08
A	+10V	+5V	+5V
B	-15V	-15V	+5V
C	GND	GND	GND
H	LOGIC INPUT	LOGIC INPUT	—
U	—	—	LOGIC INPUT
M	READER ENABLE	READER ENABLE	READER ENABLE
D	LOGIC OUTPUT	—	—
E	—	LOGIC OUTPUT	LOGIC OUTPUT
K	—	—	-15V
V	-30V OPTIONAL	-30V OPTIONAL	-30V OPTIONAL

Q1	TRANSISTOR DEC6534D	1503409
R8	RES. 1.5K 1/4W 5% CC	1300391
R6	RES. 1.8K 1/2W 10% CC	1300400
R7	RES. 10K 1/4W 10% CC	1300481
R3,R4	RES. 750 1/2W 5% CC	1300354
R2	RES. 750 2W 5% CC	1301984
R1	RES. 1K 1W 10% CC	1301499
R5	RES. 120 1/2W 5% CC	1300243
D1-D8	DIODE D671	1103309
C2-C7	CAP. .01MFD 100V 20% DISC	1001610
C1	CAP. 1MFD 150V 10% FOIL	1000063
	PARTS LIST	A-PL-W076-0-0
REFERENCE DESIGNATION	DESCRIPTION	PART NO.

PARTS LIST

B-CS-W076-0-1 Teletype Connector

Digital Equipment Corporation
Maynard, Massachusetts

digital

printed in U.S.A.