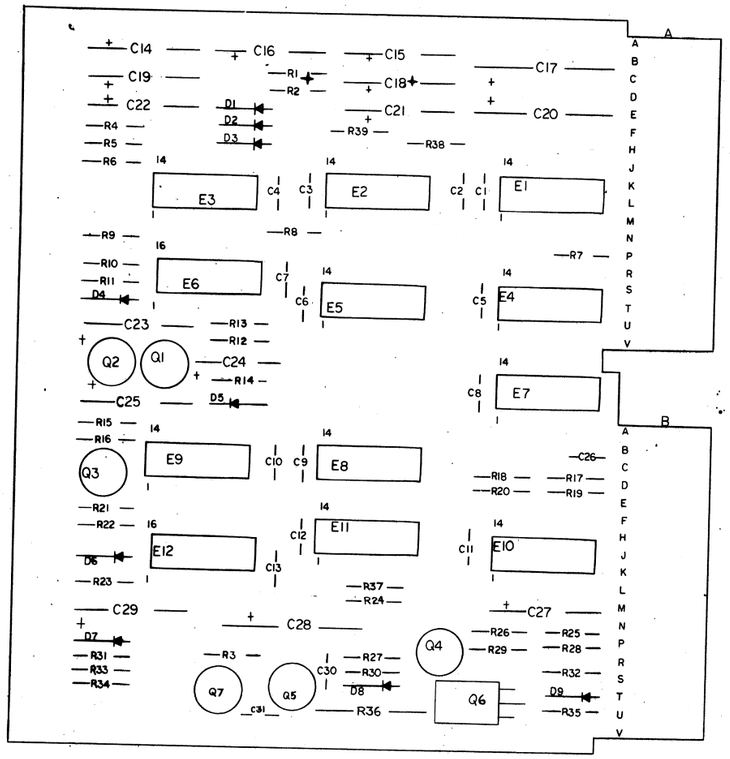


| QTY. | REF DESIGNATION | DESCRIPTION | DEC PART NO. | ITEM NO. |
|---|---|---|---|---|
| 1 | | NUT, NYLON 4-40 | 9007992 | 41 |
| 1 | | SCREW, NYLON 4-40 x 1/8 | 9004481-4 | 40 |
| 2 | | HANDLE, FLIP CHIP - MAGENTA | 9006537-86 | 39 |
| 4 | | EYELET, | 9006732 | 38 |
| 2 | E6, 12 | I.C. DEC 74123 | 1910436 | 37 |
| 3 | E3, 5, 9 | I.C. DEC 9601 | 1909373 | 36 |
| 2 | E2, 7 | I.C. DEC 7402 | 1909004 | 35 |
| 1 | E11 | I.C. DEC 7450 | 1905580 | 34 |
| 2 | E4, 10 | I.C. DEC 7400 | 1905575 | 33 |
| 2 | E1, 8 | I.C. DEC 7474 | 1905547 | 32 |
| 1 | Q6 | TRANSISTOR DEC 4920 | 1909605 | 31 |
| 1 | Q4 | TRANSISTOR DEC 6531 | 1509338 | 30 |
| 5 | Q1, 2, 3, 5, 7 | TRANSISTOR DEC 3009B | 1503100 | 29 |
| 1 | R31 | RES. 39K ¼W 5% | 1302514 | 28 |
| 1 | R11 | RES. 30K ¼W 5% | 1302394 | 27 |
| 1 | R36 | RES. 390 1W 5% | 1302384 | 26 |
| 1 | R5 | RES. 22K ¼W 5% | 1301808 | 25 |
| 1 | R30 | RES. 820 ¼W 5% | 1301775 | 24 |
| 5 | R8, 19, 20, 38, 39 | RES. 680 ¼W 5% | 1301424 | 23 |
| 1 | R2 | RES. 180 ¼W 5% | 1301322 | 22 |
| 8 | R21,28,29,32,33,34,35,37 | RES. 1.2K ¼W 5% | 1301320 | 21 |
| 3 | R6, 7, 22 | RES. 12K ¼W 5% | 1300488 | 20 |
| 4 | R10, 13, 14, 23 | RES. 10K ¼W 5% | 1300479 | 19 |
| 3 | R3, 18, 26 | RES. 3.9K ¼W 5% | 1300444 | 18 |
| 1 | R12 | RES. 3K ¼W 5% | 1300432 | 17 |
| 1 | R9 | RES. 2.2K ¼W 5% | 1300417 | 16 |
| 4 | R15, 16, 24, 27 | RES. 1.8K ¼W 5% | 1300398 | 15 |
| 1 | R4 | RES. 27K ¼W 5% | 1305344 | 14 |
| 3 | R1, 17, 25 | RES. 220 ¼W 5% | 1300271 | 13 |
| 1 | D9 | DIODE 1N4001 | 1102942 | 12 |
| 8 | D1 thru D8 | DIODE D664 | 1100114 | 11 |
| 1 | C28 | CAP. 100UF 20V 10% TANT | 1004815 | 10 |
| 2 | C17, 20 | CAP. 47UF 20V 10% TANT | 1004814 | 9 |
| 1 | C26 | CAP. .05UF 25V -20% +80% DISC | 1001774 | 8 |
| 15 | C1 thru C13, 30, 31 | CAP. .01UF 100V 20% DISC | 1001610 | 7 |
| 11 | C14, 15, 16, 18, 19, 21-23, 27, 29, 25 | CAP. 39UF 10V 10% TANT | 1000076 | 6 |
| 1 | C24 | CAP. 3.9UF 10V 10% TANT | 1000064 | 5 |
| 1 | | ETCHED CIRCUIT BOARD | 500 9129 | 4 |
| | | MODULE ECO HISTORY | B-MH-M890-0-6 | 3 |
| | | ASSY/DRILLING HOLE LAYOUT | D-AH-M890-0-5 | 2 |
| | | X-Y COORDINATE HOLE LOCATION | K-CO-M890-0-4 | 1 |

PARTS LIST

SHEET 1 OF 2

| REVISIONS | | |
|---|---|---|
| CHK CHG NO. | REV. | |
| 00003 | H | |
| 00004 | J | |

DRN. Roger Doucette DATE 5/13/71
CHK'D Lindway DATE 5/27/71
ENG. [illegible] DATE 7/26/71
PROD. DATE

TRANSISTOR & DIODE CONVERSION CHART

| DEC | EIA | DEC | EIA |
|---|---|---|---|
| | | | |

digital EQUIPMENT CORPORATION MAYNARD, MASSACHUSETTS

TITLE MOTION CONTROL

| SIZE | CODE | NUMBER | REV. |
|---|---|---|---|
| D | CS | M890-0-1 | J |

PRINTED CIRCUIT REV. H

DEC FORM NO. DRD 118

(4) DIST: 324, 434, 435 2

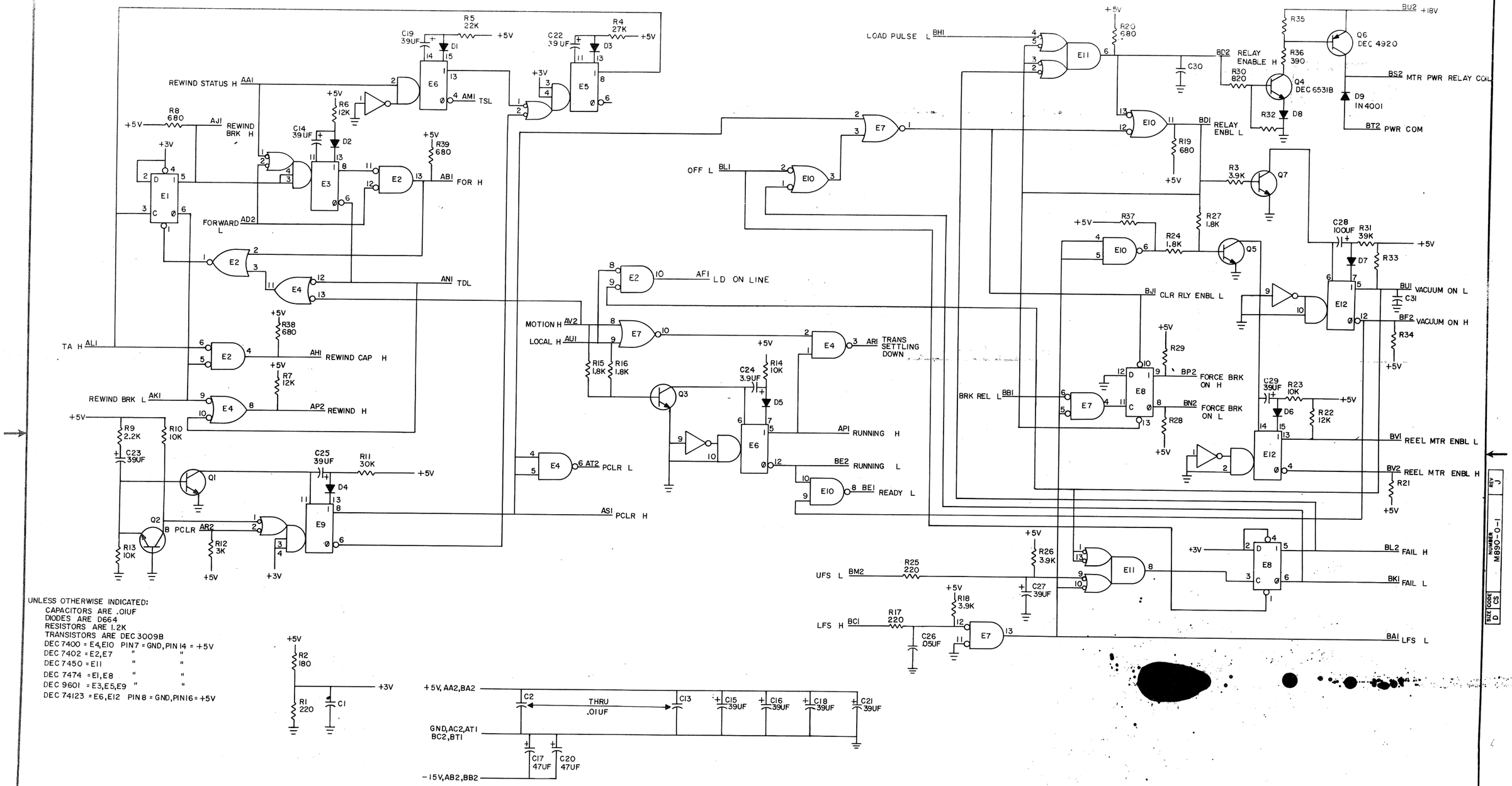


UNLESS OTHERWISE INDICATED:
CAPACITORS ARE .01UF
DIODES ARE D664
RESISTORS ARE 1.2K
TRANSISTORS ARE DEC 3009B
DEC 7400 = E4, E10 PIN 7 = GND, PIN 14 = +5V
DEC 7402 = E2, E7 " "
DEC 7450 = E11 " "
DEC 7474 = E1, E8 " "
DEC 9601 = E3, E5, E9 " "
DEC 74123 = E6, E12 PIN 8 = GND, PIN 16 = +5V

| REVISIONS | | |
|---|---|---|
| CHK | CHG NO | REV |
| | 00003 | H |
| FLUR | 00004 | J |

DRN Roger Doucette DATE 5/13/71
CHK'D DATE 7/25/71
ENG DATE 7/23/71
PROD DATE

TRANSISTOR & DIODE CONVERSION CHART

| DEC | EIA | DEC | EIA |
|---|---|---|---|
| DEC 4920 | | IN4001 | SAME |
| DEC3009B | 2N3009 | 664 | IN3606 |
| DEC 6531 | MPS6531 | | |

digital EQUIPMENT CORPORATION MAYNARD, MASSACHUSETTS

SHEET 2 OF 2

TITLE MOTION CONTROL

| SIZE | CODE | NUMBER | REV. |
|---|---|---|---|
| D | CS | M890-0-1 | J |

PRINTED CIRCUIT REV. H

DEC FORM NO. DRD 118

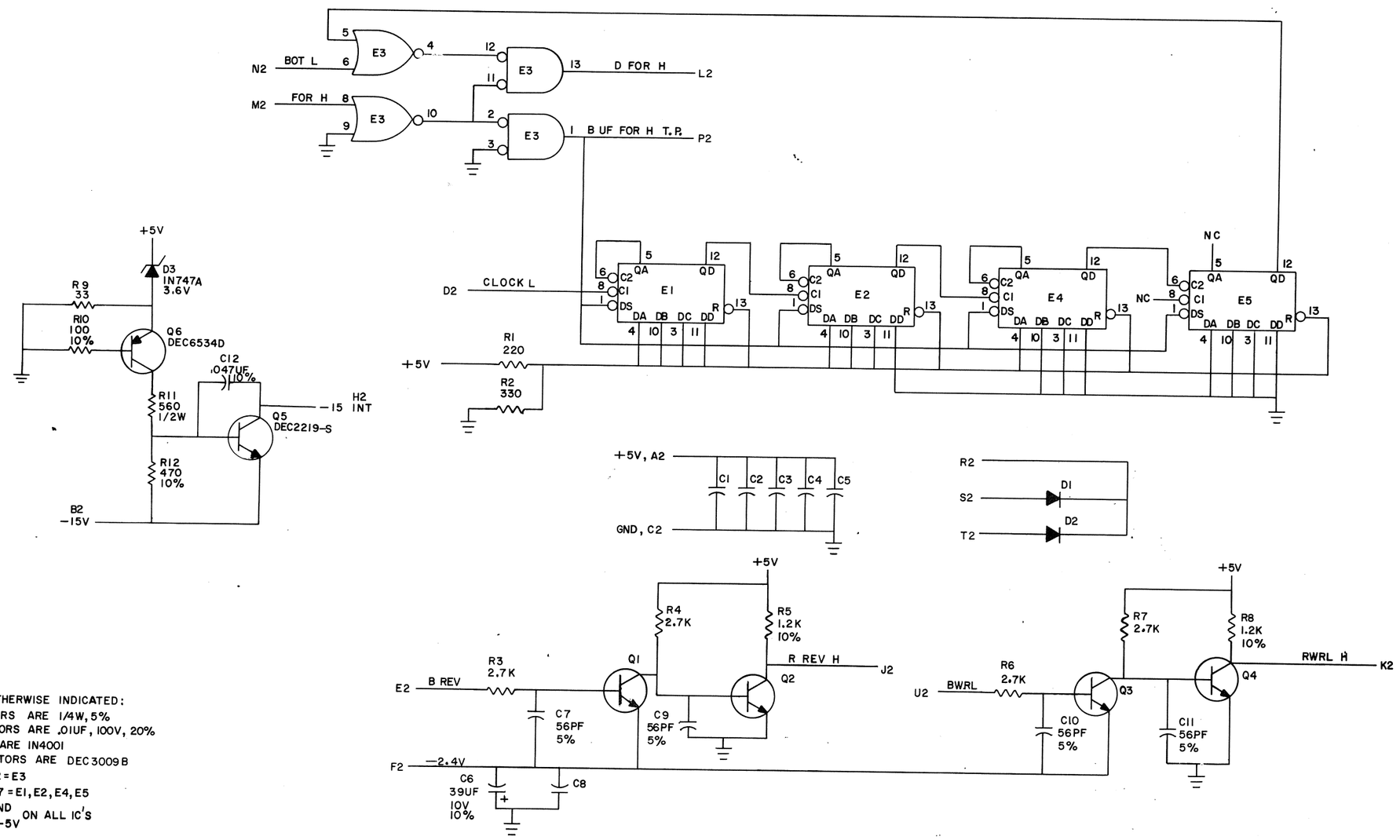


UNLESS OTHERWISE INDICATED:
RESISTORS ARE 1/4W, 5%
CAPACITORS ARE .01UF, 100V, 20%
DIODES ARE IN4001
TRANSISTORS ARE DEC3009B
DEC7402 = E3
DEC74197 = E1, E2, E4, E5
PIN 7=GND
PIN 14 = +5V
ON ALL IC'S

| REVISIONS | | | |
|---|---|---|---|
| CHK | CHG NO. | REV. | |
| | 00001 | B | |
| | 00002 | C | |

| | | |
|---|---|---|
| DRN. George Dyatt | DATE 1-12-71 | |
| CHK'D | DATE 1-12-71 | |
| ENG. M. Morgan Tom/R&D | DATE 1-13-71 | |
| PROD. | DATE | |

TRANSISTOR & DIODE CONVERSION CHART

| DEC | EIA | DEC | EIA |
|---|---|---|---|
| IN4001 | SAME | IN747A 3.6V | SAME |
| DEC2219 | 2N2219 | | |
| DEC6534D | MPS6534 | | |

digital EQUIPMENT CORPORATION
MAYNARD, MASSACHUSETTS

TITLE
FORWARD B.O.T. TIMER M7670

| SIZE | CODE | NUMBER | REV. |
|---|---|---|---|
| C | CS | M7670-0-1 | C |

PRINTED CIRCUIT REV. C

DEC FORM NO.
DRC 102

DIST, 324, 434, 435²

4 PINK

REV. C
NUMBER M7670-0-1
SIZE C CODE CS

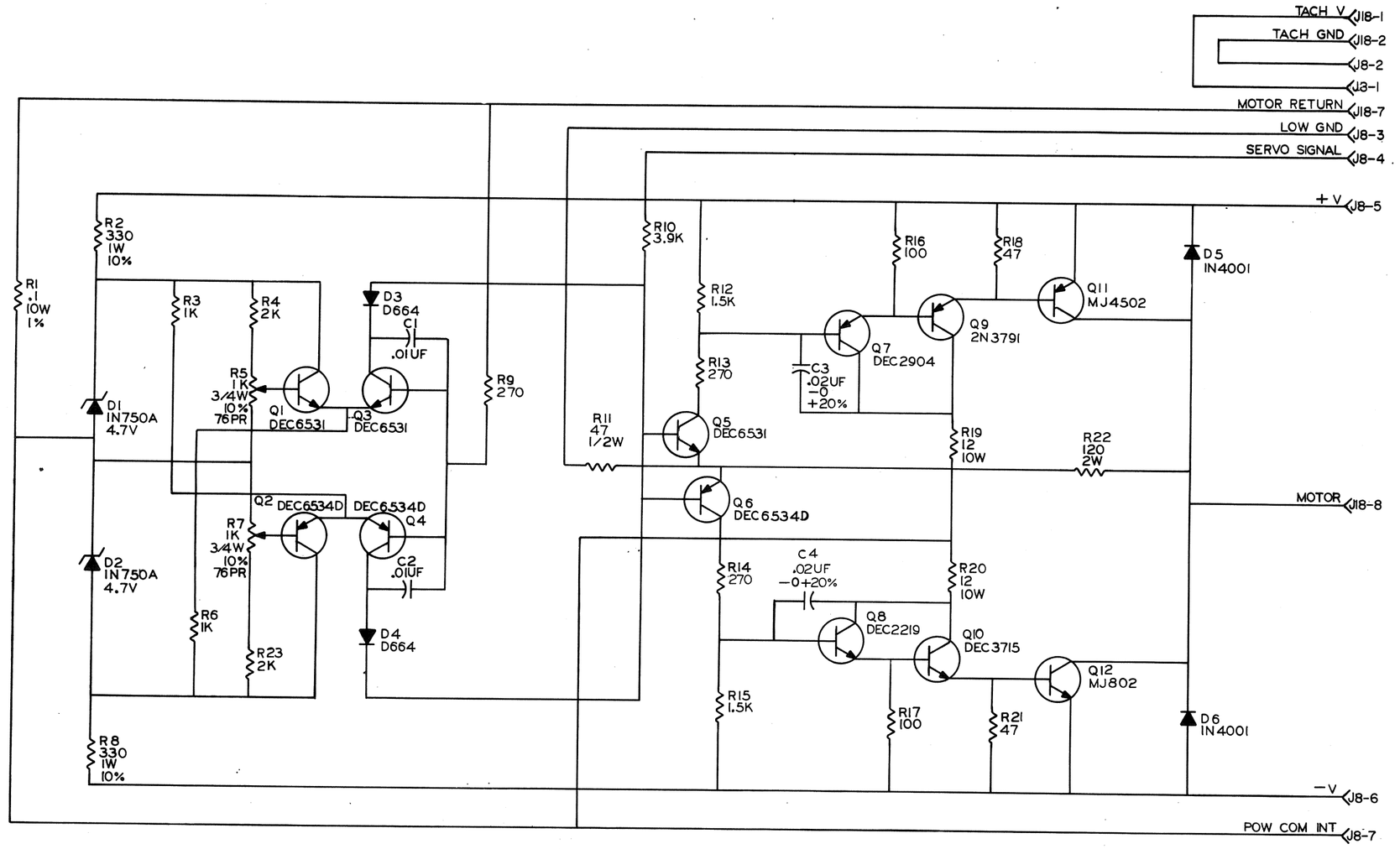


UNLESS OTHERWISE INDICATED:
CAPACITORS ARE 100V, 20%
RESISTORS ARE 1/4W, 5%
J13 AND J14 = MATE AND LOCK CONNECTORS 1209340

| REVISIONS | | | |
|---|---|---|---|
| CHK | CHG NO. | REV. | |
| REV | & REDR | H | |
| | 00002 | | |
| | 00003 | J | |

| | | |
|---|---|---|
| DRN. | Roger Doucette | DATE 4/26/71 |
| CHK'D | Nancy Moore | DATE 9.29.71 |
| ENG. | M. Morgenstern | DATE 9/6/71 |
| PROD. | | DATE |

TRANSISTOR & DIODE CONVERSION CHART

| DEC | EIA | DEC | EIA |
|---|---|---|---|
| MJ4502 | | DEC3715 | 2N3715 |
| MJ802 | | DEC2219 | 2N2219 |
| 2N3791 | | DEC2904 | 2N1132 |
| DEC6531 | MPS6531 | 1N4001 | SAME |
| DEC6534D | MPS6534 | 1N750A | SAME |
| | | D664 | 1N3606 |

digital EQUIPMENT CORPORATION MAYNARD, MASSACHUSETTS

TITLE CAPSTAN POWER AMP

| SIZE | CODE | NUMBER | REV. |
|---|---|---|---|
| C | CS | H603-0-1 | J |

PRINTED CIRCUIT REV. H

DEC FORM NO. DRC 102

Pink

DIST. 324, 434, 435

(4)

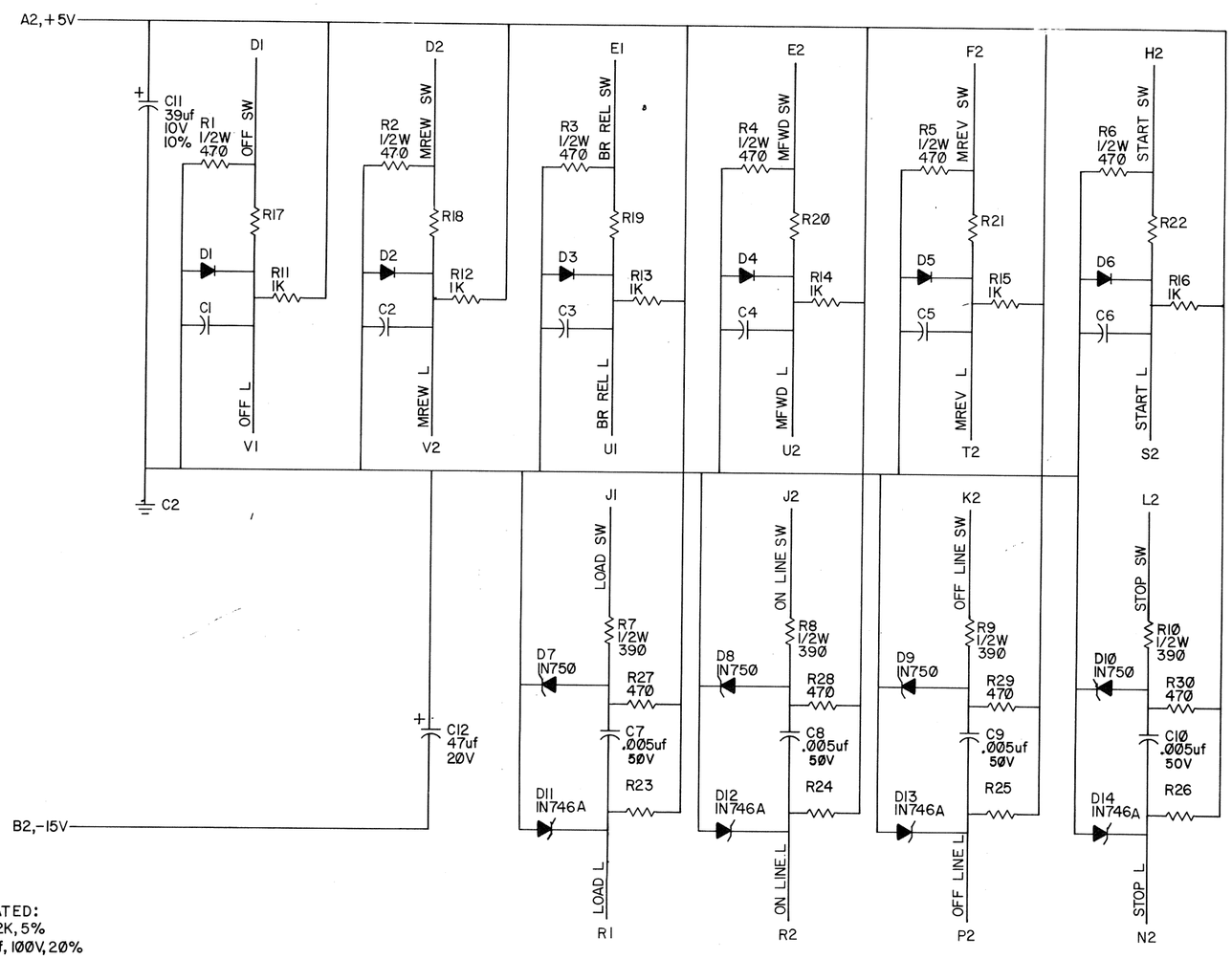


UNLESS OTHERWISE INDICATED:
RESISTORS ARE 1/4W, 1.2K, 5%
CAPACITORS ARE .01uf, 100V, 20%
DIODES ARE D003
DIODES WHICH ARE IN750 ARE 4.7V
DIODES WHICH ARE IN746 ARE 3.3V

| REVISIONS | | | |
|---|---|---|---|
| CHK | CHG NO. | REV. | |
| | W726-1 | B | |
| | | | H. DRAB |
| | | | 5-14-70 |

| | | | |
|---|---|---|---|
| DRN. | jeanne french | DATE | 7/28/70 |
| CHK'D | | DATE | 9/9/70 |
| ENG. | | DATE | 9-15-70 |
| PROD. | | DATE | |

TRANSISTOR & DIODE CONVERSION CHART

| DEC | EIA | DEC | EIA |
|---|---|---|---|
| D003 | IN994 | | |
| IN746A | SAME | | |
| IN750 | SAME | | |

digital EQUIPMENT CORPORATION MAYNARD, MASSACHUSETTS

TITLE SWITCH FILTER W726

| SIZE | CODE | NUMBER | REV. |
|---|---|---|---|
| C | CS | W726-0-1 | B |

PRINTED CIRCUIT REV. B

DEC FORM NO. DRC 102

DIST. 324, 434, 435 3

PINK

| SIZE | CODE | NUMBER | REV. |
|---|---|---|---|
| C | CS | W726-0-1 | B |

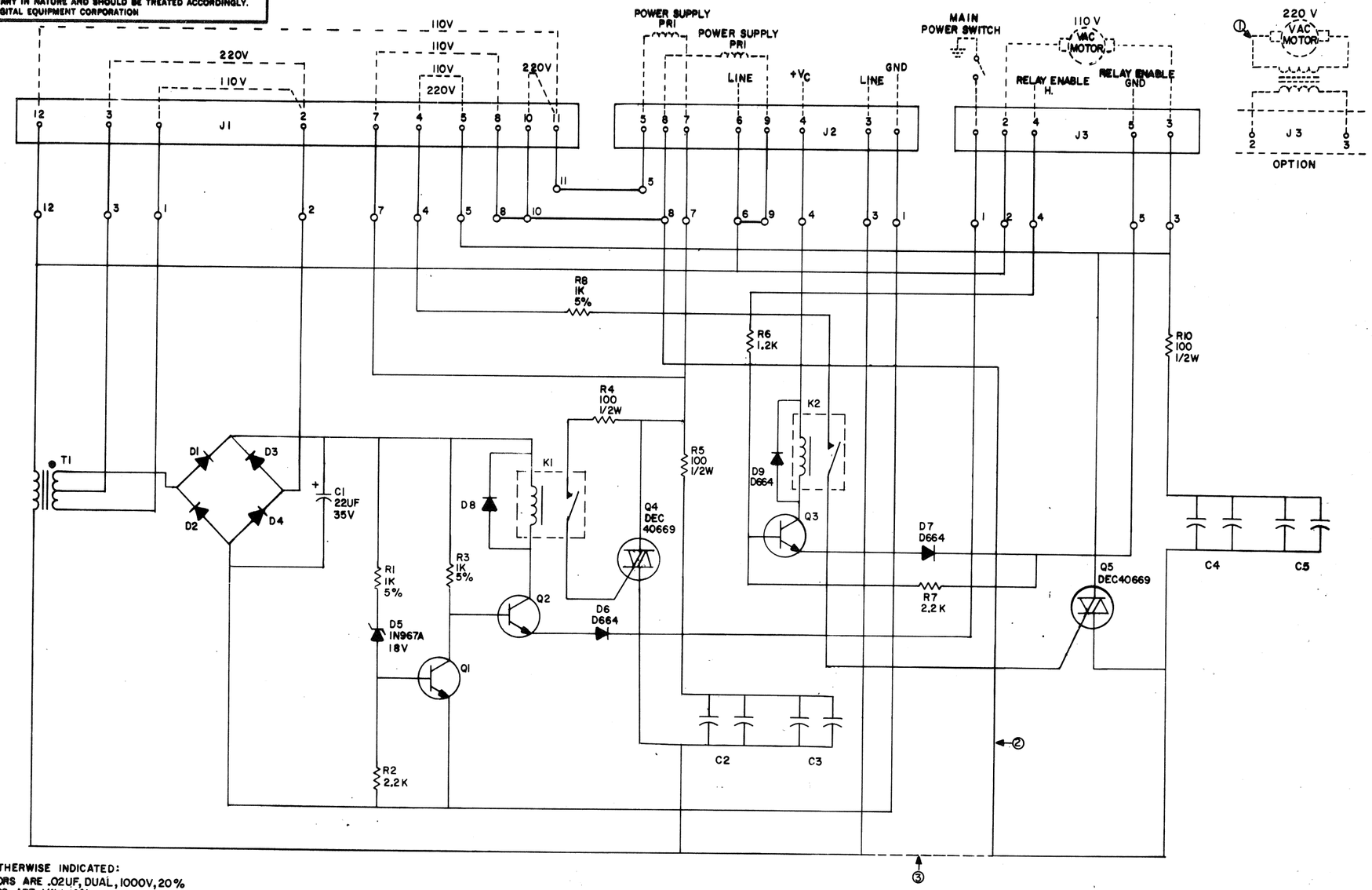


UNLESS OTHERWISE INDICATED:
CAPACITORS ARE .02UF, DUAL, 1000V, 20%
RESISTORS ARE 1/4W, 10%
DIODES ARE D670
TRANSISTORS ARE MPS6531
K1, K2 ARE A COTO-COIL 40034 RELAY
T1 IS A TRA 1236 220V PRI-24V C.T. SEC
J1 IS A 15 PIN MATENLOCK SOCKET HOUSING 1209350-15
J2 IS A 12 PIN MATENLOCK SOCKET HOUSING 1209350-12
J3 IS A 6 PIN MATENLOCK SOCKET HOUSING 1209350-6
---- INDICATES EXTERNAL CONNECTIONS

NOTES:
① OPTION GOOD FOR 230V AND H730 TRANS, T9147-B ONLY.
② DELETE WIRE WHEN USING H730 WITH T9147-B TRANS.
③ ADD WIRE WHEN USED WITH T9147-B TRANS.

| REV. | | | |
|---|---|---|---|
| A | | | |
| B | | | |
| C | 00002 | | |
| D | 00004 | | |
| E | 100005 | | |
| F | 100006 | | |
| G | 100007 | | |
| H | 100007 | | |
| J | 100008 | | |

DRN. Nancy Moore DATE 10/16/70
CHK'D DATE
ENG. DATE 12/21/70
PROD. DATE

TRANSISTOR & DIODE CONVERSION CHART

| DEC | EIA | DEC | EIA |
|---|---|---|---|
| D664 | [illegible] | MPS6531 | [illegible] |
| D670 | [illegible] | | |
| IN967 | [illegible] | | |

[redacted]
EQUIPMENT CORPORATION
MAYNARD, MASSACHUSETTS

TITLE TU 10 POWER CONTROL 5408924

| SIZE | CODE | NUMBER | REV. |
|---|---|---|---|
| C | CS | 5408924-0-1 | J |

PRINTED CIRCUIT REV. D

DEC FORM NO. DRC 102

DISP. 3240939.033 ± PINK

5408924-0-1 C CS

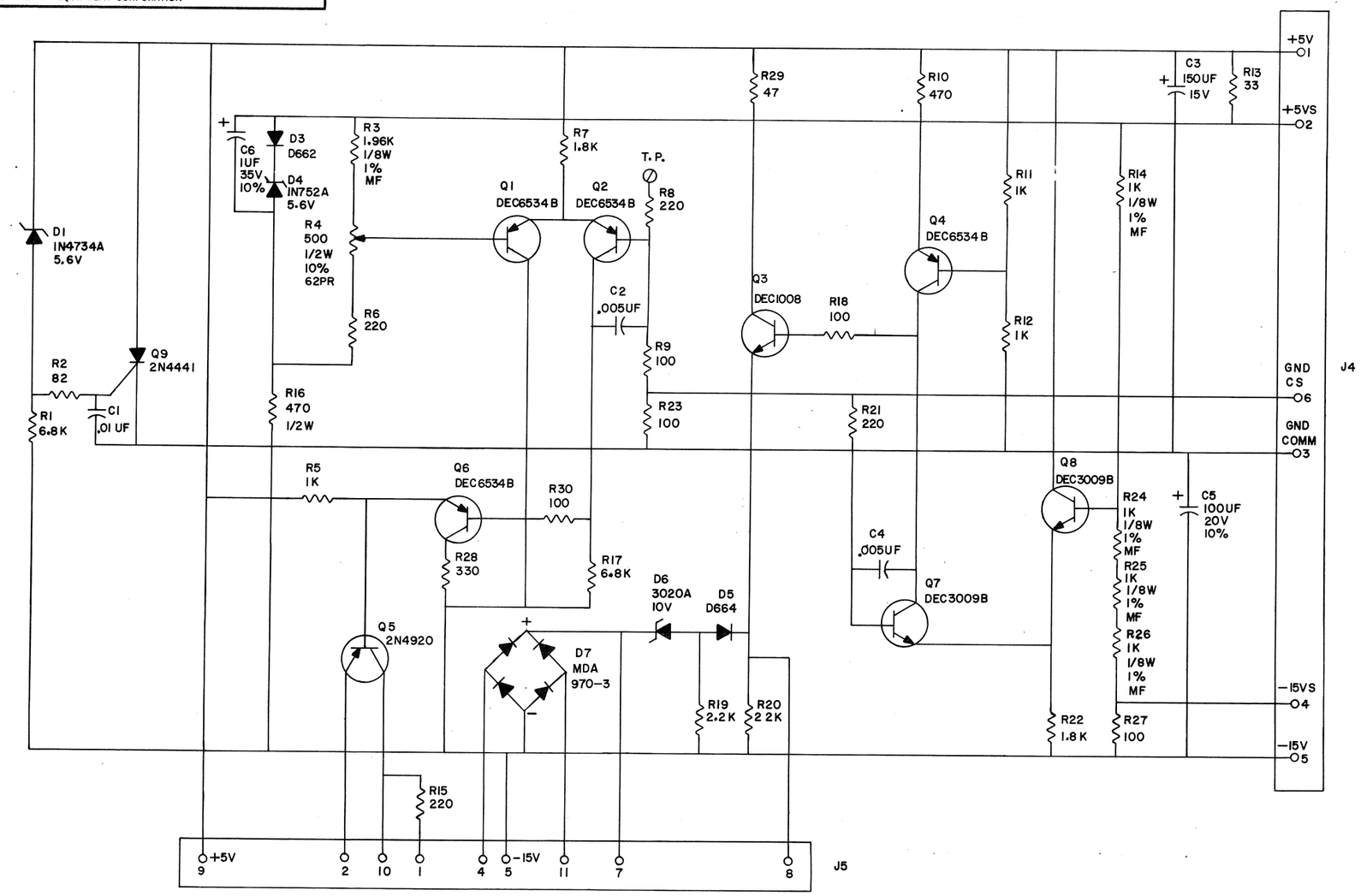


UNLESS OTHERWISE INDICATED:
RESISTORS ARE 1/4W, 5%
CAPACITORS ARE 100V, 20%
J1 = 6PIN MATE-N-LOCK CONNECTOR, 1209350-06
J2 = 12PIN MATE-N-LOCK CONNECTOR, 1209350-06
⊘ = SPLIT LUG

| REVISIONS | | |
|---|---|---|
| CHK | CHG NO. | REV. |
| | 00001 | D |
| | 00002 | E |
| | 00003 | F |

| | | | |
|---|---|---|---|
| DRN. N.C. MOORE | DATE 1-18-71 | | |
| CHKD | DATE 2/19/71 | | |
| ENG. M. Norquinstar / RFD | DATE 2/17/71 | | |
| PROD. | DATE | | |

TRANSISTOR & DIODE CONVERSION CHART

| DEC | EIA | DEC | EIA |
|---|---|---|---|
| DEC 1008 | NONE | DEC3009B | 2N3009 |
| DEC6534B | MPS6534 | IN4734A | SAME |
| D662 | IN645 | IN752A | SAME |
| D664 | IN3606 | 2N4920 | |
| 3020A | | | |

digital EQUIPMENT CORPORATION
MAYNARD, MASSACHUSETTS

TITLE VOLTAGE REGULATOR 5408928

| SIZE | CODE | NUMBER | REV. |
|---|---|---|---|
| C | CS | 5408928-0-1 | F |

PRINTED CIRCUIT REV. D

DEC FORM NO. DRC 102

REV. F
NUMBER 5408928
SIZE C CODE CS

PRINT

| SIZE | CODE | NUMBER | REV. |
|---|---|---|---|
| B | CS | G741-0-1 | B |



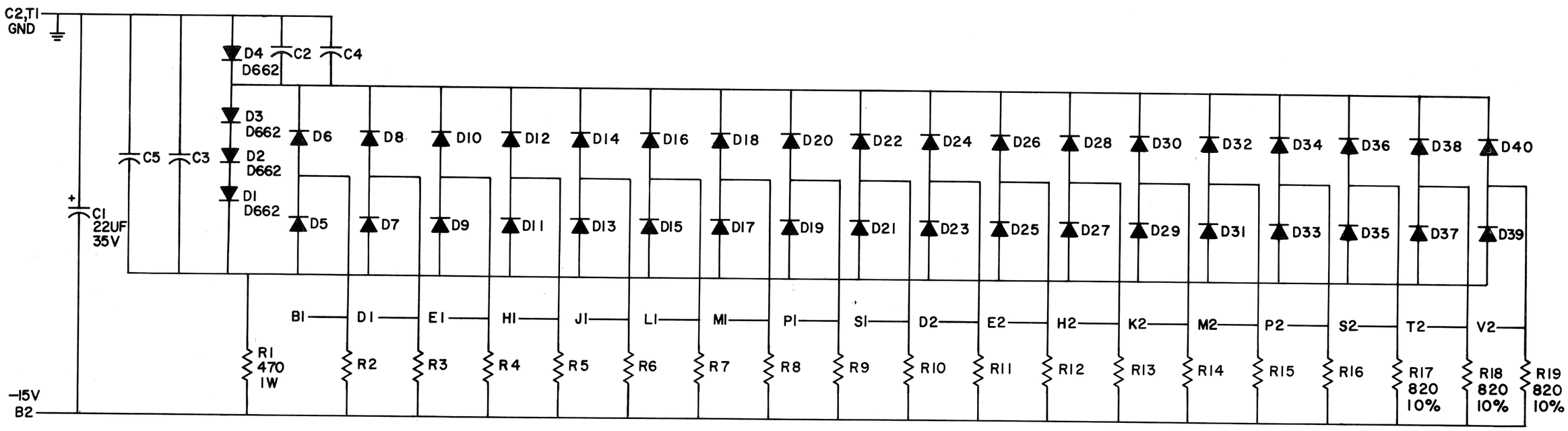


UNLESS OTHERWISE INDICATED:
RESISTORS ARE 3K, 1/2W, 5%
CAPACITORS ARE .01UF, 100V, 20%
DIODES ARE D664

| | | |
|---|---|---|
| G741-YA | 820 ½W 10% | 3K ½W 10% |
| VARIATION | R11 | R17, R18 |

| REVISIONS | | |
|---|---|---|
| CHK | CHG NO. | REV. |
| | 00001 | B |

| | | | |
|---|---|---|---|
| DRN. | S. Cooper | DATE | 11/4/70 |
| CHK'D | R. Walkie | DATE | 11/25/70 |
| ENG. | M. Morgenstern | DATE | 12/8/70 |
| PROD. | | DATE | |

TRANSISTOR & DIODE CONVERSION CHART

| DEC | EIA | DEC | EIA |
|---|---|---|---|
| D664 | IN3606 | | |
| D662 | IN645 | | |

digital EQUIPMENT CORPORATION
MAYNARD, MASSACHUSETTS

TITLE TU10 NEGATIVE BUS TERMINATOR G741

| SIZE | CODE | NUMBER | REV. |
|---|---|---|---|
| B | CS | G741-0-1 | B |

PRINTED CIRCUIT REV. C

DEC FORM NO.
DRB 102

DIST. 324, 434, 435 2

4 Pin

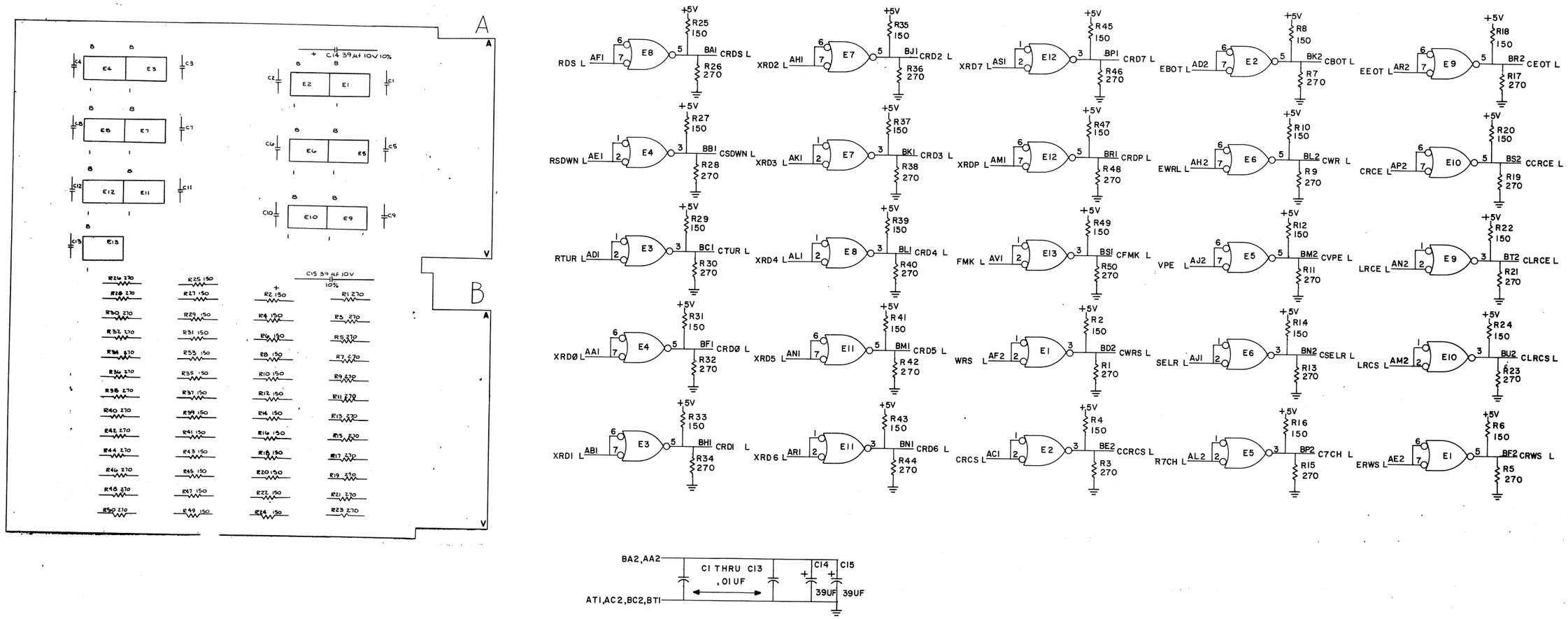


PIN 8= +5V
PIN 4= GND ON ALL IC'S

| QTY. | REF DESIGNATION | DESCRIPTION | DEC PART NO. | ITEM NO. |
|---|---|---|---|---|
| | | GRIPLET | 1210244-0 | 12 |
| 13 | E1 - E13 | I.C. DEC 75451 | 1910406 | 11 |
| 4 | | EYELET #GS4-7 | 9006732 | 10 |
| 2 | | HANDLE, FLIP CHIP - MAGENTA | 9008337-06 | 9 |
| 25 | R1,3,5,7,9,11,13,15,17,19,21,23, 26,28,30,32,34,36,38,40,42,44,46,48,50 | RES. 270 ¼W 5% | 1301972 | 8 |
| 25 | R2,4,6,8,10,12,14,16,18,20,22,24,27, 29,31,33,35,37,39,41,43,45, 47,49 | RES. 150 ¼W 5% | 1300250 | 7 |
| 13 | C1 - C13 | CAP. .01UF 100V 20% DISC | 1001610 | 6 |
| 2 | C14, 15 | CAP. 39UF 10V 10% | 1000076 | 5 |
| 1 | | ETCHEL CIRCUIT BOARD | 5009575 | 4 |
| | | MODULE ECO HISTORY | B-MH-M640-0-6 | 3 |
| | | ASSY/DRILLING HOLE LAYOUT | D-AH-M640-0-5 | 2 |
| | | X-Y COORDINATE HOLE LOCATION | K-CO-M640-0-4 | 1 |

PARTS LIST

| TRANSISTOR & DIODE CONVERSION CHART | | | |
|---|---|---|---|
| DEC | EIA | DEC | EIA |

REVISIONS: CHK | CHG NO. | REV.

DRN B. J. Hale 4-23-71
CHK'D Nancy Moores 4-26-71
ENG. H. Morland 4-26-71
PROD. 4-26-71

digital EQUIPMENT CORPORATION MAYNARD, MASSACHUSETTS

TITLE MASTER/INTERFACE BUS DRIVER

| SIZE | CODE | NUMBER | REV. |
|---|---|---|---|
| D | CS | M640-0-1 | B |

PRINTED CIRCUIT REV. C

DEC FORM NO. DRD 116

| SIZE | CODE | NUMBER | REV |
|---|---|---|---|
| D | CS | M7671-0-1 | A |

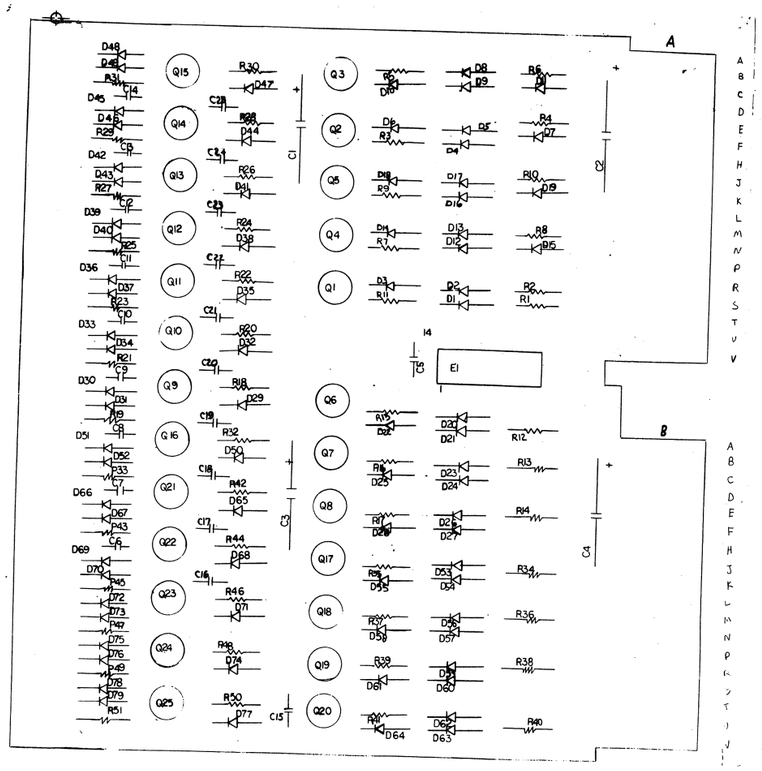


| QTY | REF DESIGNATION | DESCRIPTION | DEC PART NO. | ITEM NO. |
|---|---|---|---|---|
| 2 | | HANDLE, FLIP CHIP + MAGENTA | 9008337-06 | 17 |
| 4 | | EYELET #GS4-7 | 9006732 | 16 |
| | | GRIPLET | 1210244-0 | 15 |
| 1 | E1 | I.C. DEC 7404 | 1909686 | 14 |
| 25 | Q1 - Q25 | TRANSISTOR DEC 3639B | 1902762 | 13 |
| 25 | R3,5,7,9,11,15,17,21,23,25,27,29,31,33,35,37,39,41,43,45,47,49,51 | RES. 6.8K ¼W 5% | 1301423 | 12 |
| 1 | R1 | RES. 180 ¼W 5% | 1301322 | 11 |
| 25 | R2,4,6,8,10,12,14,18,20,22,24,26,28,30,32,34,36,38,40,42,44,46,48,50 | RES. 1.2K ¼W 5% | 1301320 | 10 |
| 79 | D1 - D79 | DIODE D664 | 1100114 | 9 |
| 21 | C5 - C25 | CAP. .01UF 100V 20% DISC | 1001610 | 8 |
| 4 | C1 - C4 | CAP. 39UF 20V 10% S. TANT | 1005335. | 7 |
| 1 | | ETCHED CIRCUIT BOARD | 5009568 | 6 |
| | | MODULE ECO HISTORY | B-MH-M7671-0-6 | 5 |
| | | ASSY/DRILLING HOLE LAYOUT | D-AH-M7671-0-5 | 4 |
| | | X-Y COORDINATE HOLE LOCATION | X-CO-M7671-0-4 | 3 |

PARTS LIST

PAGE 1 OF 2

REVISIONS

| CHG | CHG NO. | REV |
|---|---|---|
| | | |

| | | DATE |
|---|---|---|
| DRN. | S. COOPER | 4/26/71 |
| CHK'D | | |
| ENG. | | 6-29-71 |
| PROD. | | |

TRANSISTOR & DIODE CONVERSION CHART

| DEC | EIA | DEC | EIA |
|---|---|---|---|
| | | | |

digital EQUIPMENT CORPORATION MAYNARD, MASSACHUSETTS

TITLE MASTER/SLAVE BUS DRIVER

| SIZE | CODE | NUMBER | REV. |
|---|---|---|---|
| D | CS | M7671-0-1 | A |

PRINTED CIRCUIT REV. B

DIST. 324,431,432 2

DEC FORM NO. DRD 116

| SIZE | CODE | NUMBER | REV |
|---|---|---|---|
| D | CS | M767-0-1 | A |

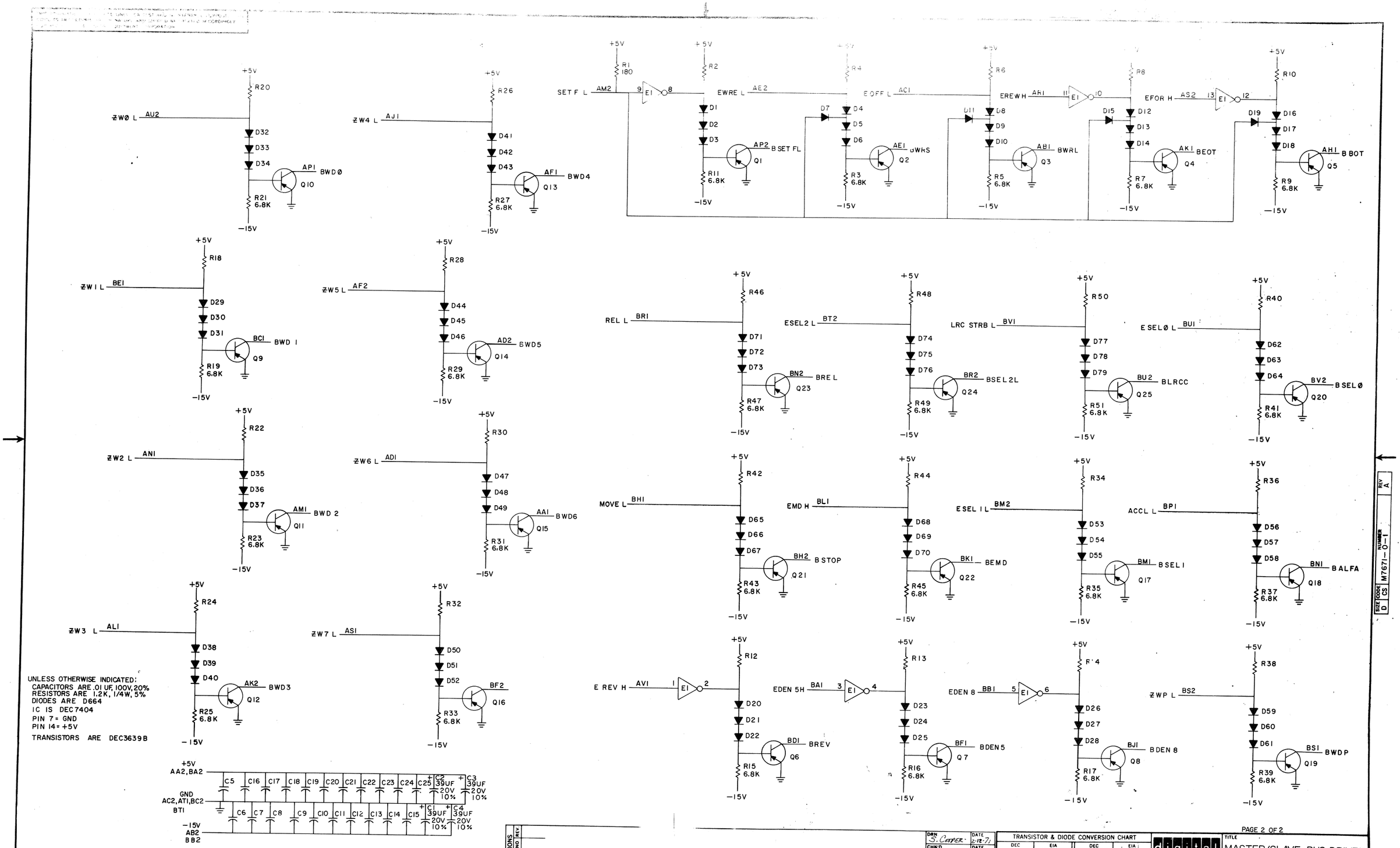
ZWØ L AU2 R20 D32 D33 D34 AP1 BWDØ Q10 R21 6.8K
ZW4 L AJ1 R26 D41 D42 D43 AF1 BWD4 Q13 R27 6.8K
SET F L AM2 E1 EWRE L AE2 D1 D2 D3 AP2 B SET FL Q1 R11 6.8K
EOFF L AC1 D7 D4 D5 D6 AE1 BWRS Q2 R3 6.8K
EREW H AR1 E1 D11 D8 D9 D10 AB1 BWRL Q3 R5 6.8K
EFOR H AS2 E1 D15 D12 D13 D14 AK1 BEOT Q4 R7 6.8K
D19 D16 D17 D18 AH1 B BOT Q5 R9 6.8K
ZW1 L BE1 R18 D29 D30 D31 BC1 BWD 1 Q9 R19 6.8K
ZW5 L AF2 R28 D44 D45 D46 AD2 BWD5 Q14 R29 6.8K
REL L BR1 R46 D71 D72 D73 BN2 BRE L Q23 R47 6.8K
ESEL2 L BT2 R48 D74 D75 D76 BR2 BSEL 2L Q24 R49 6.8K
LRC STRB L BV1 R50 D77 D78 D79 BU2 BLRCC Q25 R51 6.8K
E SELØ L BU1 R40 D62 D63 D64 BV2 B SELØ Q20 R41 6.8K
ZW2 L AN1 R22 D35 D36 D37 AM1 BWD 2 Q11 R23 6.8K
ZW6 L AD1 R30 D47 D48 D49 AA1 BWD6 Q15 R31 6.8K
MOVE L BH1 R42 D65 D66 D67 BH2 B STOP Q21 R43 6.8K
EMD H BL1 R44 D68 D69 D70 BK1 BEMD Q22 R45 6.8K
ESEL 1 L BM2 R34 D53 D54 D55 BM1 B SEL 1 Q17 R35 6.8K
ACCL L BP1 R36 D56 D57 D58 BN1 B ALFA Q18 R37 6.8K
ZW3 L AL1 R24 D38 D39 D40 AK2 BWD3 Q12 R25 6.8K
ZW7 L AS1 R32 D50 D51 D52 BF2 Q16 R33 6.8K
E REV H AV1 E1 R12 D20 D21 D22 BD1 BREV Q6 R15 6.8K
EDEN 5H BA1 E1 R13 D23 D24 D25 BF1 BDEN5 Q7 R16 6.8K
EDEN 8 BB1 E1 R 4 D26 D27 D28 BJ1 BDEN 8 Q8 R17 6.8K
ZWP L BS2 R38 D59 D60 D61 BS1 BWDP Q19 R39 6.8K
+5V
-15V
UNLESS OTHERWISE INDICATED:
CAPACITORS ARE .01 UF, 100V, 20%
RESISTORS ARE 1.2K, 1/4W, 5%
DIODES ARE D664
IC IS DEC7404
PIN 7 = GND
PIN 14 = +5V
TRANSISTORS ARE DEC3639B
+5V AA2, BA2
GND AC2, AT1, BC2 BT1
-15V AB2 BB2
C5 C16 C17 C18 C19 C20 C21 C22 C23 C24 C25 C2 39UF 20V 10% C3 39UF 20V 10%
C6 C7 C8 C9 C10 C11 C12 C13 C14 C15 C1 39UF 20V 10% C4 39UF 20V 10%
REVISIONS
REV
CHG NO
CHK
DRN S. CASPER DATE 2-12-71
CHK'D DATE
ENG DATE
PROD DATE
TRANSISTOR & DIODE CONVERSION CHART
DEC EIA DEC EIA
D664 IN3606 DEC3639 B NONE
digital EQUIPMENT CORPORATION MAYNARD, MASSACHUSETTS
PAGE 2 OF 2
TITLE MASTER/SLAVE BUS DRIVER
SIZE D CODE CS NUMBER M7671-0-1 REV. A
PRINTED CIRCUIT REV. B
DEC FORM NO. DRD 118

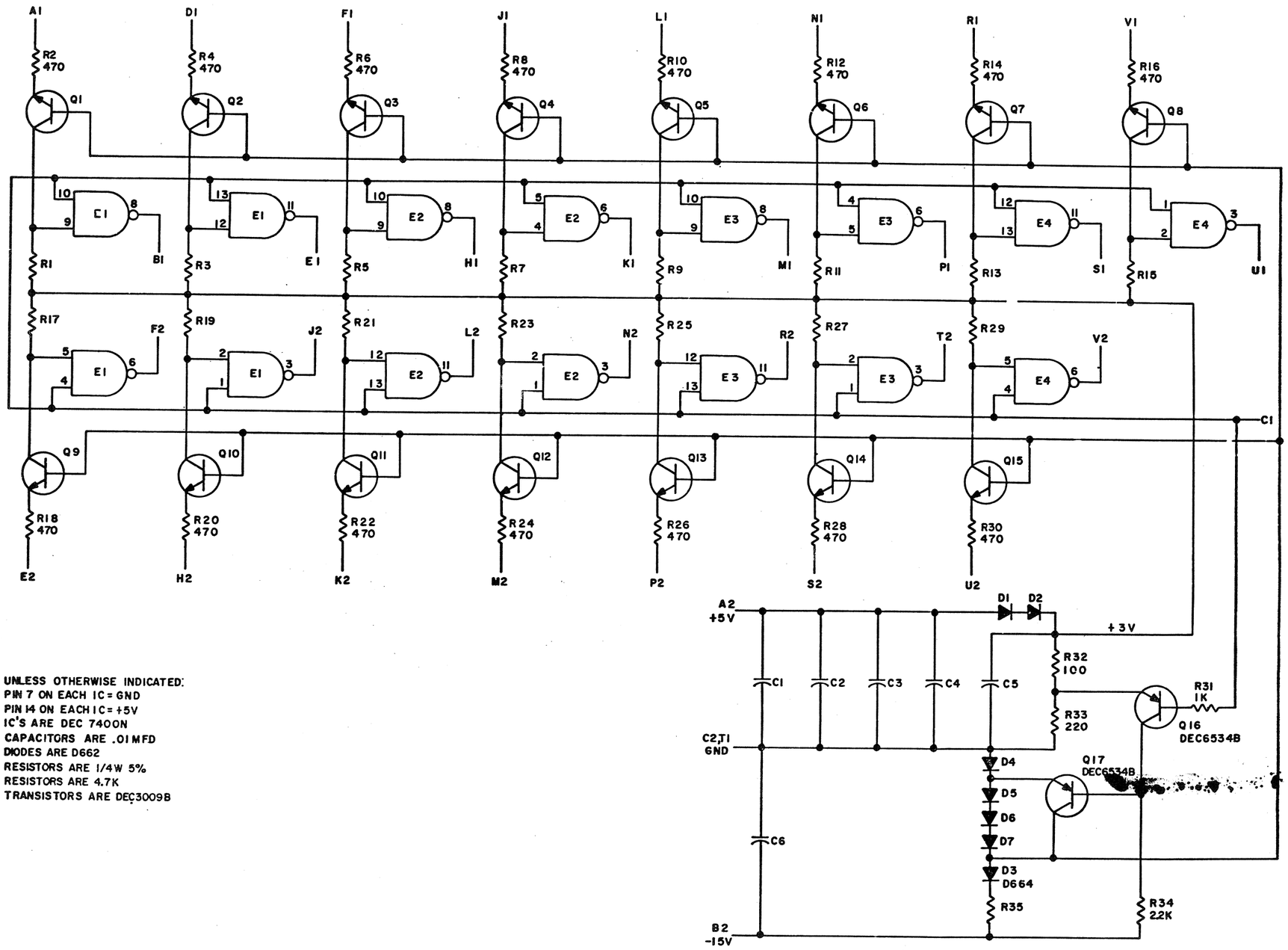


UNLESS OTHERWISE INDICATED:
PIN 7 ON EACH IC = GND
PIN 14 ON EACH IC = +5V
IC'S ARE DEC 7400N
CAPACITORS ARE .01 MFD
DIODES ARE D662
RESISTORS ARE 1/4W 5%
RESISTORS ARE 4.7K
TRANSISTORS ARE DEC3009B

| SIZE | CODE | NUMBER | REV. |
|---|---|---|---|
| C | CS | M100-0-1 | B |

| REVISIONS | | |
|---|---|---|
| CHK | CHG NO. | REV. |
| | 00001 | B |

| | | |
|---|---|---|
| DRN. | | DATE 3-27-69 |
| CHK'D | M. Hamel | DATE 3/27/69 |
| ENG. | R. Vazdsang | DATE 7/11/69 |
| PROD. | | DATE |

TRANSISTOR & DIODE CONVERSION CHART

| DEC | EIA | DEC | EIA |
|---|---|---|---|
| D662 | 1N645 | | |
| D664 | 1N3606 | | |
| DEC3009B | 2N3009 | | |
| DEC6534B | MPS6534 | | |

EQUIPMENT CORPORATION
MAYNARD, MASSACHUSETTS

TITLE BUS DATA INTERFACE M100

| SIZE | CODE | NUMBER | REV. |
|---|---|---|---|
| C | CS | M100-0-1 | B |

PRINTED CIRCUIT REV. A

DEC FORM NO. DRC 102

DIST 324, 434, 435³ 5 PINK

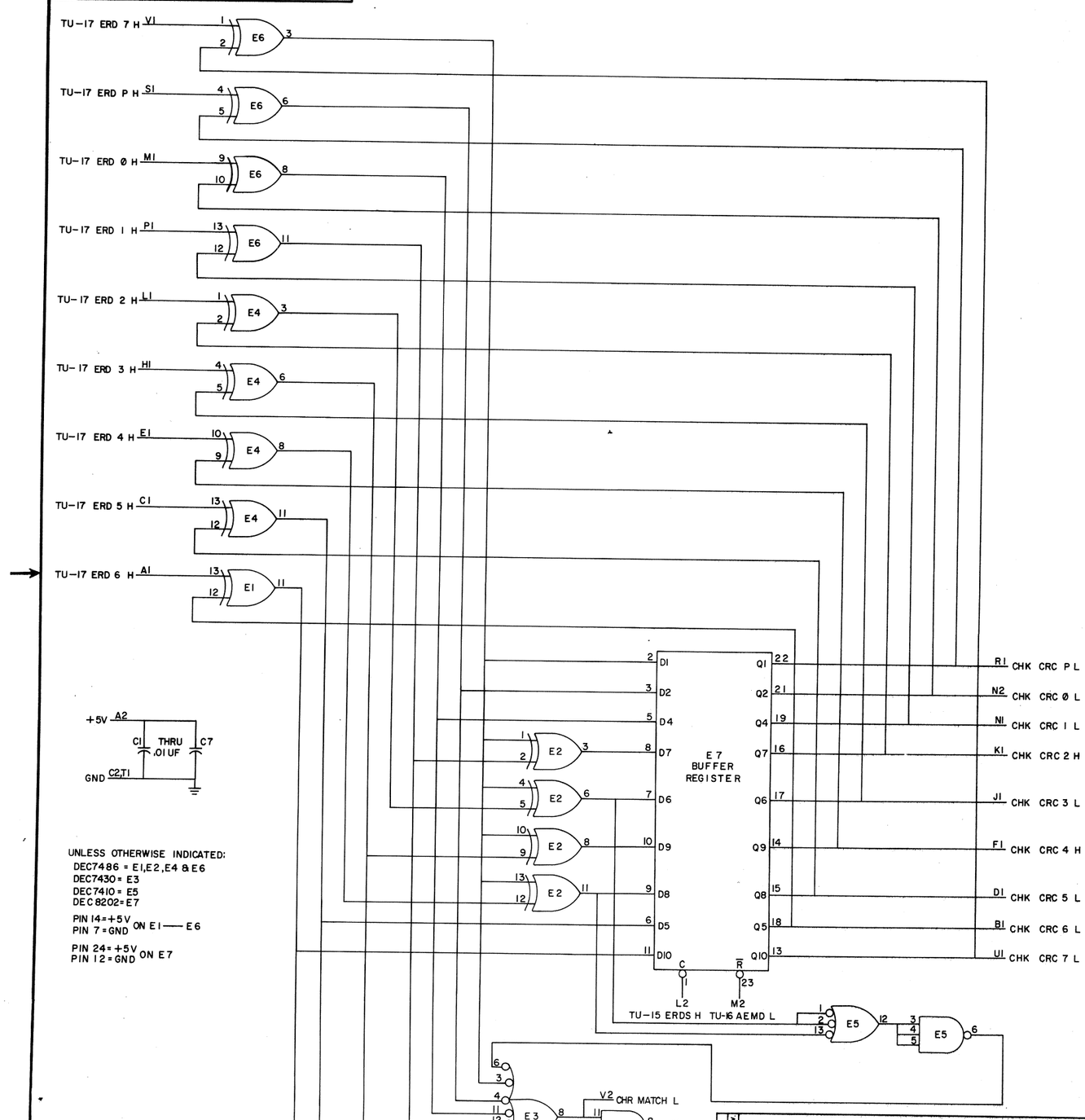


UNLESS OTHERWISE INDICATED:
DEC7486 = E1,E2,E4 & E6
DEC7430 = E3
DEC7410 = E5
DEC8202 = E7
PIN 14 = +5V
PIN 7 = GND ON E1 — E6
PIN 24 = +5V
PIN 12 = GND ON E7

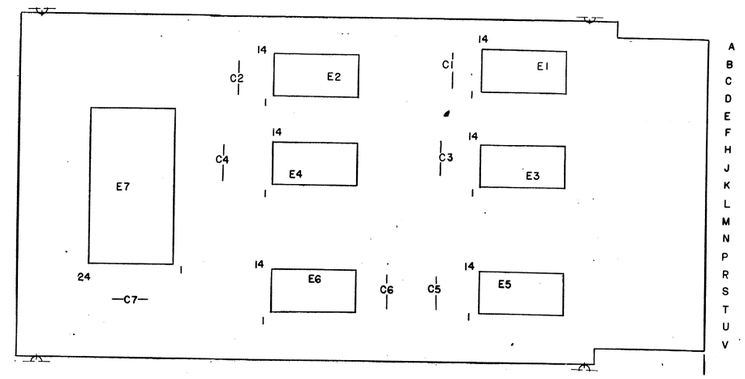


| QTY. | REF. DESIGNATION | DESCRIPTION | DEC PART NO. | ITEM NO. |
|---|---|---|---|---|
| | | PARTS LIST | | |
| 1 | | HANDLE, FLIP CHIP - MAGENTA | 9008337-06 | 11 |
| 2 | | EYELET | 9006732 | 10 |
| 1 | E7 | I.C. DEC 8202 | 1910275 | 9 |
| 4 | E1, 2, 4, 6 | I.C. DEC 7486 | 1910011 | 8 |
| 1 | E3 | I.C. DEC 7430 | 1905578 | 7 |
| 1 | E5 | I.C. DEC 7410 | 1905576 | 6 |
| 7 | C1 - C7 | CAP. .01UF 100V 20% DISC | 1001610 | 5 |
| 1 | | ETCHED CIRCUIT BOARD | 5009696 | 4 |
| | | MODULE ECO HISTORY | B-MH-M896-0-6 | 3 |
| | | ASSY/DRILLING HOLE LAYOUT | D-AH-M896-0-5 | 2 |
| | | X-Y COORDINATE HOLE LOCATION | K-CO-M896-0-4 | 1 |

TRANSISTOR & DIODE CONVERSION CHART

| DEC | EIA | DEC | EIA |
|---|---|---|---|
| | | | |

REVISIONS: CHK | CHG NO. | REV.

DRN. G. COOPER DATE 8-20-71
CHK'D W. MACY DATE 8-25-71
ENG. J. HESSLER DATE 9/14/71
PROD. DATE

digital EQUIPMENT CORPORATION MAYNARD, MASSACHUSETTS

TITLE CRC CHECKER

SIZE D | CODE CS | NUMBER M896-0-1 | REV. A

PRINTED CIRCUIT REV. B

DEC FORM NO. DRD 118

Pink

| SIZE | CODE | NUMBER | REV. |
|---|---|---|---|
| K | WL | TUIØA-Ø-5 | |

| FIRST USED ON OPTION MODEL |
|---|
| TUIØA |

| QTY. | DESCRIPTION | PART NO. | ITEM NO. |
|---|---|---|---|
| | PARTS LIST | | |

| REVISIONS | | |
|---|---|---|
| CHK | CHANGE NO. | REV. |

| | | |
|---|---|---|
| DRN. N.E. Lange | DATE 5-3-72 | digital EQUIPMENT CORPORATION MAYNARD, MASSACHUSETTS |
| CHK'D. G. Kaufman | DATE 5/3/72 | TITLE |
| ENG. Louis Carpenito | DATE 5-3-72 | WIRE LIST (TUIØA) |
| PROJ. ENG. J. Sullivan | DATE 5-3-72 | |
| PROD. R. M. Dam | DATE 5-3-72 | |
| NEXT HIGHER ASSEMBLY D-AD-7008795-0-0 | | |
| SCALE 1/1 | | SIZE K · CODE WL · NUMBER TUIØA-Ø-5 · REV. |
| SHEET 1 OF 1 | | DIST. |

DEC FORM NO. DRB 109

| RUN NAME | A/P | PIN NAME | ORDER PIN | BAY - ORDER | Q | DRAW | MODULE TYPE | OPT | FLAG | Z | C C | LOADING HIGH | LOW | AC | EXTRA | LENGTH EXCEPTIONS | RUN NUMBER |
|---|---|---|---|---|---|---|---|---|---|---|---|---|---|---|---|---|---|
| 556 CLK | H | A25N1 | | 1-01 | H | QKLT | S QKLAT | | | 2 | 1 | | | | | 6-2/8 | 1 |
| 556 CLK | H | A14N1 | | 1-02 | H | QKLT | S QKLAT | | | 2 | 2 | | | | | 5 | 1 |
| 556 CLK | H | B08A2 | | 1-03 | C | QKLT | S M904 | C | | | | | | | | | 1 |
| 556 CLK | H | | | 1 | | | | | | | | 0 | 0 | 0 | 0 | 11-2/8 | 1 |
| 800 CLK | H | A25N2 | | 1-01 | H | QKLT | S QKLAT | | | 2 | 1 | | | | | 6-2/8 | 2 |
| 800 CLK | H | A14N2 | | 1-02 | H | QKLT | S QKLAT | | | 2 | 2 | | | | | 5-2/8 | 2 |
| 800 CLK | H | B08B2 | | 1-03 | C | QKLT | S M904 | C | | | | | | | | | 2 |
| 800 CLK | H | | | 1 | | | | | | | | 0 | 0 | 0 | 0 | 11-4/8 | 2 |
| GND A07K1 | G | A07K1 | | | G | QKLT | S M904 | G | | | | | | | | | 3 |
| GND A07M1 | G | A07M1 | | | G | QKLT | S M904 | G | | | | | | | | | 4 |
| GND A07M2 | G | A07M2 | | | G | QKLT | S M904 | G | | | | | | | | | 5 |
| GND A07R1 | G | A07R1 | | | G | QKLT | S M904 | G | | | | | | | | | 6 |
| GND A07R2 | G | A07R2 | | | G | QKLT | S M904 | G | | | | | | | | | 7 |
| GND A07T2 | G | A07T2 | | | G | QKLT | S M904 | G | | | | | | | | | 8 |
| GND A07U1 | G | A07U1 | | | G | QKLT | S M904 | G | | | | | | | | | 9 |
| GND A07V2 | G | A07V2 | | | G | QKLT | S M904 | G | | | | | | | | | 10 |
| GND A07X1 | G | A07X1 | | | G | QKLT | S M904 | G | | | | | | | | | 11 |
| GND A07X2 | G | A07X2 | | | G | QKLT | S M904 | G | | | | | | | | | 12 |
| GND A07Z1 | G | A07Z1 | | | G | QKLT | S M904 | G | | | | | | | | | 13 |
| GND A07Z2 | G | A07Z2 | | | G | QKLT | S M904 | G | | | | | | | | | 14 |
| GND A08K1 | G | A08K1 | | | G | QKLT | S M904 | G | | | | | | | | | 15 |
| GND A08M1 | G | A08M1 | | | G | QKLT | S M904 | G | | | | | | | | | 16 |
| GND A08M2 | G | A08M2 | | | G | QKLT | S M904 | G | | | | | | | | | 17 |
| GND A08R1 | G | A08R1 | | | G | QKLT | S M904 | G | | | | | | | | | 18 |
| GND A08R2 | G | A08R2 | | | G | QKLT | S M904 | G | | | | | | | | | 19 |
| GND A08T2 | G | A08T2 | | | G | QKLT | S M904 | G | | | | | | | | | 20 |
| GND A08U1 | G | A08U1 | | | G | QKLT | S M904 | G | | | | | | | | | 21 |
| GND A08V2 | G | A08V2 | | | G | QKLT | S M904 | G | | | | | | | | | 22 |
| GND A08X1 | G | A08X1 | | | G | QKLT | S M904 | G | | | | | | | | | 23 |
| GND A08X2 | G | A08X2 | | | G | QKLT | S M904 | G | | | | | | | | | 24 |
| GND A08Z1 | G | A08Z1 | | | G | QKLT | S M904 | G | | | | | | | | | 25 |



| RUN NAME | A/P | PIN NAME | ORDER PIN | BAY - ORDER | Q | DRAW | MODULE TYPE | OPT | FLAG | Z | C C | LOADING HIGH | LOW | AC | EXTRA | LENGTH EXCEPTIONS | RUN NUMBER |
|---|---|---|---|---|---|---|---|---|---|---|---|---|---|---|---|---|---|
| GND A08Z2 | G | A08Z2 | | | G | QKLT | S M904 | G | | | | | | | | | 26 |
| GND A09K1 | G | A09K1 | | | G | QKLT | S M904 | G | | | | | | | | | 27 |
| GND A09M1 | G | A09M1 | | | G | QKLT | S M904 | G | | | | | | | | | 28 |
| GND A09M2 | G | A09M2 | | | G | QKLT | S M904 | G | | | | | | | | | 29 |
| GND A09R1 | G | A09R1 | | | G | QKLT | S M904 | G | | | | | | | | | 30 |
| GND A09R2 | G | A09R2 | | | G | QKLT | S M904 | G | | | | | | | | | 31 |
| GND A09T2 | G | A09T2 | | | G | QKLT | S M904 | G | | | | | | | | | 32 |
| GND A09U1 | G | A09U1 | | | G | QKLT | S M904 | G | | | | | | | | | 33 |
| GND A09V2 | G | A09V2 | | | G | QKLT | S M904 | G | | | | | | | | | 34 |
| GND A09X1 | G | A09X1 | | | G | QKLT | S M904 | G | | | | | | | | | 35 |
| GND A09X2 | G | A09X2 | | | G | QKLT | S M904 | G | | | | | | | | | 36 |
| GND A09Z1 | G | A09Z1 | | | G | QKLT | S M904 | G | | | | | | | | | 37 |
| GND A09Z2 | G | A09Z2 | | | G | QKLT | S M904 | G | | | | | | | | | 38 |
| GND A12L1 | G | A12L1 | | | G | QKLT | S QKLAT | G | 18 | | | | | | | | 39 |
| GND A12N1 | G | A12N1 | | | G | QKLT | S QKLAT | G | 18 | | | | | | | | 40 |
| GND A12R1 | G | A12R1 | | | G | QKLT | S QKLAT | G | 18 | | | | | | | | 41 |
| GND A12T1 | G | A12T1 | | | G | QKLT | S QKLAT | G | 18 | | | | | | | | 42 |
| GND A12V1 | G | A12V1 | | | G | QKLT | S QKLAT | G | 18 | | | | | | | | 43 |
| GND A12X1 | G | A12X1 | | | G | QKLT | S QKLAT | G | 18 | | | | | | | | 44 |
| GND A12Z1 | G | A12Z1 | | | G | QKLT | S QKLAT | G | 18 | | | | | | | | 45 |
| GND A13K1 | G | A13K1 | | | G | QKLT | S QKLAT | G | 18 | | | | | | | | 46 |
| GND A13L2 | G | A13L2 | | | G | QKLT | S QKLAT | G | 18 | | | | | | | | 47 |
| GND A13M1 | G | A13M1 | | | G | QKLT | S QKLAT | G | 18 | | | | | | | | 48 |
| GND A13N2 | G | A13N2 | | | G | QKLT | S QKLAT | G | 18 | | | | | | | | 49 |
| GND A13P1 | G | A13P1 | | | G | QKLT | S QKLAT | G | 18 | | | | | | | | 50 |
| GND A13R2 | G | A13R2 | | | G | QKLT | S QKLAT | G | 18 | | | | | | | | 51 |
| GND A13S1 | G | A13S1 | | | G | QKLT | S QKLAT | G | 18 | | | | | | | | 52 |
| GND A13T2 | G | A13T2 | | | G | QKLT | S QKLAT | G | 18 | | | | | | | | 53 |

| RUN NAME | A/P | PIN NAME | ORDER PIN | BAY - ORDER | Q | DRAW | MODULE TYPE OPT | FLAG | Z | C C | LOADING HIGH | LOW | AC | EXTRA | LENGTH EXCEPTIONS | RUN NUMBER |
|---|---|---|---|---|---|---|---|---|---|---|---|---|---|---|---|---|
| GND A13U1 | G | A13U1 | | | G | QKLT | S | QKLAT G 18 | | | | | | | | 54 |
| GND A13V2 | G | A13V2 | | | G | QKLT | S | QKLAT G 18 | | | | | | | | 55 |
| GND A13W1 | G | A13W1 | | | G | QKLT | S | QKLAT G 18 | | | | | | | | 56 |
| GND A13X2 | G | A13X2 | | | G | QKLT | S | QKLAT G 18 | | | | | | | | 57 |
| GND A13Y1 | G | A13Y1 | | | G | QKLT | S | QKLAT G 18 | | | | | | | | 58 |
| GND A13Z2 | G | A13Z2 | | | G | QKLT | S | QKLAT G 18 | | | | | | | | 59 |
| GND A14K2 | G | A14K2 | | | G | QKLT | S | QKLAT G 18 | | | | | | | | 60 |
| GND A14M2 | G | A14M2 | | | G | QKLT | S | QKLAT G 18 | | | | | | | | 61 |
| GND A14P2 | G | A14P2 | | | G | QKLT | S | QKLAT G 18 | | | | | | | | 62 |
| GND A14S2 | G | A14S2 | | | G | QKLT | S | QKLAT G 18 | | | | | | | | 63 |
| GND A14U2 | G | A14U2 | | | G | QKLT | S | QKLAT G 18 | | | | | | | | 64 |
| GND A14W2 | G | A14W2 | | | G | QKLT | S | QKLAT G 18 | | | | | | | | 65 |
| GND A14Y2 | G | A14Y2 | | | G | QKLT | S | QKLAT G 18 | | | | | | | | 66 |
| GND A15L1 | G | A15L1 | | | G | QKLT | S | QKLAT G 18 | | | | | | | | 67 |
| GND A15R1 | G | A15R1 | | | G | QKLT | S | QKLAT G 18 | | | | | | | | 68 |
| GND A15V1 | G | A15V1 | | | G | QKLT | S | QKLAT G 18 | | | | | | | | 69 |
| GND A15Z1 | G | A15Z1 | | | G | QKLT | S | QKLAT G 18 | | | | | | | | 70 |
| GND A23L1 | G | A23L1 | | | G | QKLT | S | QKLAT G 18 | | | | | | | | 71 |
| GND A23N1 | G | A23N1 | | | G | QKLT | S | QKLAT G 18 | | | | | | | | 72 |
| GND A23R1 | G | A23R1 | | | G | QKLT | S | QKLAT G 18 | | | | | | | | 73 |
| GND A23T1 | G | A23T1 | | | G | QKLT | S | QKLAT G 18 | | | | | | | | 74 |
| GND A23V1 | G | A23V1 | | | G | QKLT | S | QKLAT G 18 | | | | | | | | 75 |
| GND A23X1 | G | A23X1 | | | G | QKLT | S | QKLAT G 18 | | | | | | | | 76 |
| GND A23Z1 | G | A23Z1 | | | G | QKLT | S | QKLAT G 18 | | | | | | | | 77 |
| GND A24K1 | G | A24K1 | | | G | QKLT | S | QKLAT G 18 | | | | | | | | 78 |
| GND A24L2 | G | A24L2 | | | G | QKLT | S | QKLAT G 18 | | | | | | | | 79 |
| GND A24M1 | G | A24M1 | | | G | QKLT | S | QKLAT G 18 | | | | | | | | 80 |
| GND A24N2 | G | A24N2 | | | G | QKLT | S | QKLAT G 18 | | | | | | | | 81 |



| RUN NAME | A/P | PIN NAME | ORDER PIN | BAY - ORDER | Q | DRAW | MODULE TYPE OPT | FLAG | Z | C C | LOADING HIGH | LOW | AC | EXTRA | LENGTH EXCEPTIONS | RUN NUMBER |
|---|---|---|---|---|---|---|---|---|---|---|---|---|---|---|---|---|
| GND A24P1 | G | A24P1 | | | G | QKLT | S | QKLAT G 18 | | | | | | | | 82 |
| GND A24R2 | G | A24R2 | | | G | QKLT | S | QKLAT G 18 | | | | | | | | 83 |
| GND A24S1 | G | A24S1 | | | G | QKLT | S | QKLAT G 18 | | | | | | | | 84 |
| GND A24T2 | G | A24T2 | | | G | QKLT | S | QKLAT G 18 | | | | | | | | 85 |
| GND A24U1 | G | A24U1 | | | G | QKLT | S | QKLAT G 18 | | | | | | | | 86 |
| GND A24V2 | G | A24V2 | | | G | QKLT | S | QKLAT G 18 | | | | | | | | 87 |
| GND A24W1 | G | A24W1 | | | G | QKLT | S | QKLAT G 18 | | | | | | | | 88 |
| GND A24X2 | G | A24X2 | | | G | QKLT | S | QKLAT G 18 | | | | | | | | 89 |
| GND A24Y1 | G | A24Y1 | | | G | QKLT | S | QKLAT G 18 | | | | | | | | 90 |
| GND A24Z2 | G | A24Z2 | | | G | QKLT | S | QKLAT G 18 | | | | | | | | 91 |
| GND A25K2 | G | A25K2 | | | G | QKLT | S | QKLAT G 18 | | | | | | | | 92 |
| GND A25M2 | G | A25M2 | | | G | QKLT | S | QKLAT G 18 | | | | | | | | 93 |
| GND A25P2 | G | A25P2 | | | G | QKLT | S | QKLAT G 18 | | | | | | | | 94 |
| GND A25S2 | G | A25S2 | | | G | QKLT | S | QKLAT G 18 | | | | | | | | 95 |
| GND A25U2 | G | A25U2 | | | G | QKLT | S | QKLAT G 18 | | | | | | | | 96 |
| GND A25W2 | G | A25W2 | | | G | QKLT | S | QKLAT G 18 | | | | | | | | 97 |
| GND A25Y2 | G | A25Y2 | | | G | QKLT | S | QKLAT G 18 | | | | | | | | 98 |
| GND A26L1 | G | A26L1 | | | G | QKLT | S | QKLAT G 18 | | | | | | | | 99 |
| GND A26R1 | G | A26R1 | | | G | QKLT | S | QKLAT G 18 | | | | | | | | 100 |
| GND A26V1 | G | A26V1 | | | G | QKLT | S | QKLAT G 18 | | | | | | | | 101 |
| GND A26Z1 | G | A26Z1 | | | G | QKLT | S | QKLAT G 18 | | | | | | | | 102 |
| GND B07C2 | G | B07B1 | | 1-01 | | QKLT | S | M904 | 1 | | | | | | 0-1/8 | 103 |
| GND B07C2 | G | B07C2 | | 1-02 | G | QKLT | S | M904 G | | | | | | | | 103 |
| GND B07C2 | G | | | 1 | | | | | | | 0 | 0 | 0 | 0 | 0-1/8 | 103 |
| GND B08C2 | G | B08B1 | | 1-01 | | QKLT | S | M904 | 1 | | | | | | 0-1/8 | 104 |
| GND B08C2 | G | B08C2 | | 1-02 | G | QKLT | S | M904 G | | | | | | | | 104 |
| GND B08C2 | G | | | 1 | | | | | | | 0 | 0 | 0 | 0 | 0-1/8 | 104 |
| GND B09C2 | G | B09B1 | | 1-01 | | QKLT | S | M904 | 1 | | | | | | 0-1/8 | 105 |
| GND B09C2 | G | B09C2 | | 1-02 | G | QKLT | S | M904 G | | | | | | | | 105 |
| GND B09C2 | G | | | 1 | | | | | | | 0 | 0 | 0 | 0 | 0-1/8 | 105 |
| GND B12B1 | G | B12B1 | | | G | QKLT | S | QKLAT G 18 | | | | | | | | 106 |

| RUN NAME | A/P | PIN NAME | ORDER PIN | BAY = ORDER | Q | DRAW | MODULE TYPE OPT | FLAG | Z | C C | LOADING HIGH | LOW | AC | EXTRA | LENGTH EXCEPTIONS | RUN NUMBER |
|---|---|---|---|---|---|---|---|---|---|---|---|---|---|---|---|---|
| GND B13A1 | G | B13A1 | | | G | QKLT | S | QKLAT G | 18 | | | | | | | 107 |
| GND B13B2 | G | B13B2 | | | G | QKLT | S | QKLAT G | 18 | | | | | | | 108 |
| GND B14A2 | G | B14A2 | | | G | QKLT | S | QKLAT G | 18 | | | | | | | 109 |
| GND B23B1 | G | B23B1 | | | G | QKLT | S | QKLAT G | 18 | | | | | | | 110 |
| GND B24A1 | G | B24A1 | | | G | QKLT | S | QKLAT G | 18 | | | | | | | 111 |
| GND B24B2 | G | B24B2 | | | G | QKLT | S | QKLAT G | 18 | | | | | | | 112 |
| GND B25A2 | G | B25A2 | | | G | QKLT | S | QKLAT G | 18 | | | | | | | 113 |
| SPARE 1 | | A25V1 | | 1=01 | H | QKLT | S | QKLAT | 2 | 1 | | | | | 6=2/8 | 114 |
| SPARE 1 | | A14V1 | | 1=02 | H | QKLT | S | QKLAT | 2 | 2 | | | | | 3=6/8 | 114 |
| SPARE 1 | | B09A2 | | 1=03 | C | QKLT | S | M904 C | | | | | | | | 114 |
| SPARE 1 | | | | 1 | | | | | | | 0 | 0 | 0 | 0 | 10=0/8 | 114 |
| SPARE 2 | | A25V2 | | 1=01 | H | QKLT | S | QKLAT | 2 | 1 | | | | | 6=2/8 | 115 |
| SPARE 2 | | A14V2 | | 1=02 | H | QKLT | S | QKLAT | 2 | 2 | | | | | 4 | 115 |
| SPARE 2 | | B09B2 | | 1=03 | C | QKLT | S | M904 C | | | | | | | | 115 |
| SPARE 2 | | | | 1 | | | | | | | 0 | 0 | 0 | 0 | 10=2/8 | 115 |
| SPARE 3 | | A26U1 | | 1=01 | H | QKLT | S | QKLAT | 2 | 1 | | | | | 6=2/8 | 116 |
| SPARE 3 | | A15U1 | | 1=02 | H | QKLT | S | QKLAT | 2 | 2 | | | | | 4=4/8 | 116 |
| SPARE 3 | | B09D2 | | 1=03 | C | QKLT | S | M904 C | | | | | | | | 116 |
| SPARE 3 | | | | 1 | | | | | | | 0 | 0 | 0 | 0 | 10=6/8 | 116 |
| T RECORD DATA | 1H | A23P1 | | 1=01 | H | QKLT | S | QKLAT | 2 | 1 | | | | | 6=2/8 | 117 |
| T RECORD DATA | 1H | A12P1 | | 1=02 | H | QKLT | S | QKLAT | 2 | 2 | | | | | 3 | 117 |
| T RECORD DATA | 1H | A07N2 | | 1=03 | C | QKLT | S | M904 C | | | | | | | | 117 |
| T RECORD DATA | 1H | | | 1 | | | | | | | 0 | 0 | 0 | 0 | 9=2/8 | 117 |
| T SET TAPE FUNCTION | L | A26P1 | | 1=01 | H | QKLT | S | QKLAT | 2 | 1 | | | | | 6=2/8 | 118 |
| T SET TAPE FUNCTION | L | A15P1 | | 1=02 | H | QKLT | S | QKLAT | 2 | 2 | | | | | 6 | 118 |
| T SET TAPE FUNCTION | L | B07D2 | | 1=03 | C | QKLT | S | M904 C | | | | | | | | 118 |
| T SET TAPE FUNCTION | L | | | 1 | | | | | | | 0 | 0 | 0 | 0 | 12=2/8 | 118 |
| TB 200 | H | A23U1 | | 1=01 | H | QKLT | S | QKLAT | 2 | 1 | | | | | 6=2/8 | 119 |
| TB 200 | H | A12U1 | | 1=02 | H | QKLT | S | QKLAT | 2 | 2 | | | | | 2=3/8 | 119 |
| TB 200 | H | A09N2 | | 1=03 | C | QKLT | S | M904 C | | | | | | | | 119 |
| TB 200 | H | | | 1 | | | | | | | 0 | 0 | 0 | 0 | 8=5/8 | 119 |
| TB 556 | H | A23U2 | | 1=01 | H | QKLT | S | QKLAT | 2 | 1 | | | | | 6=2/8 | 120 |
| TB 556 | H | A12U2 | | 1=02 | H | QKLT | S | QKLAT | 2 | 2 | | | | | 2=6/8 | 120 |
| TB 556 | H | A09P2 | | 1=03 | C | QKLT | S | M904 C | | | | | | | | 120 |
| TB 556 | H | | | 1 | | | | | | | 0 | 0 | 0 | 0 | 9=0/8 | 120 |
| TB 7CH | H | A25M1 | | 1=01 | H | QKLT | S | QKLAT | 2 | 1 | | | | | 6=2/8 | 121 |
| TB 7CH | H | A14M1 | | 1=02 | H | QKLT | S | QKLAT | 2 | 2 | | | | | 4=6/8 | 121 |
| TB 7CH | H | A08Y2 | | 1=03 | C | QKLT | S | M904 C | | | | | | | | 121 |
| TB 7CH | H | | | 1 | | | | | | | 0 | 0 | 0 | 0 | 11=0/8 | 121 |



| RUN NAME | A/P | PIN NAME | ORDER PIN | BAY = ORDER | Q | DRAW | MODULE TYPE OPT | FLAG | Z | C C | LOADING HIGH | LOW | AC | EXTRA | LENGTH EXCEPTIONS | RUN NUMBER |
|---|---|---|---|---|---|---|---|---|---|---|---|---|---|---|---|---|
| TB 800 | H | A23V2 | | 1=01 | H | QKLT | S | QKLAT | 2 | 1 | | | | | 6=2/8 | 122 |
| TB 800 | H | A12V2 | | 1=02 | H | QKLT | S | QKLAT | 2 | 2 | | | | | 2=6/8 | 122 |
| TB 800 | H | A09S2 | | 1=03 | C | QKLT | S | M904 C | | | | | | | | 122 |
| TB 800 | H | | | 1 | | | | | | | 0 | 0 | 0 | 0 | 9=0/8 | 122 |
| TB EN MOTION DLY (B) | L | A25R2 | | 1=01 | H | QKLT | S | QKLAT | 2 | 1 | | | | | 6=2/8 | 123 |
| TB EN MOTION DLY (B) | L | A14R2 | | 1=02 | H | QKLT | S | QKLAT | 2 | 2 | | | | | 5=4/8 | 123 |
| TB EN MOTION DLY (B) | L | B07B2 | | 1=03 | C | QKLT | S | M904 C | | | | | | | | 123 |
| TB EN MOTION DLY (B) | L | | | 1 | | | | | | | 0 | 0 | 0 | 0 | 11=6/8 | 123 |
| TB FWD/BOT | H | A23M2 | | 1=01 | H | QKLT | S | QKLAT | 2 | 1 | | | | | 6=2/8 | 124 |
| TB FWD/BOT | H | A12M2 | | 1=02 | H | QKLT | S | QKLAT | 2 | 2 | | | | | 3 | 124 |
| TB FWD/BOT | H | A08P2 | | 1=03 | C | QKLT | S | M904 C | | | | | | | | 124 |
| TB FWD/BOT | H | | | 1 | | | | | | | 0 | 0 | 0 | 0 | 9=2/8 | 124 |
| TB MOVE (B) | H | A24P2 | | 1=01 | H | QKLT | S | QKLAT | 2 | 1 | | | | | 6=2/8 | 125 |
| TB MOVE (B) | H | A13P2 | | 1=02 | H | QKLT | S | QKLAT | 2 | 2 | | | | | 4=4/8 | 125 |
| TB MOVE (B) | H | A07W2 | | 1=03 | C | QKLT | S | M904 C | | | | | | | | 125 |
| TB MOVE (B) | H | | | 1 | | | | | | | 0 | 0 | 0 | 0 | 10=6/8 | 125 |
| TB R 0/0 | 1H | A26S1 | | 1=01 | H | QKLT | S | QKLAT | 2 | 1 | | | | | 6=2/8 | 126 |
| TB R 0/0 | 1H | A15S1 | | 1=02 | H | QKLT | S | QKLAT | 2 | 2 | | | | | 5=2/8 | 126 |
| TB R 0/0 | 1H | B08A1 | | 1=03 | C | QKLT | S | M904 C | | | | | | | | 126 |
| TB R 0/0 | 1H | | | 1 | | | | | | | 0 | 0 | 0 | 0 | 11=4/8 | 126 |
| TB R 0/1 | 1H | A25T2 | | 1=01 | H | QKLT | S | QKLAT | 2 | 1 | | | | | 6=2/8 | 127 |
| TB R 0/1 | 1H | A14T2 | | 1=02 | H | QKLT | S | QKLAT | 2 | 2 | | | | | 4=6/8 | 127 |
| TB R 0/1 | 1H | A08Y1 | | 1=03 | C | QKLT | S | M904 C | | | | | | | | 127 |
| TB R 0/1 | 1H | | | 1 | | | | | | | 0 | 0 | 0 | 0 | 11=0/8 | 127 |
| TB R 1/7 | 1H | A25S1 | | 1=01 | H | QKLT | S | QKLAT | 2 | 1 | | | | | 6=2/8 | 128 |
| TB R 1/7 | 1H | A14S1 | | 1=02 | H | QKLT | S | QKLAT | 2 | 2 | | | | | 4 | 128 |
| TB R 1/7 | 1H | A08V1 | | 1=03 | C | QKLT | S | M904 C | | | | | | | | 128 |
| TB R 1/7 | 1H | | | 1 | | | | | | | 0 | 0 | 0 | 0 | 10=2/8 | 128 |
| TB R 2/6 | 1H | A24S2 | | 1=01 | H | QKLT | S | QKLAT | 2 | 1 | | | | | 6=2/8 | 129 |
| TB R 2/6 | 1H | A13S2 | | 1=02 | H | QKLT | S | QKLAT | 2 | 2 | | | | | 3=4/8 | 129 |
| TB R 2/6 | 1H | A08T1 | | 1=03 | C | QKLT | S | M904 C | | | | | | | | 129 |
| TB R 2/6 | 1H | | | 1 | | | | | | | 0 | 0 | 0 | 0 | 9=6/8 | 129 |
| TB R 4/5 | 1H | A24T1 | | 1=01 | H | QKLT | S | QKLAT | 2 | 1 | | | | | 6=2/8 | 130 |
| TB R 4/5 | 1H | A13T1 | | 1=02 | H | QKLT | S | QKLAT | 2 | 2 | | | | | 3=4/8 | 130 |
| TB R 4/5 | 1H | A08S1 | | 1=03 | C | QKLT | S | M904 C | | | | | | | | 130 |
| TB R 4/5 | 1H | | | 1 | | | | | | | 0 | 0 | 0 | 0 | 9=6/8 | 130 |
| TB R 8/4 | 1H | A23T2 | | 1=01 | H | QKLT | S | QKLAT | 2 | 1 | | | | | 6=2/8 | 131 |
| TB R 8/4 | 1H | A12T2 | | 1=02 | H | QKLT | S | QKLAT | 2 | 2 | | | | | 3=4/8 | 131 |
| TB R 8/4 | 1H | A08P1 | | 1=03 | C | QKLT | S | M904 C | | | | | | | | 131 |
| TB R 8/4 | 1H | | | 1 | | | | | | | 0 | 0 | 0 | 0 | 9=6/8 | 131 |
| TB R A/3 | 1H | A23S2 | | 1=01 | H | QKLT | S | QKLAT | 2 | 1 | | | | | 6=2/8 | 132 |
| TB R A/3 | 1H | A12S2 | | 1=02 | H | QKLT | S | QKLAT | 2 | 2 | | | | | 3=2/8 | 132 |
| TB R A/3 | 1H | A08N1 | | 1=03 | C | QKLT | S | M904 C | | | | | | | | 132 |
| TB R A/3 | 1H | | | 1 | | | | | | | 0 | 0 | 0 | 0 | 9=4/8 | 132 |

| RUN NAME | A/P | PIN NAME | ORDER PIN | BAY = ORDER | Q | DRAW OPT | MODULE TYPE | FLAG | Z | C C | LOADING HIGH | LOW | AC | EXTRA | LENGTH EXCEPTIONS | RUN NUMBER |
|---|---|---|---|---|---|---|---|---|---|---|---|---|---|---|---|---|
| TB R B/2 | 1H | A23S1 | | 1=01 | H | | QKLT S | QKLAT | 2 | 1 | | | | | 6=2/8 | 133 |
| TB R B/2 | 1H | A12S1 | | 1=02 | H | | QKLT S | QKLAT | 2 | 2 | | | | | 3=2/8 | 133 |
| TB R B/2 | 1H | A08L1 | | 1=03 | C | | QKLT S | M904 | C | | | | | | | 133 |
| TB R B/2 | 1H | | | 1 | | | | | | | 0 | 0 | 0 | 0 | 9=4/8 | 133 |
| TB R PARITY | 1H | A25T1 | | 1=01 | H | | QKLT S | QKLAT | 2 | 1 | | | | | 6=2/8 | 134 |
| TB R PARITY | 1H | A14T1 | | 1=02 | H | | QKLT S | QKLAT | 2 | 2 | | | | | 4=2/8 | 134 |
| TB R PARITY | 1H | A08W1 | | 1=03 | C | | QKLT S | M904 | C | | | | | | | 134 |
| TB R PARITY | 1H | | | 1 | | | | | | | 0 | 0 | 0 | 0 | 10=4/8 | 134 |
| TB READ SKEW OVER | H | A26M1 | | 1=01 | H | | QKLT S | QKLAT | 2 | 1 | | | | | 6=2/8 | 135 |
| TB READ SKEW OVER | H | A15M1 | | 1=02 | H | | QKLT S | QKLAT | 2 | 2 | | | | | 5=6/8 | 135 |
| TB READ SKEW OVER | H | B08D2 | | 1=03 | C | | QKLT S | M904 | C | | | | | | | 135 |
| TB READ SKEW OVER | H | | | 1 | | | | | | | 0 | 0 | 0 | 0 | 12=0/8 | 135 |
| TB REWIND/EOT | H | A23N2 | | 1=01 | H | | QKLT S | QKLAT | 2 | 1 | | | | | 6=2/8 | 136 |
| TB REWIND/EOT | H | A12N2 | | 1=02 | H | | QKLT S | QKLAT | 2 | 2 | | | | | 3=2/8 | 136 |
| TB REWIND/EOT | H | A08S2 | | 1=03 | C | | QKLT S | M904 | C | | | | | | | 136 |
| TB REWIND/EOT | H | | | 1 | | | | | | | 0 | 0 | 0 | 0 | 9=4/8 | 136 |
| TB SEL 0 (B) | H | A23P2 | | 1=01 | H | | QKLT S | QKLAT | 2 | 1 | | | | | 6=2/8 | 137 |
| TB SEL 0 (B) | H | A12P2 | | 1=02 | H | | QKLT S | QKLAT | 2 | 2 | | | | | 3=2/8 | 137 |
| TB SEL 0 (B) | H | A07P2 | | 1=03 | C | | QKLT S | M904 | C | | | | | | | 137 |
| TB SEL 0 (B) | H | | | 1 | | | | | | | 0 | 0 | 0 | 0 | 9=4/8 | 137 |
| TB SEL 1 (B) | H | A23R2 | | 1=01 | H | | QKLT S | QKLAT | 2 | 1 | | | | | 6=2/8 | 138 |
| TB SEL 1 (B) | H | A12R2 | | 1=02 | H | | QKLT S | QKLAT | 2 | 2 | | | | | 3=4/8 | 138 |
| TB SEL 1 (B) | H | A07S2 | | 1=03 | C | | QKLT S | M904 | C | | | | | | | 138 |
| TB SEL 1 (B) | H | | | 1 | | | | | | | 0 | 0 | 0 | 0 | 9=6/8 | 138 |
| TB SEL 2 (B) | H | A24R1 | | 1=01 | H | | QKLT S | QKLAT | 2 | 1 | | | | | 6=2/8 | 139 |
| TB SEL 2 (B) | H | A13R1 | | 1=02 | H | | QKLT S | QKLAT | 2 | 2 | | | | | 4 | 139 |
| TB SEL 2 (B) | H | A07U2 | | 1=03 | C | | QKLT S | M904 | C | | | | | | | 139 |
| TB SEL 2 (B) | H | | | 1 | | | | | | | 0 | 0 | 0 | 0 | 10=2/8 | 139 |
| TB SET DWN (B) | H | A24V1 | | 1=01 | H | | QKLT S | QKLAT | 2 | 1 | | | | | 6=2/8 | 140 |
| TB SET DWN (B) | H | A13V1 | | 1=02 | H | | QKLT S | QKLAT | 2 | 2 | | | | | 2=6/8 | 140 |
| TB SET DWN (B) | H | A09U2 | | 1=03 | C | | QKLT S | M904 | C | | | | | | | 140 |
| TB SET DWN (B) | H | | | 1 | | | | | | | 0 | 0 | 0 | 0 | 9=0/8 | 140 |
| TB SP REV | H | A23M1 | | 1=01 | H | | QKLT S | QKLAT | 2 | 1 | | | | | 6=2/8 | 141 |
| TB SP REV | H | A12M1 | | 1=02 | H | | QKLT S | QKLAT | 2 | 2 | | | | | 2=4/8 | 141 |
| TB SP REV | H | A08N2 | | 1=03 | C | | QKLT S | M904 | C | | | | | | | 141 |
| TB SP REV | H | | | 1 | | | | | | | 0 | 0 | 0 | 0 | 8=6/8 | 141 |
| TB START (B) | H | A25P1 | | 1=01 | H | | QKLT S | QKLAT | 2 | 1 | | | | | 6=2/8 | 142 |
| TB START (B) | H | A14P1 | | 1=02 | H | | QKLT S | QKLAT | 2 | 2 | | | | | 5 | 142 |
| TB START (B) | H | A07Y2 | | 1=03 | C | | QKLT S | M904 | C | | | | | | | 142 |
| TB START (B) | H | | | 1 | | | | | | | 0 | 0 | 0 | 0 | 11=2/8 | 142 |
| TB START DLY | L | A25U1 | | 1=01 | H | | QKLT S | QKLAT | 2 | 1 | | | | | 6=2/8 | 143 |
| TB START DLY | L | A14U1 | | 1=02 | H | | QKLT S | QKLAT | 2 | 2 | | | | | 3=4/8 | 143 |
| TB START DLY | L | A09Y2 | | 1=03 | C | | QKLT S | M904 | C | | | | | | | 143 |
| TB START DLY | L | | | 1 | | | | | | | 0 | 0 | 0 | 0 | 9=6/8 | 143 |



| RUN NAME | A/P | PIN NAME | ORDER PIN | BAY = ORDER | Q | DRAW OPT | MODULE TYPE | FLAG | Z | C C | LOADING HIGH | LOW | AC | EXTRA | LENGTH EXCEPTIONS | RUN NUMBER |
|---|---|---|---|---|---|---|---|---|---|---|---|---|---|---|---|---|
| TB TUR (B) | H | A24U2 | | 1=01 | H | | QKLT S | QKLAT | 2 | 1 | | | | | 6=2/8 | 144 |
| TB TUR (B) | H | A13U2 | | 1=02 | H | | QKLT S | QKLAT | 2 | 2 | | | | | 3 | 144 |
| TB TUR (B) | H | A09W2 | | 1=03 | C | | QKLT S | M904 | C | | | | | | | 144 |
| TB TUR (B) | H | | | 1 | | | | | | | 0 | 0 | 0 | 0 | 9=2/8 | 144 |
| TB UNLOAD/WRL | H | A24N1 | | 1=01 | H | | QKLT S | QKLAT | 2 | 1 | | | | | 6=2/8 | 145 |
| TB UNLOAD/WRL | H | A13N1 | | 1=02 | H | | QKLT S | QKLAT | 2 | 2 | | | | | 3=6/8 | 145 |
| TB UNLOAD/WRL | H | A08U2 | | 1=03 | C | | QKLT S | M904 | C | | | | | | | 145 |
| TB UNLOAD/WRL | H | | | 1 | | | | | | | 0 | 0 | 0 | 0 | 10=0/8 | 145 |
| TB WRITE LPCC (B) | H | A25R1 | | 1=01 | H | | QKLT S | QKLAT | 2 | 1 | | | | | 6=2/8 | 146 |
| TB WRITE LPCC (B) | H | A14R1 | | 1=02 | H | | QKLT S | QKLAT | 2 | 2 | | | | | 5=2/8 | 146 |
| TB WRITE LPCC (B) | H | B07A2 | | 1=03 | C | | QKLT S | M904 | C | | | | | | | 146 |
| TB WRITE LPCC (B) | H | | | 1 | | | | | | | 0 | 0 | 0 | 0 | 11=4/8 | 146 |
| TB WRITING/RWS | H | A24M2 | | 1=01 | H | | QKLT S | QKLAT | 2 | 1 | | | | | 6=2/8 | 147 |
| TB WRITING/RWS | H | A13M2 | | 1=02 | H | | QKLT S | QKLAT | 2 | 2 | | | | | 4=2/8 | 147 |
| TB WRITING/RWS | H | A08W2 | | 1=03 | C | | QKLT S | M904 | C | | | | | | | 147 |
| TB WRITING/RWS | H | | | 1 | | | | | | | 0 | 0 | 0 | 0 | 10=4/8 | 147 |
| WD 0/0 | 1H | A26K1 | | 1=01 | H | | QKLT S | QKLAT | 2 | 1 | | | | | 6=2/8 | 148 |
| WD 0/0 | 1H | A15K1 | | 1=02 | H | | QKLT S | QKLAT | 2 | 2 | | | | | 6=4/8 | 148 |
| WD 0/0 | 1H | B07A1 | | 1=03 | C | | QKLT S | M904 | C | | | | | | | 148 |
| WD 0/0 | 1H | | | 1 | | | | | | | 0 | 0 | 0 | 0 | 12=6/8 | 148 |
| WD 0/1 | 1H | A25L2 | | 1=01 | H | | QKLT S | QKLAT | 2 | 1 | | | | | 6=2/8 | 149 |
| WD 0/1 | 1H | A14L2 | | 1=02 | H | | QKLT S | QKLAT | 2 | 2 | | | | | 6 | 149 |
| WD 0/1 | 1H | A07Y1 | | 1=03 | C | | QKLT S | M904 | C | | | | | | | 149 |
| WD 0/1 | 1H | | | 1 | | | | | | | 0 | 0 | 0 | 0 | 12=2/8 | 149 |
| WD 1/7 | 1H | A25K1 | | 1=01 | H | | QKLT S | QKLAT | 2 | 1 | | | | | 6=2/8 | 150 |
| WD 1/7 | 1H | A14K1 | | 1=02 | H | | QKLT S | QKLAT | 2 | 2 | | | | | 5=2/8 | 150 |
| WD 1/7 | 1H | A07V1 | | 1=03 | C | | QKLT S | M904 | C | | | | | | | 150 |
| WD 1/7 | 1H | | | 1 | | | | | | | 0 | 0 | 0 | 0 | 11=4/8 | 150 |
| WD 2/6 | 1H | A24K2 | | 1=01 | H | | QKLT S | QKLAT | 2 | 1 | | | | | 6=2/8 | 151 |
| WD 2/6 | 1H | A13K2 | | 1=02 | H | | QKLT S | QKLAT | 2 | 2 | | | | | 4=6/8 | 151 |
| WD 2/6 | 1H | A07T1 | | 1=03 | C | | QKLT S | M904 | C | | | | | | | 151 |
| WD 2/6 | 1H | | | 1 | | | | | | | 0 | 0 | 0 | 0 | 11=0/8 | 151 |
| WD 4/5 | 1H | A24L1 | | 1=01 | H | | QKLT S | QKLAT | 2 | 1 | | | | | 6=2/8 | 152 |
| WD 4/5 | 1H | A13L1 | | 1=02 | H | | QKLT S | QKLAT | 2 | 2 | | | | | 4=4/8 | 152 |
| WD 4/5 | 1H | A07S1 | | 1=03 | C | | QKLT S | M904 | C | | | | | | | 152 |
| WD 4/5 | 1H | | | 1 | | | | | | | 0 | 0 | 0 | 0 | 10=6/8 | 152 |
| WD 8/4 | 1H | A23L2 | | 1=01 | H | | QKLT S | QKLAT | 2 | 1 | | | | | 6=2/8 | 153 |
| WD 8/4 | 1H | A12L2 | | 1=02 | H | | QKLT S | QKLAT | 2 | 2 | | | | | 4 | 153 |
| WD 8/4 | 1H | A07P1 | | 1=03 | C | | QKLT S | M904 | C | | | | | | | 153 |
| WD 8/4 | 1H | | | 1 | | | | | | | 0 | 0 | 0 | 0 | 10=2/8 | 153 |
| WD A/3 | 1H | A23K2 | | 1=01 | H | | QKLT S | QKLAT | 2 | 1 | | | | | 6=2/8 | 154 |
| WD A/3 | 1H | A12K2 | | 1=02 | H | | QKLT S | QKLAT | 2 | 2 | | | | | 3=6/8 | 154 |
| WD A/3 | 1H | A07N1 | | 1=03 | C | | QKLT S | M904 | C | | | | | | | 154 |
| WD A/3 | 1H | | | 1 | | | | | | | 0 | 0 | 0 | 0 | 10=0/8 | 154 |

| RUN NAME | A/P | PIN NAME | ORDER PIN | BAY = ORDER | Q | DRAW OPT | MODULE TYPE FLAG | Z | C C | LOADING HIGH | LOW | AC | EXTRA | LENGTH EXCEPTIONS | RUN NUMBER |
|---|---|---|---|---|---|---|---|---|---|---|---|---|---|---|---|
| WD 8/2 | 1H | A23K1 | | 1=01 | H | QKLT S | QKLAT | 2 | 1 | | | | | 6=2/8 | 155 |
| WD 8/2 | 1H | A12K1 | | 1=02 | H | QKLT S | QKLAT | 2 | 2 | | | | | 3=2/8 | 155 |
| WD 8/2 | 1H | A07L1 | | 1=03 | C | QKLT S | M904 C | | | | | | | | 155 |
| WD 8/2 | 1H | | | 1 | | | | | | 0 | 0 | 0 | 0 | 9=4/8 | 155 |
| WD PARITY | 1H | A25L1 | | 1=01 | H | QKLT S | QKLAT | 2 | 1 | | | | | 6=2/8 | 156 |
| WD PARITY | 1H | A14L1 | | 1=02 | H | QKLT S | QKLAT | 2 | 2 | | | | | 5=4/8 | 156 |
| WD PARITY | 1H | A07W1 | | 1=03 | C | QKLT S | M904 C | | | | | | | | 156 |
| WD PARITY | 1H | | | 1 | | | | | | 0 | 0 | 0 | 0 | 11=6/8 | 156 |