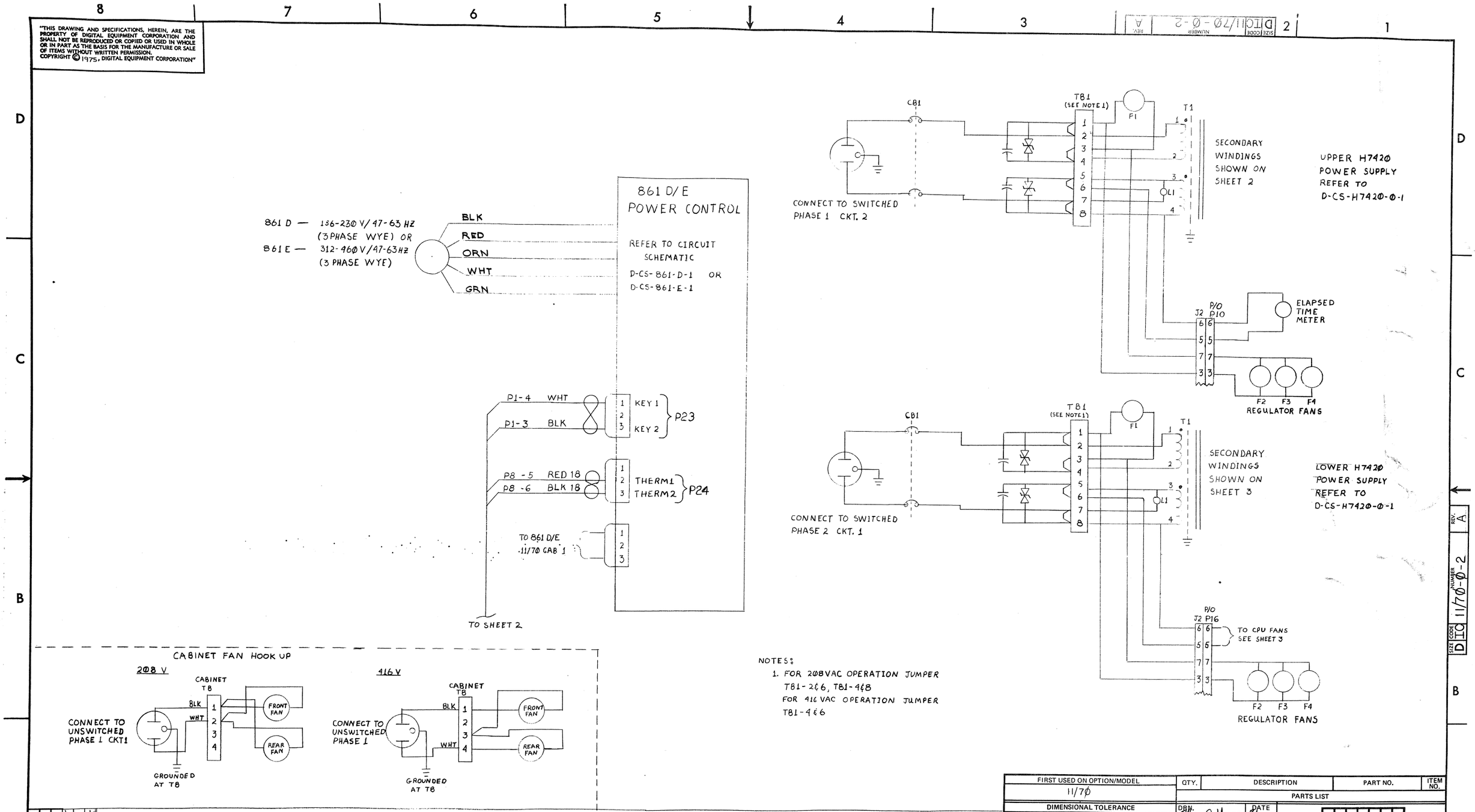

NOTES:
1. FOR 208VAC OPERATION JUMPER T81-2&6, T81-4&8
FOR 416 VAC OPERATION JUMPER T81-4&6

REVISIONS			
CHK	CHANGE NO.	REV.	
4-22-75	11/70-00001	A	G. Mackie 4-22-75 T. NORTHRUP

FIRST USED ON OPTION/MODEL	QTY.	DESCRIPTION	PART NO.	ITEM NO.
11/70		PARTS LIST		

DIMENSIONAL TOLERANCE
DIMENSIONS ARE MILLIMETERS / INCHES
UNLESS OTHERWISE SPECIFIED

MILLIMETERS	INCHES	ANGLES
X.XX = ±0.10	.XXX = ±.005	±0° 30'
X.X = ±0.5	.XX = ±.02	
X = ±2	.X = ±.1	

THIRD ANGLE PROJECTION
REMOVE BURRS AND BREAK SHARP CORNERS SURFACE QUALITY ✓
MATERIAL
FINISH

		DATE
DRN.	Thomas Cutter	3/19/75
CHK'D	J. Hong	3/20/75
ENG.	Peter Tsoh	3/21/75
PROJ. ENG.	Thomas Cutter	3/21/75
PROD.	[illegible]	3/24/75

NEXT HIGHER ASSY. B-DD-11/70-0
SCALE
SHEET 1 OF 3

digital

TITLE
POWER SYSTEM CONFIGURATION

SIZE	CODE	NUMBER	REV.
D	IC	11/70-0-2	A

DIST.

DEC FORM NO. DRD 102-C

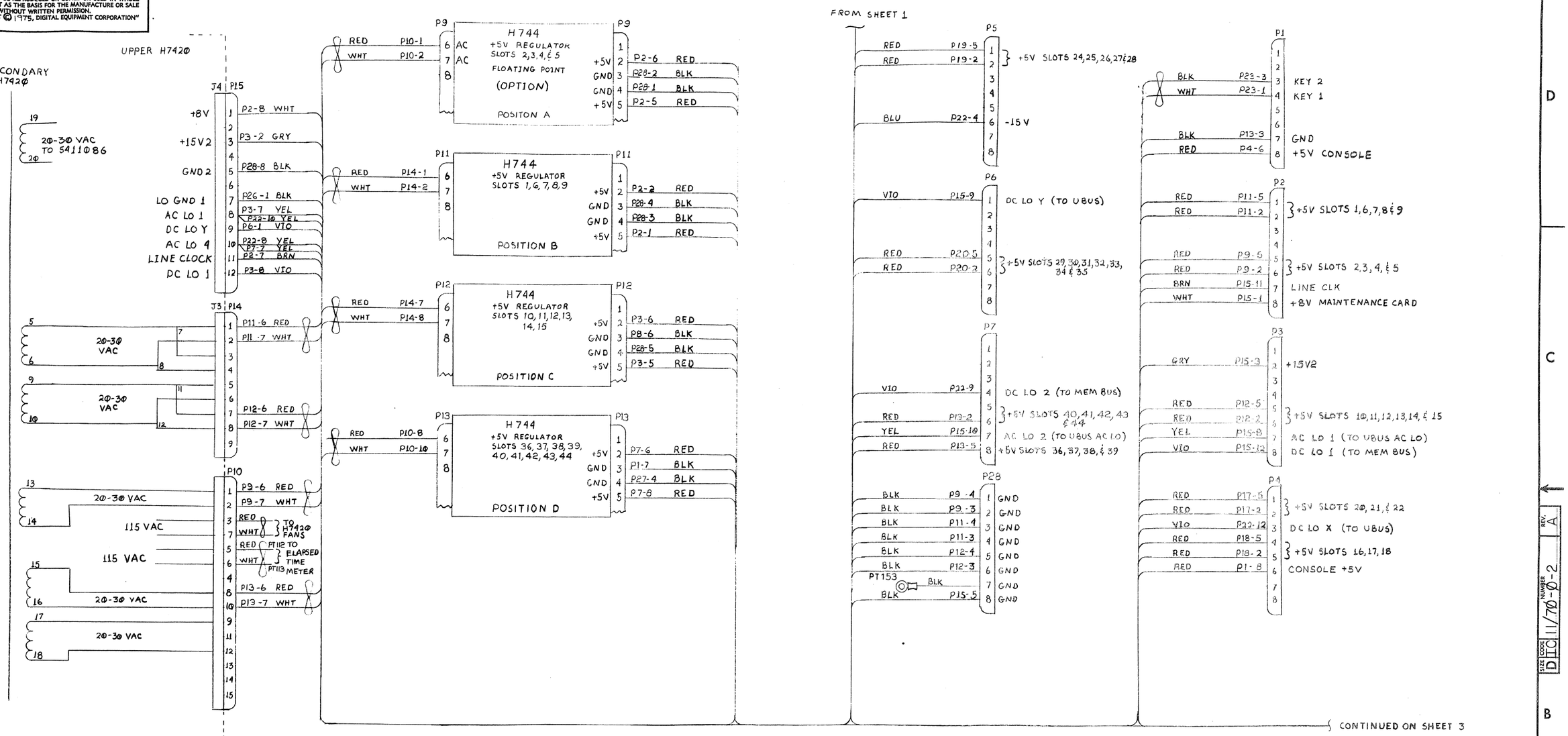

FIRST USED ON OPTION/MODEL	QTY.	DESCRIPTION	PART NO.	ITEM NO.
11/70		PARTS LIST		

DIMENSIONAL TOLERANCE
DIMENSIONS ARE MILLIMETERS / INCHES UNLESS OTHERWISE SPECIFIED

MILLIMETERS	INCHES	ANGLES
X.XX = ±0.10	.XXX = ±.005	±0° 30'
X.X = ±0.5	.XX = ±.02	
X = ±2	.X = ±.1	

THIRD ANGLE PROJECTION
REMOVE BURRS AND BREAK SHARP CORNERS SURFACE QUALITY ✓
MATERIAL
FINISH

		DATE
DRN.	Thomas A. Hyde	3/14/75
CHK'D	D. Mosby	3/21/75
ENG.	Keith Dixon	3/21/75
PROJ. ENG.	Thomas A. Hyde	3/21/75
PROD.	R. C. Pinto	3/24/75

NEXT HIGHER ASSY. B-DD-11/70-0
SCALE
SHEET 2 OF 3

digital

TITLE POWER SYSTEM CONFIGURATION

SIZE	CODE	NUMBER	REV.
D	IC	11/70-0-2	A

DIST.

REVISIONS: REV. / CHANGE NO. / CHK.

DEC FORM NO. DRD 102-C

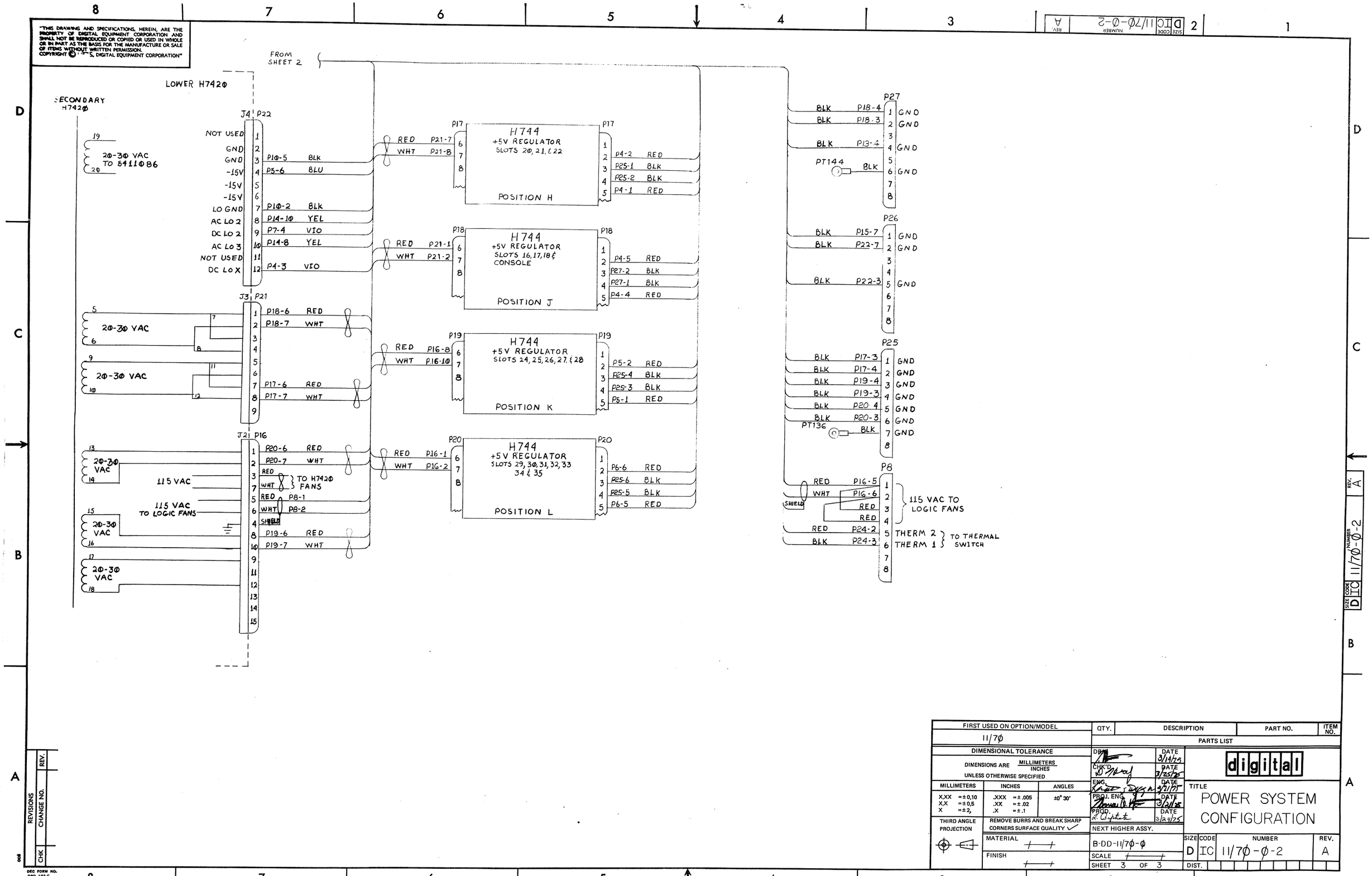

FIRST USED ON OPTION/MODEL	QTY.	DESCRIPTION	PART NO.	ITEM NO.
11/7Ø		PARTS LIST		

DIMENSIONAL TOLERANCE
DIMENSIONS ARE MILLIMETERS / INCHES UNLESS OTHERWISE SPECIFIED

MILLIMETERS	INCHES	ANGLES
X.XX = ±0.10	.XXX = ±.005	±0° 30'
X.X = ±0.5	.XX = ±.02	
X = ±2	.X = ±.1	

THIRD ANGLE PROJECTION

REMOVE BURRS AND BREAK SHARP CORNERS SURFACE QUALITY ✓

MATERIAL —

FINISH —

		DATE
DRN		3/14/75
CHK'D		3/25/75
ENG.		3/21/75
PROJ. ENG.		3/21/75
PROD.		3/24/75

NEXT HIGHER ASSY. B-DD-11/7Ø-Ø

SCALE —

SHEET 3 OF 3

digital

TITLE POWER SYSTEM CONFIGURATION

SIZE	CODE	NUMBER	REV.
D	IC	11/7Ø-Ø-2	A

DIST.

REVISIONS: REV. | CHANGE NO. | CHK

DEC FORM NO. DRD 102-C

SIZE D CODE IC NUMBER 11/7Ø-Ø-2 REV. A

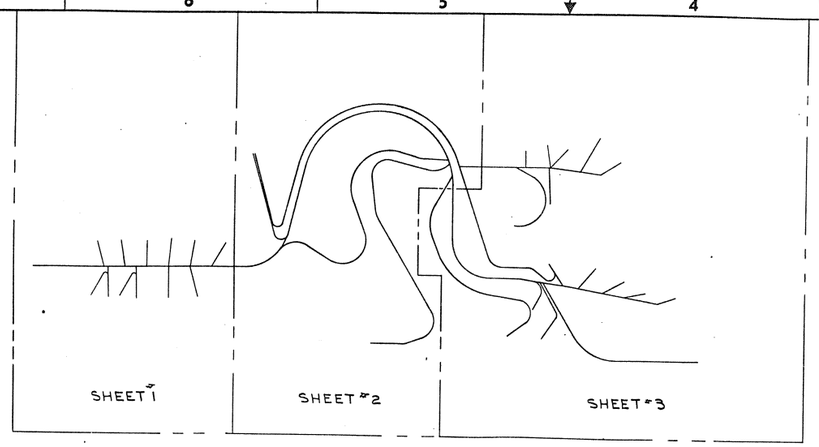

NOTES:

1.) USE TIE WRAPS (X) ITEM #10 APPROX. EVERY THREE (3) INCHES WHEN NECESSARY, AND AT EVERY BREAKOUT POINT.

2.) COMPONENTS TO BE LABELED WITH COMPONENT IDENTIFIER, USING BRADY MARKERS, OR DECALS 7409872-0-0.

3.) FOR POINT TO POINT WIRING REFER TO D-WL-7011051-0-1

4.) IN AREA INDICATED ENCLOSE MAIN HARNESS WITH ZIPPER TUBING, (ITEM #25). ZIPPER MUST BE ROUTED ALONG THE OUTSIDE CURVE OF BUNDLE. INSURE THAT EXCESS TUBING IS TUCKED IN AT END.

5.) TWIST TOGETHER
P22-7 BLK #18 AWG.
P22-8 YEL #18 AWG.
P22-9 VIO #18 AWG.
P22-10 YEL #18 AWG.
P22-12 VIO #18 AWG.
P15-7 BLK #18 AWG.
P15-8 YEL #18 AWG.
P15-10 YEL #18 AWG.
P15-11 BRN #18 AWG.
P15-12 VIO #18 AWG.

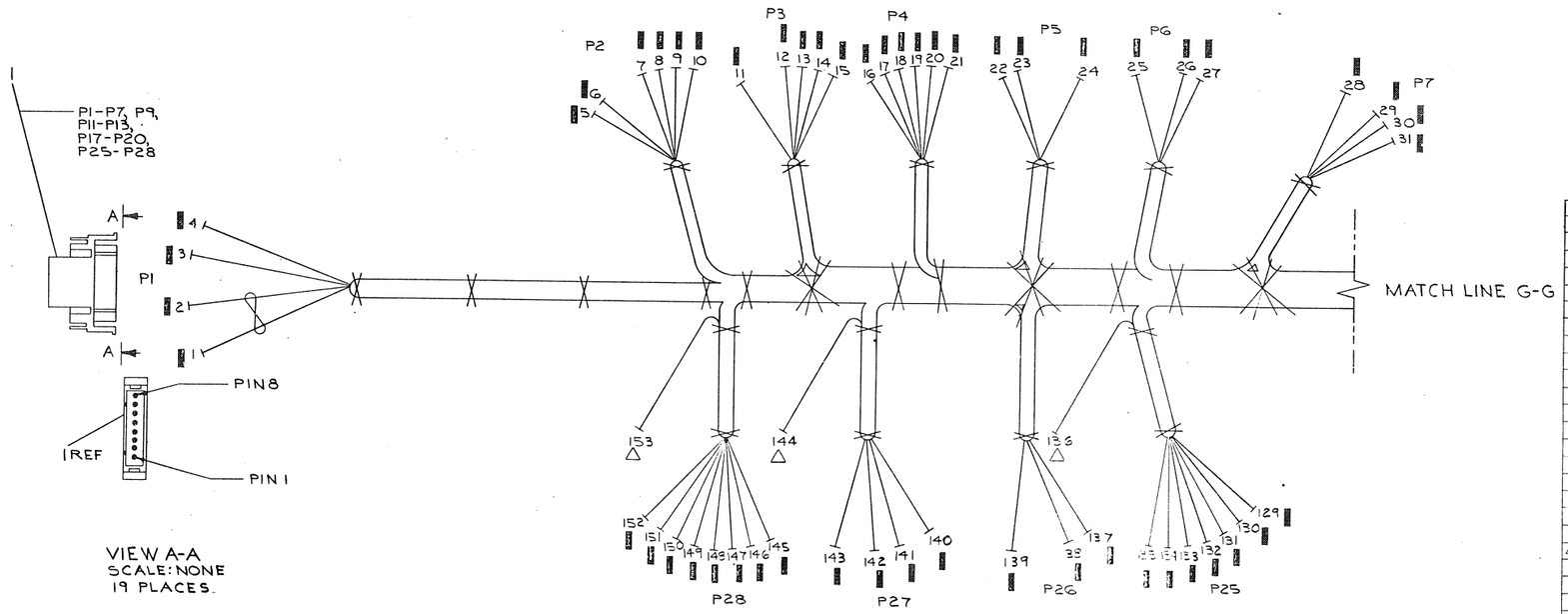

VIEW A-A
SCALE: NONE
19 PLACES.

SCALE
0 IN 6 IN 12 IN

DO NOT REDUCE
FOR MANUFACTURING PURPOSES ONLY

SYM	QTY	DESCRIPTION	DWG. PART NO.	ITEM NO.
	8.25	WIRE, #18 AWG BLK/RED TWP	9107430-02	29
	8.25	WIRE, #18 AWG BLK/WHT TWP	9107430-09	28
	A/R	TUBING, BLK .38IN	9107245-00	27
	A/R	TUBING, BLK	9107243	26
	A/R	TUBING, ZIPPER	9107679	25
	A/R	TUBING #14 AWG. BLK	9107295-00	24
	5.6	CABLE, 2 COND - SHIELD	9107761	23
	13.3'	WIRE, #18 AWG. RED	9107360-22	22
	25'	WIRE, #18 AWG. WHT	9107360-99	21
	18.4	WIRE, #18 AWG. BLK	9107360-00	20
	6.1'	WIRE, #18 AWG. BRN	9107360-11	19
	21.3	WIRE, #18 AWG VIO	9107360-77	18
	18.6	WIRE, #18 AWG. YEL	9107360-44	17
	15.4	WIRE, #14 AWG. RED/WHT TWP	9107440-29	16
	6'	WIRE, #14 AWG. WHT	9107370-99	15
	13.6	WIRE, #14 AWG. RED	9107370-22	14
	4.3'	WIRE, #14 AWG. BLU	9107370-66	13
	6'	WIRE, #14 AWG. GRAY	9107370-88	12
	117'	WIRE #14 AWG. BLK	9107370-00	11
X	125	TIE WRAP	9007032	10
△	5	CONN., SOLDERLESS	9007928-00	9
▯	6	SOCKET, FEMALE	1209379-00	8
▮	42	PIN, MALE	1209378-00	7
	2	CONN. 9 PIN	1209351-09	6
	2	CONN. 12 PIN	1209351-12	5
	2	CONN. 15 PIN	1209351-15	4
	2	CONN. 3 PIN	1209351-03	3
	1	HOUSING 8 PIN	1209340-00	2
	19	CONN. 8 PIN	1209340-01	1

UNLESS OTHERWISE SPECIFIED DIMENSIONS ARE IN INCHES

ANGLES ±0° 30'	CLASS OF ACCURACY (CHECK ONE)	NOMINAL DIMENSION RANGE INCHES					
		OVER 0 TO 6	OVER 6 TO 12	OVER 12 TO 48	OVER 48 TO 120	OVER 120 TO 480	OVER 480 TO 120
SURFACE QUALITY IN MICROINCHES	MEDIUM	±.004	±.012	±.016	±.016	±.024	±.04
	PREFERRED	±.012	±.016	±.025	±.04	±.063	±0.1

QUANTITY & VARIATION

THIRD ANGLE PROJECTION

REMOVE BURRS AND BREAK SHARP CORNERS

DO NOT SCALE DWG.

MATERIAL: SEE PARTS LIST

FINISH

DRN
CHK'D
ENG
PROJ. ENG.
PROD.

NEXT HIGHER ASSY: EUA-11/70-0-0

SCALE 1/1

SHEET 1 OF 3

FIRST USED ON 11/70

digital

TITLE: POWER HARNESS 11/70

SIZE E | CODE IA | NUMBER 7011051-0-0 | REV.

DIST.

REVISIONS: REV. | CHANGE NO. | CHK.

DWG. PART NO. 7011051-0-0

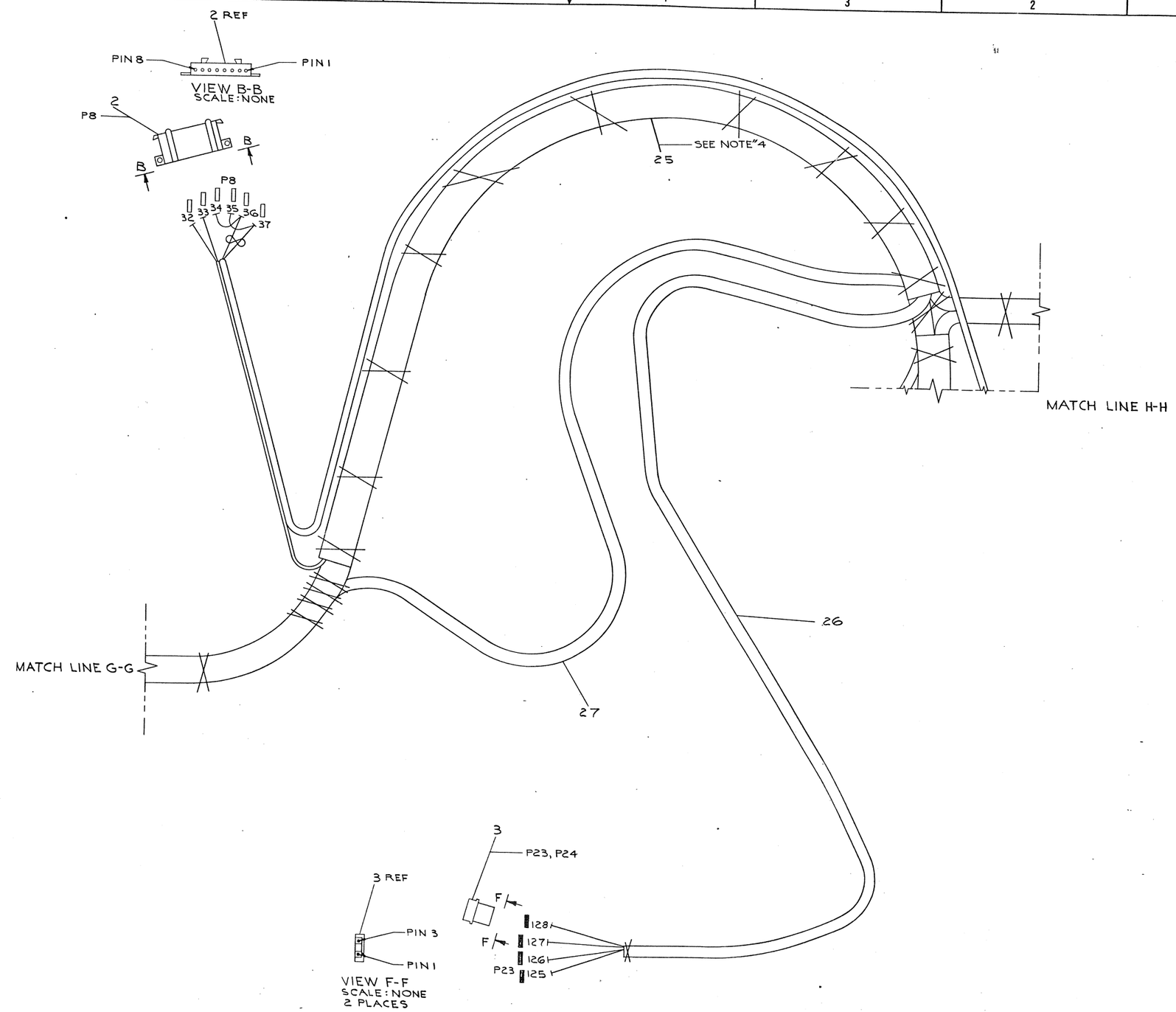

REVISIONS		
CHK	CHANGE NO.	REV.

TITLE	SIZE	CODE	NUMBER	REV.
POWER HARNESS 11/70	E	IA	7011051-0-0	
SCALE 1/1	SHEET 2 OF 3	DIST.		

SIZE E CODE IA NUMBER 7011051-0-0 REV.

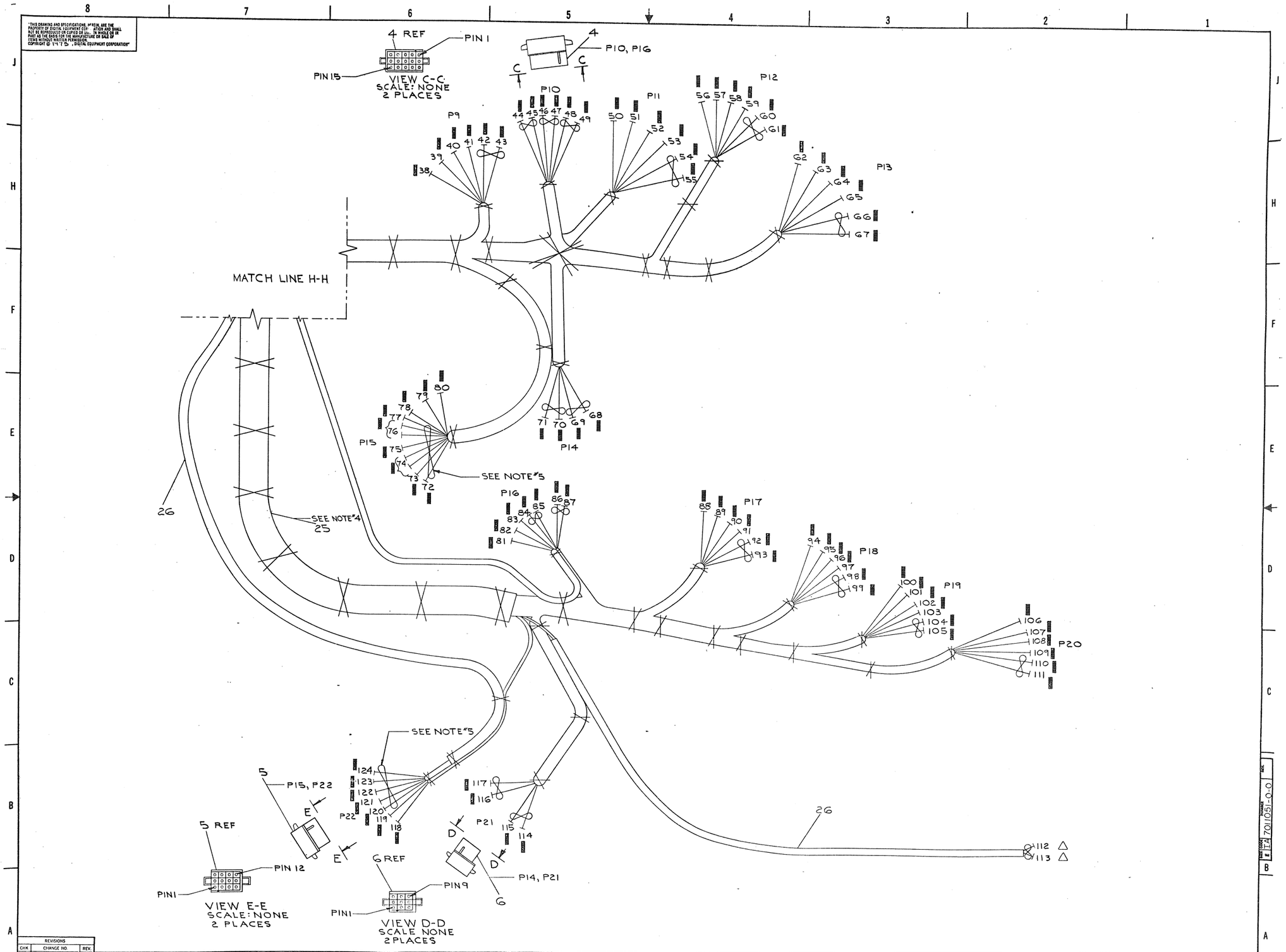

REVISIONS		
CHK	CHANGE NO.	REV.

TITLE	SIZE	CODE	NUMBER	REV.
POWER HARNESS 11/70	E	IA	7011051-0-0	

SCALE 1/1 SHEET 1 OF 1 DATE

DIGITAL CODE E IA 7011051-0-0 REV.

WIRE TABLE

FROM	TO	FROM	TO
P1-1	P2-1	P1-21	P2-21
P1-2	P2-2	P1-22	P2-22
P1-3	P2-3	P1-23	P2-23
P1-4	P2-4	P1-24	P2-24
P1-5	P2-5	P1-25	P2-25
P1-6	P2-6	P1-26	P2-26
P1-7	P2-7	P1-27	P2-27
P1-8	P2-8	P1-28	P2-28
P1-9	P2-9	P1-29	P2-29
P1-10	P2-10	P1-30	P2-30
P1-11	P2-11	P1-31	P2-31
P1-12	P2-12	P1-32	P2-32
P1-13	P2-13	P1-33	P2-33
P1-14	P2-14	P1-34	P2-34
P1-15	P2-15	P1-35	P2-35
P1-16	P2-16	P1-36	P2-36
P1-17	P2-17	P1-37	P2-37
P1-18	P2-18	P1-38	P2-38
P1-19	P2-19	P1-39	P2-39
P1-20	P2-20	P1-40	P2-40

LEGEND

NUMBER	DIM "X"	PRECUT LENGTH	REMARKS
BC06R-01	1FT	1FT 1.5IN ±1IN	SEE PRE-CUT VIEW C-C
BC06R-02	2FT	2FT 1.5IN ±1 IN	
BC06R-03	3FT	3FT 1.5IN ±1 IN	
BC06R-04	4FT	4FT 1.5IN ±1 IN	
BC06R-05	4FT6IN	4FT 7.5IN ± 1.5IN	
BC06R-06	6FT	6FT 1.5IN ± 2IN	
BC06R-08	8 FT	8 FT 1.5IN ± 2IN	
BC06R-10	10 FT	10 FT 1.5IN ± 2IN	
BC06R-12	12 FT	12 FT 1.5IN ± 3IN	
BC06R-20	20FT	20FT 1.5IN ± 3IN	
BC06R-25	25FT	25FT 1.5IN ± 3IN	
BC06R-30	30FT	30FT 1.5IN ± 6IN	
BC06R-50	50FT	50FT 1.5IN ± 1.0 FT	
BC06R-60	60FT	60FT 1.5IN ± 1.2FT	
BC06R-75	75 FT	75 FT 1.5IN ± 1.5 FT	
BC06R-A0	100FT	100FT 1.5IN ± 2 FT	
BC06R-07	7 FT	7FT 1.5IN ± 2IN.	SEE PRE-CUT VIEW C-C

NOTES:

1. INSPECTION & TEST STAMPS TO BE PLACED AT EACH END OF THE CABLE ASSEMBLY.
2. DRAIN WIRE CONNECTS TO PIN NO 40.
3. RUBBER STAMP INFORMATION SHOWN USING INK (ITEM 3) & ART WORK DEC NO. A-DC-7411699-0-0
4. STAMP APPLICABLE OPTION DASH NO. ACCORDING TO LENGTH.
5. REMOVE SHIELD .75 FROM END OF PRECUT CABLE (SEE VIEW C-C).
6. COVER EXPOSED DRAIN WIRE WITH ITEM 4 PRIOR TO ASSY (BOTH ENDS)

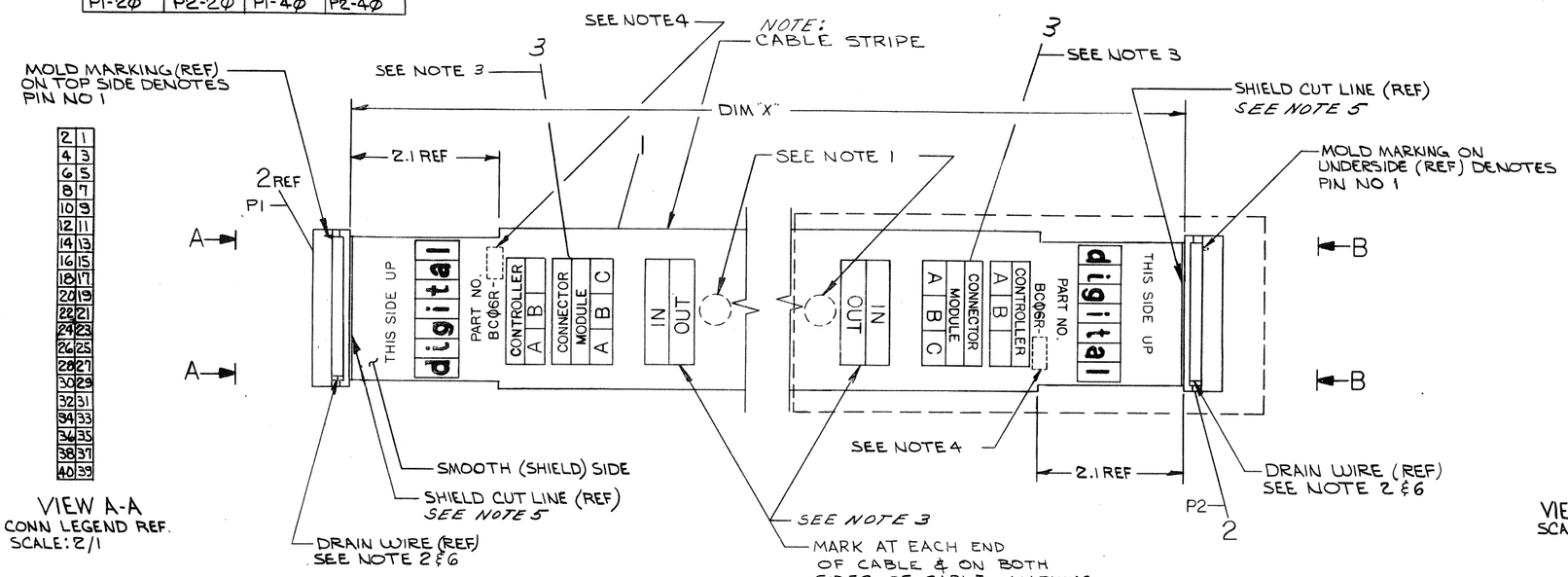

VIEW A-A
CONN LEGEND REF.
SCALE: 2/1

VIEW B-B
SCALE: 2/1

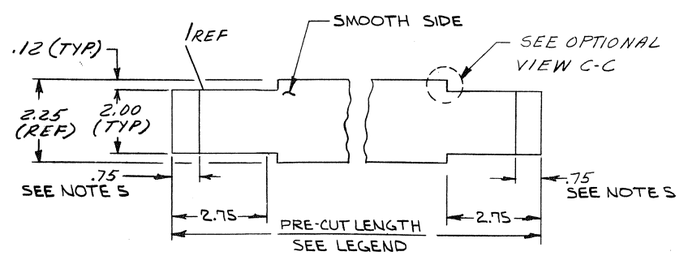

VIEW C-C
PRE-CUT VIEW
SCALE: NONE

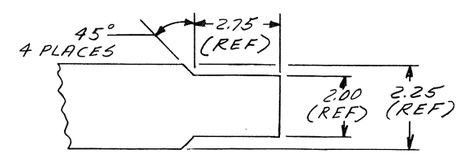

OPTIONAL VIEW C-C
PRE-CUT VIEW
SCALE: NONE

A/R	PLASTIC TAPE	3612511-0	4
A/R	INK	4901150	3
2	CONNECTOR, 40 SOCKET	1211206	2
A/R	CABLE, 40 COND FLAT W/SHIELD	17-00034	1
QTY.	DESCRIPTION	PART NO.	ITEM NO.

PARTS LIST

FIRST USED ON OPTION/MODEL: RP04

UNLESS OTHERWISE SPECIFIED DIMENSION IN INCHES. TOLERANCES
DECIMALS: .XXX = .005, .XX = .02, .X = .1
ANGLES: ±0° 30'
REMOVE BURRS AND BREAK SHARP CORNERS SURFACE QUALITY ✓

MATERIAL: SEE PARTS LIST
FINISH: —

DRN. D. Le Clair DATE 12-22-73
CHK'D DATE 3-25-74
ENG. DATE 3-25-74
PROJ. ENG. D. Lignos DATE 4/17/74
PROD. DATE 4/17/74

NEXT HIGHER ASSY.: E-IA-7009807-0-0, E-IA-7009808-0-0
SCALE NONE
SHEET 1 OF 1

digital EQUIPMENT CORPORATION MAYNARD MASSACHUSETTS

TITLE: BC06R I/O CABLE

SIZE D | CODE UA | NUMBER BC06R-0-0 | REV. C

REV.	CHANGE NO.	CHK
A	BC06R-00001	
B	BC06R-00002	
C	BC06R-00003	

W. DUNHAM, L. CONDON, D. LIGNOS

BRUNING 40-107 15968
DEC FORM NO DRD 100-A

DIGITAL EQUIPMENT CORPORATION
MAYNARD, MASSACHUSETTS

PARTS LIST

MADE BY Ken Duggan DATE 3/14/75	CHECKED D. Healy DATE 3/17/75	SECTION
ENG Thomas A. Northrup DATE 3/26/75	PROD Don Weaver DATE 3/24/75	ISSUED SECT.

ITEM NO.	DWG NO./PART NO.	DESCRIPTION	QUANTITY/VARIATION
	ZR-002-RD	Basic Diagnostic Kit for 9 trk magtape	*
	ZR-002-RE	Basic Diagnostic for RK05 Cartridge	*
	EK-1170-MM-001	11/70 Systems and Maintenance Manual	1
	EB-04526-75	11 Peripherals and interfacing handbook	1
	EB-04588-75	11/70 Processor Handbook	1
	EK-KB11B-TM	KB11 Maintenance Manual	1
	MP-11/70	Customer Print Set	1
	ED-04738-75	Dec Supplies List	1
	EK-MJ11-MM-001	Maintenance Manual MJ11	1
	12012392-01	H960C Cab Filter	1
	9007221	AGC 5A Fuse	5
	9007226	AGC 15A Fuse	5
	12010754	Key on/off switch	2
	1212392-01	MJ11 Cabinet Door Filter	4
	EH-03396-73	PDP-11 Instruction Card	1
	EJ-01235-74	Daily Log	1
	EK-861AB-MM-002	861-D/E POWER SUPPLY MANUAL	1
	EN-01862-03	Q.C. CHECK LIST	REF
	* Shipment of Diagnostic Kit is conditional upon the type of Media on the system		

TITLE	ASSY NO.	SIZE	CODE	NUMBER	REV.	ECO NO.
Central Processor	B-DD-11/70-0 SHEET 1 OF 1	A	PL	11/70-0-3	A	11/70-00002

DIST.

DEC FORM DEC 16-(325)-1031-N870
DRA 110

MJ11 TO 861 POWER CONNECTIONS	
MJ11	TO 861
MEMORY Ø	PHASE 3-CAB 1
MEMORY 1	PHASE 1-CAB 1
MEMORY 2	PHASE 2-CAB 1
MEMORY 3	PHASE 3-CAB 1
MEMORY 4	PHASE 1-CAB MJ11-AC
MEMORY 5	PHASE 2-CAB MJ11-AC
MEMORY 6	PHASE 3 CAB MJ11-AC
MEMORY 7	PHASE 1-CAB MJ11-AC

NOTES:

1. SYSTEM EXPANSION WILL FOLLOW THESE RULES. (A) ALL TU16 OPTIONS WILL TAKE POSITIONS TO THE RIGHT OF 11/70 MEM. UNIBUS INTERFACE WILL BE LEFT OF CPU 2 CAB MAX. FOLLOWED BY RS04, RS03 AND LIKE OPTIONS.
2. SHIPPING BRKT TO BE USED IN THE FOLLOWING HOLE LOCATIONS IF APPLICABLE: IF BOTTOM HOLE OF MEM SLIDE IS #14 BRKT #12 WILL BE MTD IN HOLE # 22. IF #35 HOLE, BRKT MTD IN HOLE # 43 IF #43 HOLE, BRKT MTD IN HOLE # 56 IF #77 HOLE, BRKT MTD IN HOLE # 85.
3. ADDITIONL CABLE TROUGH ASSY #7011027 SUPPLIED WITH MJ11-AC OR AD ASSY TO BE ATTACHED TO CAB 1 PER DETAIL "B".
4. FOR CABLE ROUTING IN CABLE TROUGHS BETWEEN CAB 1 & MJ11-AC OR AD SEE DETAIL "C".
5. INSTALL (861-D HARNESS) SUPPLIED WITH MJ11. FROM 3 PIN CONN, LOCATED ON 861-D OR E (FRONT) TO MJ11-AC 3 PIN CONN, LOCATED ON 861-D OR E (FRONT) OF CAB 1.
6. JUMPER ASSY SUPPLIED WITH MJ11 TO BE GROUNDED TO GROUND STUD ON CAB 1 USING PART SUPPLIED.

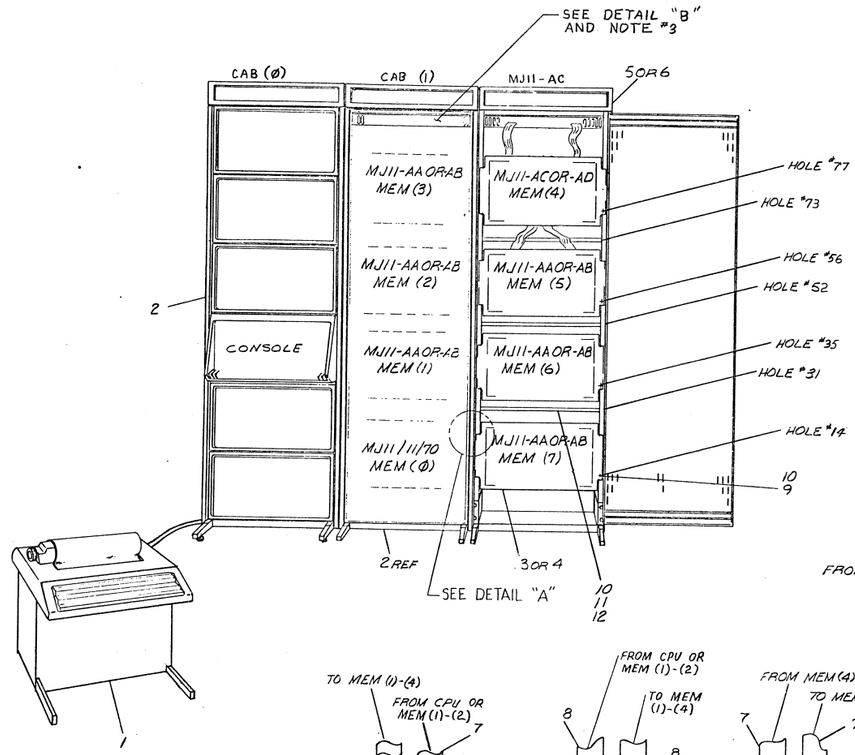

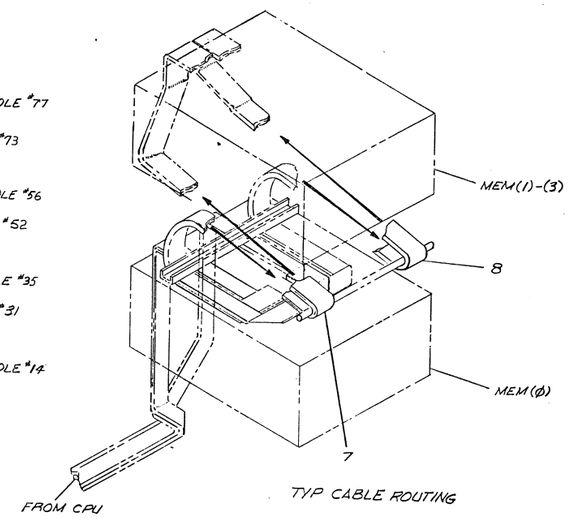

TYP CABLE ROUTING

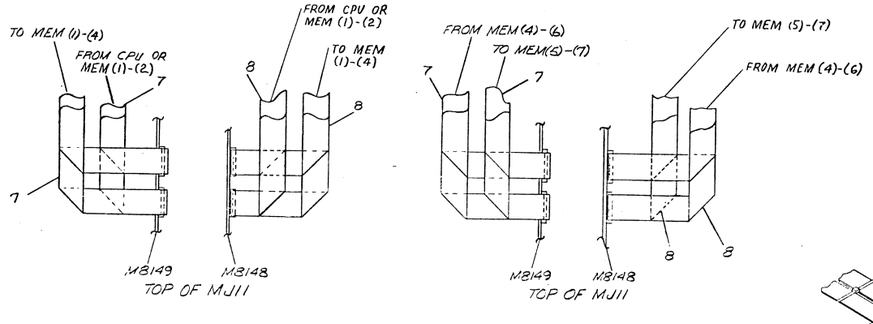

TOP OF MJ11

TOP OF MJ11

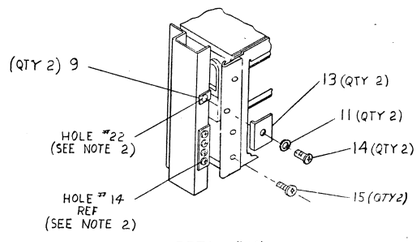

DETAIL "A"
(BOTH SIDES)
QTY SHOWN PER MEM UNIT

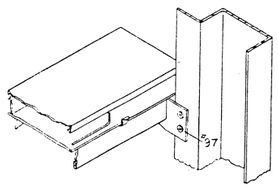

DETAIL "B"
(SEE NOTE 3)

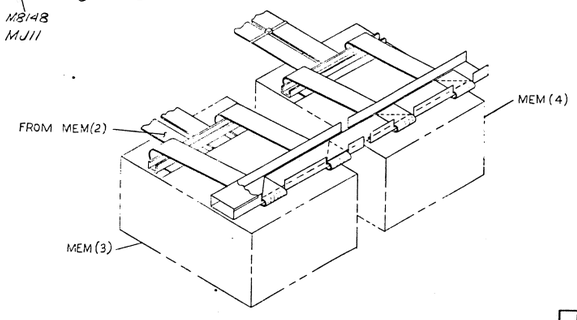

DETAIL "C"
(SEE NOTE 4)

REV	DESCRIPTION	DWG./PART NO.	ITEM NO.
REF	Q.C. CHECK LIST	EN-01862-03	16
A/R	SCR. PHL. TRUSS HD. .032X.25LG BLACK OXIDE	9009715	15
A/R	SCR. PHL HD TRUSS #10-32X.50	9006077-3	14
A/R	BRKT. LOCKING	B-MD-7413664-0-0	13
A/R	CABLE RETAINER	L-FS-12.12.12.75-0	12
A/R	WASHER LOCK #10	9007651	11
A/R	SCR PHL HD TRUSS #10-32	9006075-3	10
A/R	SPEED NUT #10-32	9007186	9
A/R	CABLE INTER CONNECTOR	D-AD-7012861-1-0	8
A/R	CABLES INTERCONNECTOR	D-AD-7012862-0-0	7
A/R	UNIT ASSY MJ11	E-UA-MJ11-AD-0	6
A/R	UNIT ASSY MJ11	E-UA-MJ11-AC-0	5
A/R	UNIT ASSY MJ11	E-UA-MJ11-AB-0	4
A/R	UNIT ASSY MJ11	E-UA-MJ11-AA-0	3
REF	UNIT ASSY 11/70	E-UA-11/70-0-0	2
REF	UNIT ASSY LA36	E-UA-LA36-0-0	1

QUANTITY & VARIATION	
THIRD ANGLE PROJECTION	
REMOVE BURRS AND BREAK SHARP CORNERS	
DO NOT SCALE DWG.	
MATERIAL	-11-
FINISH	

UNLESS OTHERWISE SPECIFIED DIMENSIONS ARE IN INCHES

ANGLES 10' 30'	CLASS OF ACCURACY (CHECK ONE)	NOMINAL DIMENSION RANGE INCHES					
SURFACE QUALITY IN MICROINCHES		OVER 0 TO .3	OVER .3 TO 1.2	OVER 1.2 TO 4.5	OVER 4.5 TO 12.5	OVER 12.5 TO 40.0	OVER 40.0 TO 80.0
✓	MEDIUM ☐	±.004	±.008	±.012	±.016	±.024	±.04
	PREFERRED ☐	±.012	±.016	±.025	±.04	±.063	±.1

DRN. [illegible] FIRST USED ON 11/70
CHKD. [illegible]
ENG. [illegible] 9/1/70
PROJ. ENG. [illegible]
PROD. [illegible]
NEXT HIGHER ASSY B-SD-11/70-0
SCALE
SHEET 1 OF 1

digital

TITLE 11/70 SYSTEM EXPANSION

SIZE E CODE AR NUMBER 11/70-0-1 REV. B

DIST.

REVISIONS

SYM	ZONE NO.	REV.	
A	[illegible]	A	[illegible]
B	[illegible]	B	[illegible]

REV B

FILE CODE E AR 11/70-0-1

ITEM NO.	DRAWING NO./PART NO.	DESCRIPTION	11/70-CA	11/70-CB	11/70-DA	11/70-DB	11/70-EA	11/70-EB	11/70-EC	11/70-ED	11/70-FA	11/70-FB	11/70-FC	11/70-FD	11/70-FE	11/70-FF	11/70-FH	11/70-FJ	11/70-FK	11/70-FL	11/70-FM	11/70-FN	11/70-GA	11/70-GB	11/70-GC	11/70-GD	11/70-HA	11/70-HB	11/70-HC	11/70-HD	11/70-HE	11/70-HF	11/70-HH	11/70-HJ	11/70-HK	11/70-HL	11/70-HM	11/70-HN	11/70-UA	11/70-UB
	A-PL-KB11-B-Ø	16 BIT PROCESSOR	1	1	1	1	1	1	1	1	1	1	1	1	1	1	1	1	1	1	1	1	1	1	1	1	1	1	1	1	1	1	1	1	1	1	1	1	1	1
	D-CS-M93Ø1-YC-1	TERMINATOR BOOT STRAP	1	1	1	1	1	1	1	1	1	1	1	1	1	1	1	1	1	1	1	1	1	1	1	1	1	1	1	1	1	1	1	1	1	1	1	1	1	1
	B-DD-KW11-L-Ø	LINE TIME CLOCK INTERFACE	1	1	1	1	1	1	1	1	1	1	1	1	1	1	1	1	1	1	1	1	1	1	1	1	1	1	1	1	1	1	1	1	1	1	1	1	1	1
	D-UA-DL11-C-Ø	ASYNCRONOUS LINE INTERFACE	1	1	1	1	1	1	1	1	1	1	1	1	1	1	1	1	1	1	1	1	1	1	1	1	1	1	1	1	1	1	1	1	1	1	1	1	1	1
	E-UA-MJ11-AY-Ø	32K 18 BIT MEM. 115V 50/60 HZ	1	-	1	-	1	-	1	-	1	-	1	-	1	-	1	-	1	-	1	-	1	-	1	-	1	-	1	-	1	-	1	-	1	-	1	-	1	-
	E-UA-MJ11-AZ-Ø	32K 18 BIT MEM. 230V 50/60 HZ	-	1	-	1	-	1	-	1	-	1	-	1	-	1	-	1	-	1	-	1	-	1	-	1	-	1	-	1	-	1	-	1	-	1	-	1	-	1
	E-UA-LA36-CA-Ø	DECWRITER 115V	-	-	1	-	1	-	1	-	1	-	1	-	1	-	1	-	1	-	1	-	1	-	1	-	1	-	1	-	1	-	1	-	1	-	1	-	1	-
	E-UA-MJ11-AE-Ø	32K 18 BIT EXPANSION 115V 50/60 HZ	-	-	1	1	1	1	1	1	1	1	1	1	1	1	1	1	1	1	1	1	1	1	1	1	1	1	1	1	1	1	1	1	1	1	1	1	1	-
	E-UA-LA36-CB-Ø	DECWRITER 230V	-	-	-	1	-	1	-	1	-	1	-	1	-	1	-	1	-	1	-	1	-	1	-	1	-	1	-	1	-	1	-	1	-	1	-	1	-	-
	E-UA-BA11-KE-Ø	10.5 EXPANDER BOX 115V	-	-	-	-	1	-	1	-	-	-	-	-	-	-	-	-	-	-	-	-	1	-	1	-	-	-	-	-	-	-	-	-	-	-	-	-	-	-
	D-UA-RK11-DE-Ø	DISK CONTROL 115V 60 HZ	-	-	-	-	1	-	-	-	-	-	-	-	-	-	-	-	-	-	-	1	-	-	-	-	-	-	-	-	-	-	-	-	-	-	-	-	-	-
	D-UA-RKØ5-AA-Ø	25 BIT DEC DISK PACK 115V 60 HZ	-	-	-	-	1	-	-	-	-	-	-	-	-	-	-	-	-	-	-	1	-	-	-	-	-	-	-	-	-	-	-	-	-	-	-	-	-	-
	E-UA-BA11-KF-Ø	10.5 EXPANDER BOX 230V	-	-	-	-	-	1	-	1	-	-	-	-	-	-	-	-	-	-	-	-	1	-	1	-	-	-	-	-	-	-	-	-	-	-	-	-	-	-
	D-UA-RK11-DF-Ø	DISK CONTROL 230V 60 HZ	-	-	-	-	-	1	-	-	-	-	-	-	-	-	-	-	-	-	-	-	1	-	1	-	-	-	-	-	-	-	-	-	-	-	-	-	-	-
	D-UA-RKØ5-AB-Ø	25 BIT DEC DISK PACK 230V 60 HZ	-	-	-	-	-	1	-	-	-	-	-	-	-	-	-	-	-	-	-	-	1	-	-	-	-	-	-	-	-	-	-	-	-	-	-	-	-	-
	D-UA-RK11-DH-Ø	DISK CONTROL 115V 50 HZ	-	-	-	-	-	-	1	-	-	-	-	-	-	-	-	-	-	-	-	-	-	1	-	-	-	-	-	-	-	-	-	-	-	-	-	-	-	-
	D-UA-RKØ5-BA-Ø	25 BIT DEC DISK PACK 115V 50 HZ	-	-	-	-	-	-	1	-	-	-	-	-	-	-	-	-	-	-	-	-	-	1	-	-	-	-	-	-	-	-	-	-	-	-	-	-	-	-
	D-UA-RK11-DJ-Ø	DISK CONTROL 230V 50 HZ	-	-	-	-	-	-	-	1	-	-	-	-	-	-	-	-	-	-	-	-	-	-	1	-	-	-	-	-	-	-	-	-	-	-	-	-	-	-
	D-UA-RKØ5-BB-Ø	DISK CONTROL 230V 50 HZ	-	-	-	-	-	-	-	1	-	-	-	-	-	-	-	-	-	-	-	-	-	-	-	1	-	-	-	-	-	-	-	-	-	-	-	-	-	-
	E-UA-RWPØ4-AA-Ø	MOVING HEAD DISK 60 HZ	-	-	-	-	-	-	-	-	1	1	-	-	-	-	-	-	-	-	-	-	-	-	-	-	1	1	-	-	-	-	-	-	-	-	-	-	-	-
	E-UA-TWU16-EA-Ø	MAG TAPE DRIVE 115V 60 HZ	-	-	-	-	-	-	-	-	1	-	-	-	1	-	-	-	1	-	-	-	1	-	-	-	1	-	-	-	1	-	-	-	1	-	-	-	-	-	-
	E-UA-TWU16-EB-Ø	MAG TAPE DRIVE 230V 60 HZ	-	-	-	-	-	-	-	-	-	1	-	-	-	1	-	-	-	1	-	-	-	1	-	-	-	1	-	-	-	1	-	-	-	1	-	-	-	-	-
	E-UA-RWPØ4-AB-Ø	MOVING HEAD DISK 50 HZ	-	-	-	-	-	-	-	-	-	-	1	1	-	-	-	-	-	-	-	-	-	-	-	-	-	-	1	-	-	-	-	-	-	-	-	-	-	-
	E-UA-TWU16-EC-Ø	MAG TAPE DRIVE 115V 50 HZ	-	-	-	-	-	-	-	-	-	-	1	-	-	-	1	-	-	-	1	-	-	-	1	-	-	-	1	1	-	-	1	-	-	-	1	-	-	-
	E-UA-TWU16-ED-Ø	MAG TAPE DRIVE 230V 50 HZ	-	-	-	-	-	-	-	-	-	-	-	1	-	-	-	1	-	-	-	1	-	-	-	1	-	-	-	-	1	-	-	1	-	-	-	1	-	-
	E-UA-RWPØ4-BA-Ø	MOVING HEAD DISK 60 HZ	-	-	-	-	-	-	-	-	-	-	-	-	1	1	-	-	-	-	-	-	-	-	-	-	-	-	-	1	-	1	-	-	-	-	-	-	-	-
	E-UA-RWPØ4-BB-Ø	MOVING HEAD DISK 50 HZ	-	-	-	-	-	-	-	-	-	-	-	-	-	1	1	-	-	-	-	-	-	-	-	-	-	-	-	-	-	-	1	1	-	-	-	-	-	-
	E-UA-RWPØ4-CA-Ø	MOVING HEAD DISK 60 HZ	-	-	-	-	-	-	-	-	-	-	-	-	-	-	-	1	1	-	-	-	-	-	-	-	-	-	-	-	-	-	-	-	1	1	-	-	-	-
	E-UA-RWPØ4-CB-Ø	MOVING HEAD DISK 50 HZ	-	-	-	-	-	-	-	-	-	-	-	-	-	-	-	-	-	1	1	-	-	-	-	-	-	-	-	-	-	-	-	-	-	-	1	1	-	-
	A-PL-RWSØ4-BA-Ø	FIXED HEAD DISK SYSTEM 115V 60 HZ	-	-	-	-	-	-	-	-	-	-	-	-	-	-	-	-	-	-	-	1	-	-	-	-	1	-	-	-	1	-	-	-	1	-	-	-	-	-
	A-PL-RWSØ4-BB-Ø	FIXED HEAD DISK SYSTEM 230V 60 HZ	-	-	-	-	-	-	-	-	-	-	-	-	-	-	-	-	-	-	-	-	1	-	-	-	1	-	-	-	1	-	-	-	1	-	-	-	-	-
	A-PL-RWSØ4-BC-Ø	FIXED HEAD DISK SYSTEM 115V 50 HZ	-	-	-	-	-	-	-	-	-	-	-	-	-	-	-	-	-	-	-	-	-	1	-	-	-	1	-	-	-	1	-	-	-	1	-	-	-	-
	A-PL-RWSØ4-BD-Ø	FIXED HEAD DISK SYSTEM 230V 50 HZ	-	-	-	-	-	-	-	-	-	-	-	-	-	-	-	-	-	-	-	-	-	-	1	-	-	-	1	-	-	-	1	-	-	-	1	-	-	-

REV. | NUMBER 11/70-0-4 | SIZE CODE C PL | B

REVISIONS: REV. | CHANGE NO. | CHK

FIRST USED ON OPTION/MODEL
D-UA-11/70-0-0

UNLESS OTHERWISE SPECIFIED
UNLESS OTHERWISE SPECIFIED
DIMENSION IN INCHES
TOLERANCES
DECIMALS ± .005 | FRACTIONS ± 1/64 | ANGLES ± 0°30'
FINAL SURFACE QUALITY ✓
REMOVE BURRS AND BREAK SHARP CORNERS

MATERIAL

FINISH

DRN. D. HEALY	DATE 4/7/75	
CHK'D. D. HEALY	DATE 4/7/75	
ENG.	DATE 4/17/75	
PROD. ENG.	DATE 4/18/75	
PROD.	DATE	

NEXT HIGHER ASSY.
NONE

SCALE
SHEET 1 OF 1

digital EQUIPMENT CORPORATION
MAYNARD, MASSACHUSETTS

TITLE
SYSTEM EXPANSION OPTION LIST
(11/70)

SIZE	CODE	NUMBER	REV.
C	PL	11/70-0-4	

DIST.

DEC FORM NO. DRC 110

ITEM NO.	DRAWING NO./PART NO.	DESCRIPTION	11/77-FE	11/77-FF	11/77-FH	11/77-FJ
	A-PL-KB11-B-Ø	16 BIT PROCESSOR	2	2	2	2
	D-CS-M93Ø1-YC-1	TERMINATOR BOOT STRAP	2	2	2	2
	B-DD-KW11-L-Ø	LINE TIME CLOCK INTERFACE	2	2	2	2
	D-UA-DL11-C-Ø	ASYNCRONOUS LINE INTERFACE	2	2	2	2
	E-UA-MJ11-AY-Ø	32K 18 BIT MEM. 115V 50/60 HZ	2	-	2	-
	E-UA-MJ11-AZ-Ø	32K 18 BIT MEM. 230V 50/60 HZ	-	2	-	2
	E-UA-LA36-CA-Ø	DECWRITER 115V	2	-	2	-
	E-UA-MJ11-AE-Ø	32K 18 BIT EXPANSION 115V 50/60 HZ	2	2	2	2
	E-UA-LA36-CB-Ø	DECWRITER 230V	-	2	-	2
	E-UA-TWU16-EA-Ø	MAG TAPE DRIVE 115V 60 HZ	2	-	-	-
	E-UA-TWU16-EB-Ø	MAG TAPE DRIVE 230V 60 HZ	-	2	-	-
	E-UA-RWPØ4-BA-Ø	MOVING HEAD DISK 60 HZ	1	1	-	-
	E-UA-TWU16-EC-Ø	MAG TAPE DRIVE 115V 50 HZ	-	-	2	-
	E_UA-RWPØ4-BB-Ø	MOVING HEAD DISK 50 HZ	-	-	1	1
	E-UA-TWU16-ED-Ø	MAG TAPE DRIVE 230V 50 HZ	-	-	-	2

REVISIONS: REV. | CHANGE NO. | CHK

FIRST USED ON OPTION/MODEL 11/70

UNLESS OTHERWISE SPECIFIED
DIMENSION IN INCHES
TOLERANCES
DECIMALS ± .005 FRACTIONS ± 1/64 ANGLES ± 0°30'
FINAL SURFACE QUALITY ✓
REMOVE BURRS AND BREAK SHARP CORNERS

MATERIAL

FINISH

DRN. D. HEALY	DATE 4/7/75	
CHK'D. D. HEALY	DATE 4/7/75	
ENG.	DATE 4/17/75	
PROJ. ENG.	DATE 4/18/75	
PROD.	DATE 4/18/75	

NEXT HIGHER ASSY. NONE

SCALE

SHEET 1 OF 1

digital EQUIPMENT CORPORATION MAYNARD, MASSACHUSETTS

TITLE SYSTEM EXPANSION OPTION LIST (11/77)

SIZE	CODE	NUMBER	REV.
C	PL	11/77-0-1	

DIST.

DEC FORM NO. DRC 110