digital

11/70

Engineering Drawings

Digital Equipment Corporation

digital EQUIPMENT CORPORATION MAYNARD MASSACHUSETTS

DRAWING DIRECTORY

CUSTOMER PRINT SET INDEX

SEQUENCE	
DRAWING DIRECTORY 11/70 (SHEET 1 ONLY)	B-DD-11/70-0
DRAWING DIRECTORY KB11-B	B-DD-KB11-B
DRAWING DIRECTORY H7420	B-DD-H742Ø-Ø
DRAWING DIRECTORY KW11-L	B-DD-KW11-L
DRAWING DIRECTORY DL11-A	B-DD-DL11-A
DRAWING DIRECTORY MJ11-A	B-DD-MJ11-A
MASTER PARTS LIST KM11	A-ML-KM11-0
TERMINATOR BOOTSTRAP	D-CS-M93Ø1-YC-1
BUS TERMINATOR	D-CS-M93Ø2-Ø-1
TERMINATOR H873	D-CS-H873-Ø-1
UNIT ASSY 11/70	E-UA-11/70-0-0
UNIT ASSY 11/70 (PL)	A-PL-11/70-0-0
PWR. SYSTEM CONFIG.	D-IC-11/70-0-2
HARNESS PWR.	J-IA-7011051 -0-0
I/O CABLE BCØ6R	D-UA-BCØ6R-0-0
ACCESSORY LIST 11/70	A-AL-11/70-0-3
SYSTEM EXPANSION 11/70	E-AR-11/70-0-1
11/70 SYSTEM EXPANSION OPTION LIST	C-PL-11/70-0-4
11/77 SYSTEM EXPANSION OPTION LIST	C-PL-11/77-0-1

THIS IS PRINT SET

UNIT VARIATIONS		PRINT SET
VAR	TITLE	1
11/70-CA	KB11-B,KW11-L,DL11-A	X
	MJ11-AC 115V	
11/70-CB	KB11-B,KW11-L,DL11-A	X
	MJ11-AD 230V	

REVISIONS		
REV	CHG. NO.	DATE
A	11/70-00001	4/75
B	11/70-00002	6/75
C	11/70-00003	8/75
D	11/70 00004	NOV.75

USED ON OPTION/MODEL

SHEET 1 OF 8

DRN.	D. Neary	DATE	3/21/75
CHK'D.	D. Neary	DATE	3/21/75
PROJ ENG.	Rona Ott	DATE	3/28/75
PROD.	Don Weman	DATE	3/24/75
FIELD SERV.	Judy Trotter	DATE	3/24/75

TITLE DRAWING DIRECTORY 11/70

SIZE	CODE	NUMBER	REV
B	DD	11/70-0	D

DIST

DEC 16-(3251-1062-1A-R972

DRB 106

digital EQUIPMENT CORPORATION MAYNARD MASSACHUSETTS

DRAWING DIRECTORY

CUSTOMER PRINT SET INDEX

THIS IS PRINT SET

SEQUENCE		SEQUENCE
DRAWING DIRECTORY KB11-B (SHEET 1 ONLY)	B-DD-KB11-B	
16 BIT PROCESSOR		
FLOW DIAGRAMS	A-PL-KB11-B-Ø	
BLOCK DIAGRAM	D-FD-KB11-B-1	
BLOCK DIAGRAM	D-BD-KB11-B-2	
UNIBUS CABLE & GRANT CHAIN	D-BD-KB11-B-3	
	D-IC-KB11-B-7	
DATA PATHS	D-CS-M813Ø-Ø-1	
GEN REG & ALU. CONTROLS	D-CS-M8131-Ø-1	
IR DECODE	D-CS-M8132-Ø-1	
CONSOLE BOARD	D-CS-5411294-Ø-1	
PROC. DATA & UNIBUS CONTROL	D-CS-M8134-Ø-1	
ROM & ROM CONTROL	D-CS-M8133-Ø-1	
TIMING GENERATOR	D-CS-M8139-Ø-1	
TRAPS & MISC. CONTROL	D-CS-M8135-Ø-1	
UNIBUS & CONSOLE CONTROL	D-CS-M8136-Ø-1	
TIMING DIAGRAM	D-TD-M8136-Ø-7	
FLOW DIAGRAM	D-FD-M8136-Ø-8	
ADDRESS MEMORY BOARD	D-CS-M8143-Ø-1	
CACHE CONTROL BOARD	D-CS-M8142-Ø-1	
CACHE DATA PATHS	D-CS-M8145-Ø-1	
BLOCK DIAGRAM	B-BD-M8145-Ø-7	
DATA MEMORY BOARD	D-CS-M8144-Ø-1	
MEM. MGMT BLOCK DIAGRAM	D-BD-KB11-B-8	
MEM. MGMT REGISTERS	D-BD-KB11-B-4	
CACHE ADDRESS TIMING	D-TD-KB11-B-10	
INT. REG. CYCLE TIMING	D-TD-KB11-B-9	
MEM. MGMT TRAP TIMING	B-BD-KB11-B-5	
SYSTEM ADDRESS PATHS	D-CS-M8137-Ø-1	
SYSTEM DESCRIPTOR AND CONSOLE CABLES	D-CS-M814Ø-Ø-1	
SYSTEM STATUS REGISTERS	D-CS-M8138-Ø-1	
UNIBUS MAP (M8141) B.D.	B-BD-KB11-B-6	
UNIBUS MAP	D-CS-M8141-Ø-1	
PROCESSOR BACK PLANE	E-AD-7010329-0-0	
AWT REV STATUS	A-WT-7010329-0	

UNIT VARIATIONS

VAR	TITLE	PRINT SET 1
KB11-B	16 BIT PROCESSOR	X

REVISIONS		
DATE	CHG. NO.	REV
5-75	KB11B-3	A
P.D.	KB11B-4	B

DEC 16-(325)-1062-1A-R972

DRB 106

USED ON OPTION/MODEL	
11/70	

SHEET 1 OF 7

DRN. G. MARINI	DATE 2/7/75	TITLE 16 BIT PROCESSOR	
CHK'D. D. HEALY	DATE 2/10/75		
PROJ ENG.	DATE 3/28/75		
PROD.	DATE 3/26/75	SIZE B	CODE DD	NUMBER KB11-B	REV B
FIELD SERV.	DATE 3/26/75	DIST	

digital EQUIPMENT CORPORATION MAYNARD MASSACHUSETTS

DRAWING DIRECTORY

CUSTOMER PRINT SET INDEX

THIS IS PRINT SET

	SEQUENCE
DRAWING DIRECTORY	B-DD-H742Ø-Ø
WIRING DIAGRAM	D-CS-H742Ø-Ø-Ø
POWER LINE MONITOR	D-CS-5411086-0-1
H742Ø POWER SUPPLY	E-UA-H742Ø-Ø-Ø
H7420 POWER SUPPLY (P.L.)	A-PL-H742Ø-Ø-Ø

UNIT VARIATIONS

VAR	TITLE	PRINT SET 1
H742ØE	H742Ø POWER SUPPLY (120V)	
H742ØF	H742Ø POWER SUPPLY (240V)	
H7420A	H742Ø POWER SUPPLY (120V)	
H7420B	H742Ø POWER SUPPLY (240V)	

REVISIONS		
DATE	CHG. NO.	REV
6-75	H7420 -1	A
7-75	H7420 - 2	B

USED ON OPTION/MODEL

SHEET 1 OF 3

DRN. R.E.Thellen	DATE 1/29/75	TITLE H742Ø POWER SUPPLY
CHK'D. P.Cappabianco	DATE 2/3/75	
PROJ ENG. R.A. Wolf	DATE 2/3/75	
PROD. J.Boerrather	DATE 2/3/75	SIZE B · CODE DD · NUMBER H742Ø-Ø · REV B
FIELD SERV. W.J.Kennedy	DATE 2-19-75	DIST

DEC 16-13251-1062-1A-R972

DRB 106

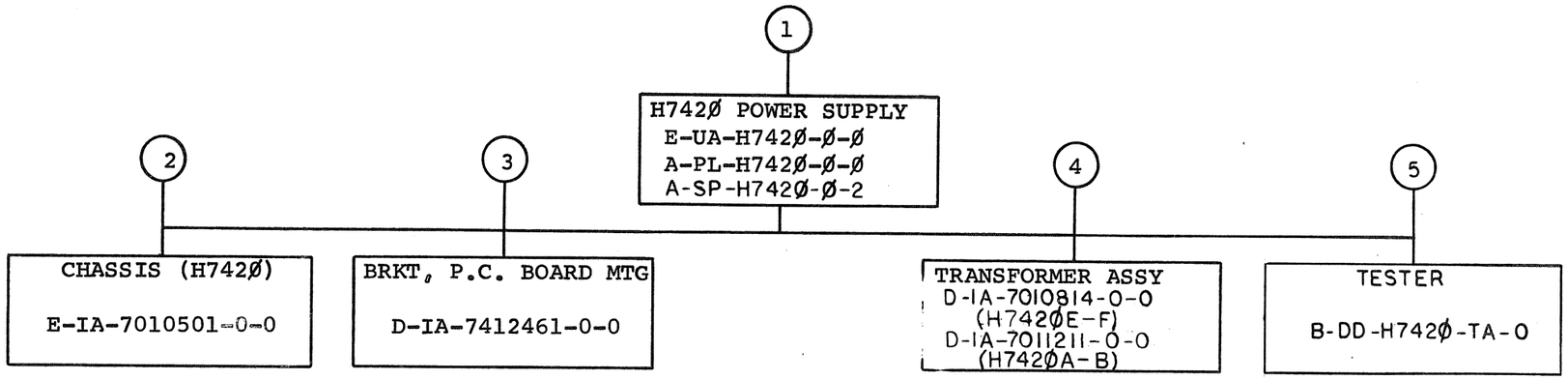

TITLE		SIZE	CODE	NUMBER	REV
H742Ø POWER SUPPLY	SHEET 2 OF 3	B	DD	H742Ø-Ø	B

DRB 107
DEC 16—(325)—1062—3—N871

ELECTRICAL

CUSTOMER PRINT SET 1	MFG. SET	FIND NO.	DRAWING NO.	REV	NO OF SHT	DESCRIPTION	OPTION NO./FILE DATE
X		1	B-DD-H742Ø-Ø	B	3	DRAWING DIRECTORY	
X			D-CS-H742Ø-Ø-1	A	2	WIRING DIAGRAM	
X			D-CS-5411086-0-1	#	4	POWER LINE MONITOR	
			A-SP-H742Ø-Ø-2	#	16	ENGINEERING SPEC.	
		5	B-DD-H742Ø-TA		1	TESTER DRAWING DIRECTORY	
			B-CS-H742Ø-TA-1	A	1	TESTER WIRING DIAGRAM	
			A-UA-H742Ø-TA-Ø		1	H7420 TESTER	
			A-PL-H742Ø-TA-Ø		2	TESTER PARTS LIST	
			A-SP-H742Ø-Ø-3		2	TEST PROCEDURE	

MECHANICAL

CUSTOMER PRINT SET 1	MFG SET	FIND NO.	DRAWING NO.	REV	NO OF SHT	DESCRIPTION	OPTION NO./FILE DATE
X		1	E-UA-H742Ø-Ø-Ø	B	4	H742Ø POWER SUPPLY	
X			A-PL-H742Ø-Ø-Ø	B	2	H742Ø POWER SUPPLY	
			D-MD-7412459-0-0	A	1	COVER, CONTROL BOX	
			C-IA-7413125-0-0		1	PLATE, ADAPTER (H742Ø)	
			C-IA-7010730-0-0		1	POWER INDICATOR ASSY	
			D-IA-7010729-0-0	A	1	CABLE, REGULATOR BOARD	
			D-IA-7010728-0-0		1	CABLE, FAN POWER	
			C-IA-7010727-0-0		1	POWER CORD, ASSEMBLY	
			A-DC-7413184-0-0		1	POWER SUPPLY DECAL (H742Ø)	
			A-DC-7413186-0-0		1	POWER SUPPLY DECAL (H7420E)	
			A-DC-7413185-0-0		1	POWER SUPPLY DECAL (H742ØF)	
			A-DC-7413966-0-0		1	POWER SUPPLY DECAL (H7420A)	
			A-DC-7413967-0-0		1	POWER SUPPLY DECAL (H7420B)	
		2	E-IA-7010501-0-0		1	CHASSIS (H742Ø)	
			E-IA-7412948-0-0		2	PLATE, BASE	
			E-IA-7412949-0-0		2	HOUSING, REGULATOR	
		3	D-IA-7412461-0-0		1	BRKT, P.C. BOARD MTG.	
			B-SS-7412461-0-1		1	BRKT, P.C. BOARD MTG. (SS)	
		4	D-IA-7011211-0-0		2	TRANSFORMER ASSY (H7420A&B)	
			D-IA-7010814-0-0	A	2	TRANSFORMER ASSEMBLY (H7420 E&F)	
			C-IA-7010813-0-0		1	CAP/VAR ASSEMBLY	

CUSTOMER PRINT SET CODES
X = PRINT OF DOCUMENT INCLUDED IN PRINT SET
C = INCLUDES ALL PRINTS INDICATED ON DOCUMENT
S = CONFIDENTIAL AUTHORIZED SIGNATURE REQUIRED

TITLE	SHEET	SIZE	CODE	NUMBER	REV
H742Ø POWER SUPPLY	3 OF 3	B	DD	H742Ø-Ø	B

DRB 108
DEC 16-(325)-1062-2B-R972

SIZE	CODE	NUMBER	REV.
D	CS	H7420-0-1	1

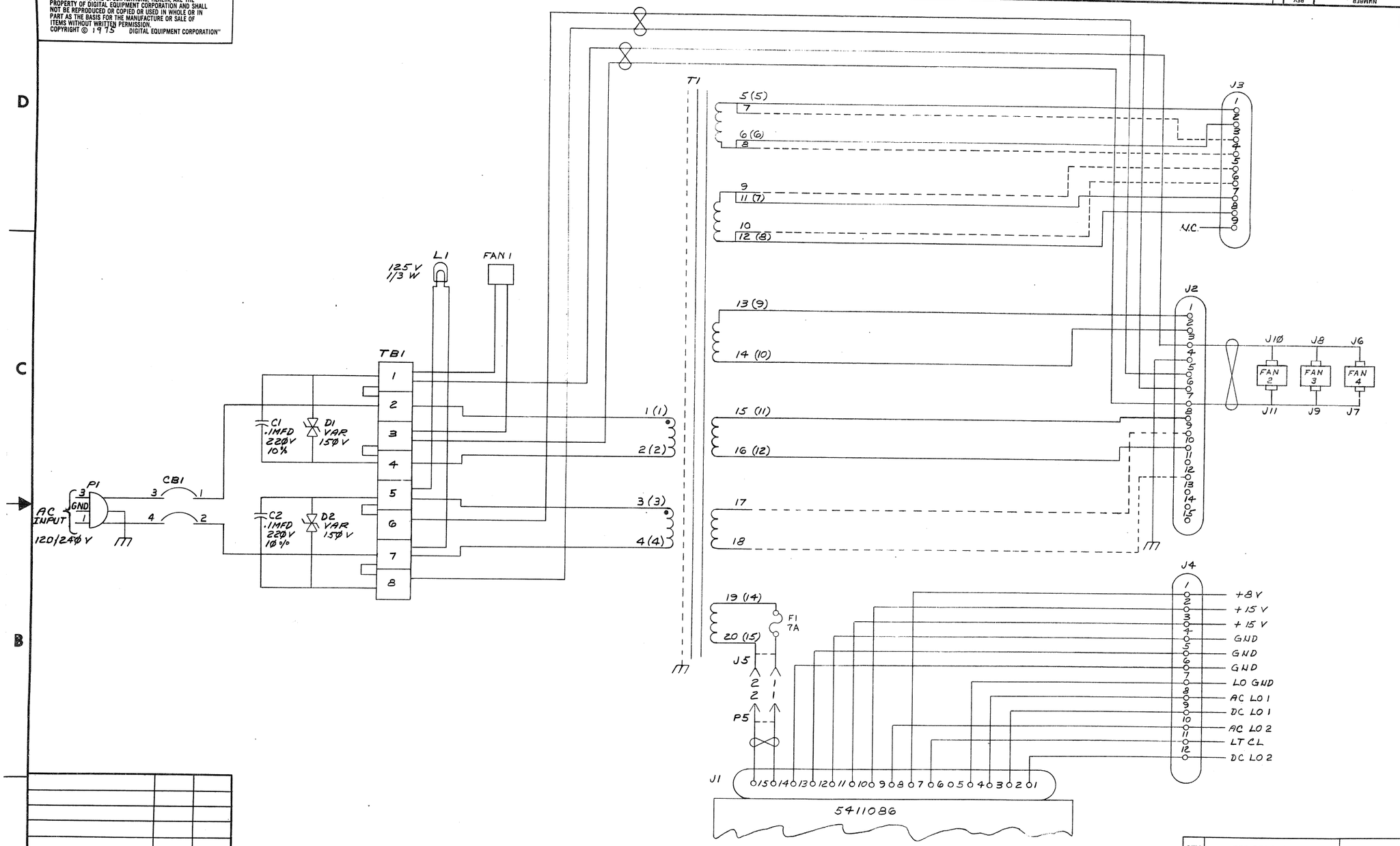

NOTES:

1. DOTTED LINES INDICATED WINDINGS OMITTED IN E AND F VERSIONS.

2.

VERSION	TB1 JUMPERS	CB1
A	2 + 6, 4 + 8	20 A
B	4 + 6	15
E	2 + 6, 4 + 8	20
F	4 + 6	15

3. NUMBERS IN ( ) INDICATE XFORMER LEAD NUMBERS ON E & F VERSION.

~~4. ○ RING TERMINAL CONNECTIONS.~~
~~□ FAST TAB CONNECTIONS.~~

IC TYPE	GND	+5V

GND AND 5V ARE USUALLY PIN 7 AND 14 RESPECTIVELY EXCEPTIONS ARE STATED ABOVE

IC PIN LOCATIONS

DEC FORM NO. DRD 135.8

QTY	REF. DESIGNATION	DESCRIPTION	PART NO.	ITEM NO.

PARTS LIST

[redacted]

FIRST USED ON OPTION MODEL
H7420

REV.	CHANGE NO.	CHK	
A	H7420-00001	JD	W Fisher 6-18-75 F. LOYA a. Bason 6-20-75

REVISIONS

DEC NO.	EIA NO.	DEC NO.	EIA NO.

SEMICONDUCTOR CONVERSION CHART

		DATE
DRN.	M Poirier	1-17-75
CHK'D.	P Lappahanca	4-22-75
ENG.	Robert J. Wolf	2/3/75
PROJ. ENG.	Robert J. Wolf	2/3/75
PROD.	J Bornstein	2/3/75

NEXT HIGHER ASSY

SCALE

SHEET 1 OF 1

digital

TITLE
WIRING DIAGRAM

SIZE	CODE	NUMBER	REV.
D	CS	H7420-0-1	A

DIST.

SIZE	CODE	NUMBER	REV.
D	CS	H7420-0-1	A

NOTES:

1. R45, R46, C4, C9, & C11 ARE NOT USED ON BASIC 5411086 BUT ARE RESERVED FOR PLANNED FUTURE MODULE VARIATIONS.
2. * * TOTAL +15V AND +8V CURRENT NOT TO EXCEED 40 AMPERES.
3. W1 (TEST JUMPER) MAYBE TEMPORARILY REMOVED WHILE TROUBLE-SHOOTING TO DETERMINE IF LOSS OF 15V IS DUE TO CROW-BAR CIRCUITRY. BUT MUST BE IN THE BOARD FOR NORMAL OPERATION.

~~4. NON-ITEMIZED PARTS SUPPLIED WITH D12.~~

4 YA VERSION DOES NOT CONTAIN +15VDC REG.

5. A) FOR STANDARD VERSION USE SHEETS 1, 2, 3, & 4 OF THIS DWG.
   B) FOR YA VERSION USE SHEETS 1, 2, & 3 OF THIS DWG.

SEE COMPONENT CHART FOR YA VERSION REF DESIGNATIONS

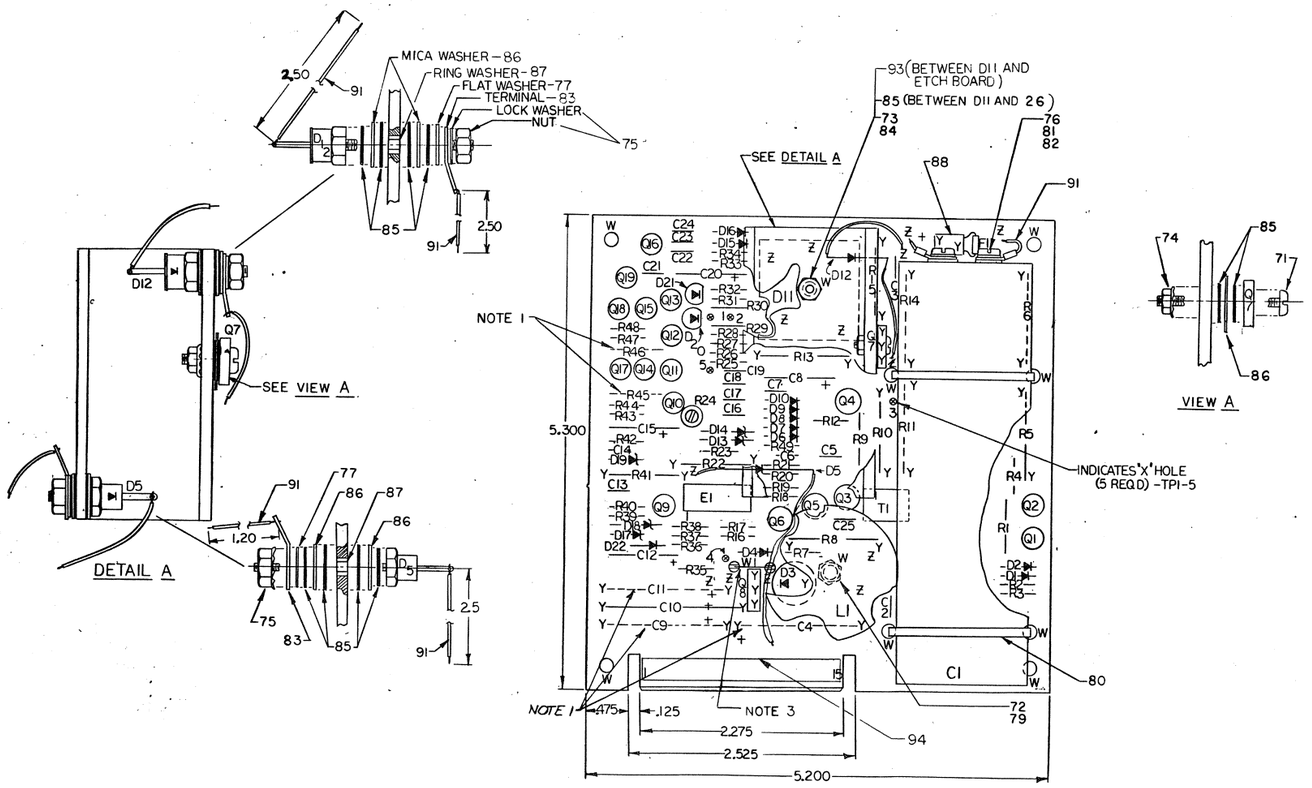

COMPONENT CHART - YA VERSION		
3	C19, C22, C23	7
1	C8	8
1	D19	14
7	D6, D7, D8, D9, D15, D16, D22	17
1	D10	18
1	R49	30
2	R44, R48	40
1	R28	50
4	Q3, Q5, Q10, Q19	63
4	Q11, Q12, Q13, Q16	66
QTY	REF. DESIGNATION	ITEM

IC TYPE	GND	+5V
GND AND 5V ARE USUALLY PIN 7 AND 14 RESPECTIVELY EXCEPTIONS ARE STATED ABOVE		
IC PIN LOCATIONS		

REV.	DATE	BY	CHANGE NO.
H	6/8/75	V. BOAEN	5411086-00004
G	4/9/75	V. BOAEN	5411086-00003
F	5/19/75	V. BOAEN	5411086-00002
E	3/4/75	V. BOAEN	5411086-00001
D	2-6-75		ORIGINATED
C			
B			

REVISIONS

DEC NO.	EIA NO.	DEC NO.	EIA NO.

SEMICONDUCTOR CONVERSION CHART

REF	REF				
REF	REF		X-Y COORDINATE HOLE LOCATION	K-CO-5411Ø86-Ø-4	1
REF	REF		ASSY/DRILLING HOLE LAYOUT	D-AH-5411Ø86-Ø-5	2
REF	REF		MODULE ECO HISTORY	B-MH-5411Ø86-Ø-6	3
1	1		ETCHED CIRCUIT BOARD	5011085	4
0	1	C2	CAPACITOR 56PF 100V 5%	1000012	5
4	4	C16, C17, C18, C21	CAPACITOR 33ØPF 100V 5%	1000023	6
3	5	C3, C13, C19, C22, C23	CAPACITOR .01uf 100V 20%	1001610-01	7
1	3	C8, C12, C15	CAPACITOR 2.2uf 35V 10%	1002431	8
2	2	C6, C25	CAPACITOR 18PF 100V 5%	1002608	9
1	1	C2Ø	CAPACITOR 1.5uf 35V 10%	1009725	10
4	4	C5, C7, C14, C24	CAPACITOR .22uf 50V -20% +80%	1010274-01	11
0	1	C1Ø	CAPACITOR 500uf 25V -10% +75%	1010509-01	12
1	1	C1	CAPACITOR 8400uf 50V -10% +75%	1010851	13
1	2	D2, D19	DIODE IN748A	1100122	14
0	1	D5	DIODE IN297ØB	1100134	15
0	1	D3	DIODE MR1Ø33B	1103341	16
7	8	D1, D6, D7, D8, D9, D15, D16, D22	DIODE D672	1105275	17
1	2	D1Ø, D17	DIODE IN4744	1105648	18
0	1	D4	DIODE IN4ØØ4	1105796	19
0	1	D12	DIODE IN388Ø	1109440	20
0	1	D18	DIODE IN967A	1110068	21
2	2	D2Ø, D21	DIODE MV5Ø54-1 (LIGHT EMITTING)	1110324	22
1	1	D11	DIODE BRIDGE 200V 2ØA	1110714	23
2	2	D13, D14	DIODE ITTZ429	1110925	24
0	1	F1	FUSE PICO 5A	1205747	25
0	1		HEAT SINK	1211986	26
0	1	R23	RESISTOR 47 1/4W 5%	1300202	27
0	2	R7, R4Ø	RESISTOR 100 1/4W 5%	1300229	28
0	1	R41	RESISTOR 100 1W 5%	1300232	29
1	3	R4, R12, R49	RESISTOR 220 1/4W 5%	1300271	30
0	1	R14	RESISTOR 220 2W 10%	1300278	31
0	1	R11	RESISTOR 680 2W 5%	1300348	32
2	2	R18, R2Ø	RESISTOR 1K 1/4W 5%	1300365	33
0	1	R1	RESISTOR 1.5K 1/2W 5%	1300394	34
0	1	R1Ø	RESISTOR 2.2K 1W 10%	1300420	35
1	1	R15,	RESISTOR 3.3K 1W 10%	1300437	36
0	1	R3	RESISTOR 3.3K 1/4W 5%	1300439	37
2	2	R43, R47	RESISTOR 10K 1/4W 5%	1300479	38
0	1	R37	RESISTOR 10 1/4W 5%	1301317	39
2	3	R2, R44, R48	RESISTOR 750 1/4W 5%	1301401	40
0	1	R38	RESISTOR 680 1/4W 5%	1301424	41
0	1	R16	RESISTOR 22K 1/4W 5%	1301808	42
1	1	R13	RESISTOR 1K 2W 5%	1301952	43
0	1	R9	RESISTOR 27 1/2W 5%	1302253	44
2	2	R19, R21	RESISTOR 30K 1/4W 5%	1302394	45
0	1	R36	RESISTOR 511 1/4W 1%	1302411	46
0	1	R39	RESISTOR 909 1/4W 1%	1302685	47
1	1	R25	RESISTOR 3.16K 1/4W 1%	1303045	48
1	1	R8	RESISTOR 470 2W 5%	1303062	49
1	2	R17, R28	RESISTOR 1K 1/4W 1%	1303114	50
1	1	R31	RESISTOR 2.61K 1/4W 1%	1303303	51
0	1	R42	RESISTOR 10K 1/4W 1%	1303312	52
2	2	R33, R34	RESISTOR 5.11K 1/4W 1%	1304854	53
1	1	R3Ø	RESISTOR 9.09K 1/4W 1%	1304855	54
YA	QTY	REF. DESIGNATION	DESCRIPTION	PART NO.	ITEM NO.

PARTS LIST

FIRST USED ON OPTION MODEL

ETCH BOARD REV. D

DRN. J. Vincent	DATE 10-9-74	digital
CHK'D.	DATE	TITLE PWR. LINE MONITOR/15V REG.
ENG. Terrell Boaen	DATE 10/11/74	
PROJ. ENG. Terrell Boaen	DATE 10/17/74	
PROD. R.K. Peterson	DATE 11/4/74	
NEXT HIGHER ASSY		
SCALE —		SIZE D CODE CS NUMBER 5411086-0-1 REV. H
SHEET 1 OF 4		DIST.

DEC FORM NO. DRD 135.0

NOTES:

YA	QTY	REF DESIGNATION	DESCRIPTION	PART NO.	ITEM NO.
1	1	R29	RESISTOR 3.48K 1/4W 1%	1305114	55
1	1	R26	RESISTOR 5.62K 1/4W 1%	1305128	56
1	1	R27	RESISTOR 4.99K 1/4W 1%	1305324	57
0	1	R35	RESISTOR 24.9K 1/4W 1%	1305405	58
0	1	R24	RESISTOR 200 20% 62PR	1309150-10	59
1	1	R32	RESISTOR 18.2K 1/4W 1%	1309412	60
0	2	R5,R6	RESISTOR .2 5W 5% WW	1309884	61
0	1	Q7	TRANSISTOR MJE3055	1510555	62
4	6	Q2,Q3,Q5,Q6,Q10,Q19	TRANSISTOR MPSA05	1510705	63
0	2	Q4,Q9	TRANSISTOR MPS A55	1510706	64
0	1	Q8	TRANSISTOR 2N 4441	1505867	65
4	5	Q1,Q11,Q12,Q13,Q16	TRANSISTOR 2N 4250	1509142	66
4	4	Q14,Q15,Q17,Q18	TRANSISTOR 2N 5433	1511686	67
0	1	L1	INDUCTOR, 500 uh	1611868	68
1	1	T1	TRANSFORMER	1612026	69
0	1	E1	I.C. DEC 723	1910415	70
0	1		SCREW, PHM #4-40 X 7/16 LG.	9006012-1	71
0	1		SCREW, PHM #6-32 X 1/4 LG.	9006020-1	72
0	1		SCREW, PHM #6-32 X 7/8 LG.	9006027-1	73
0	1		KEP NUT #4-40	9006557	74
0	2		KEP NUT #10-32	9006565	75
2	2		WASHER, LITLKWR #10	9006635	76
0	2		WASHER, FLAT	9006668	77
0	2	(W1)	SPLIT LUG	9006851	78
0	1		SPACER, 1/4AF X 1/2	9006844	79
4	4		CABLE TIE	9007880	80
2	2		TERMINAL	9007[illegible]	81
2	2		SCREW, PHM #10-32 X 1/4 LG.	9008007-1	82
0	2		TERMINAL	9008150	83
0	1		KEP NUT #6-32	9008185	84
0	A/R		COMPOUND, THERMAL JOINT	9008268	85
0	5		WASHER, MICA	9008424	86
0	2		WASHER, RING	9008440	87
0	1		FUSE HOLDER	9009141	88
1	1	R22	RESISTOR, 330, 2W 10%	1309080	89
0	1	W1	JUMPER	9009185	90
2	12		WIRE #18 STRANDED BLK	9107960-0-0	91
REF	REF		MODULE TEST PROCEDURE	A-SP-~~1145-TA-2~~	92
1	1		WASHER, RING	9006713	93
1	1		.010 INCH SHIM	7413721-0-0	94
REF	REF		ENG. SPEC-AND TEST PROC.	A-SP-5411086-0-3	95

PARTS LIST

FIRST USED ON OPTION MODEL

ETCH BOARD REV D

IC TYPE	GND	+ 5V

GND AND 5V ARE USUALLY PIN 7 AND 14 RESPECTIVELY EXCEPTIONS ARE STATED ABOVE

IC PIN LOCATIONS

DEC NO.	EIA NO.	DEC NO.	EIA NO.

SEMICONDUCTOR CONVERSION CHART

CHANGE NO. REV REVISIONS CHK

DRN. J. Vincent DATE 10-9-74
CHK'D. [illegible] DATE [illegible]
ENG. Newell Brown DATE 10/17/74
PROJ. ENG. Newell Brown DATE 10/17/74
PROD. R.K. Peterson DATE 10/4/74
NEXT HIGHER ASSY
SCALE —
SHEET 2 OF 4

digital EQUIPMENT CORPORATION MAYNARD MASSACHUSETTS

TITLE PWR. LINE MONITOR/15V REG.

SIZE D CODE CS NUMBER 5411086-0-1 REV. H

DIST.

D CS 5411086-0-1 H 2

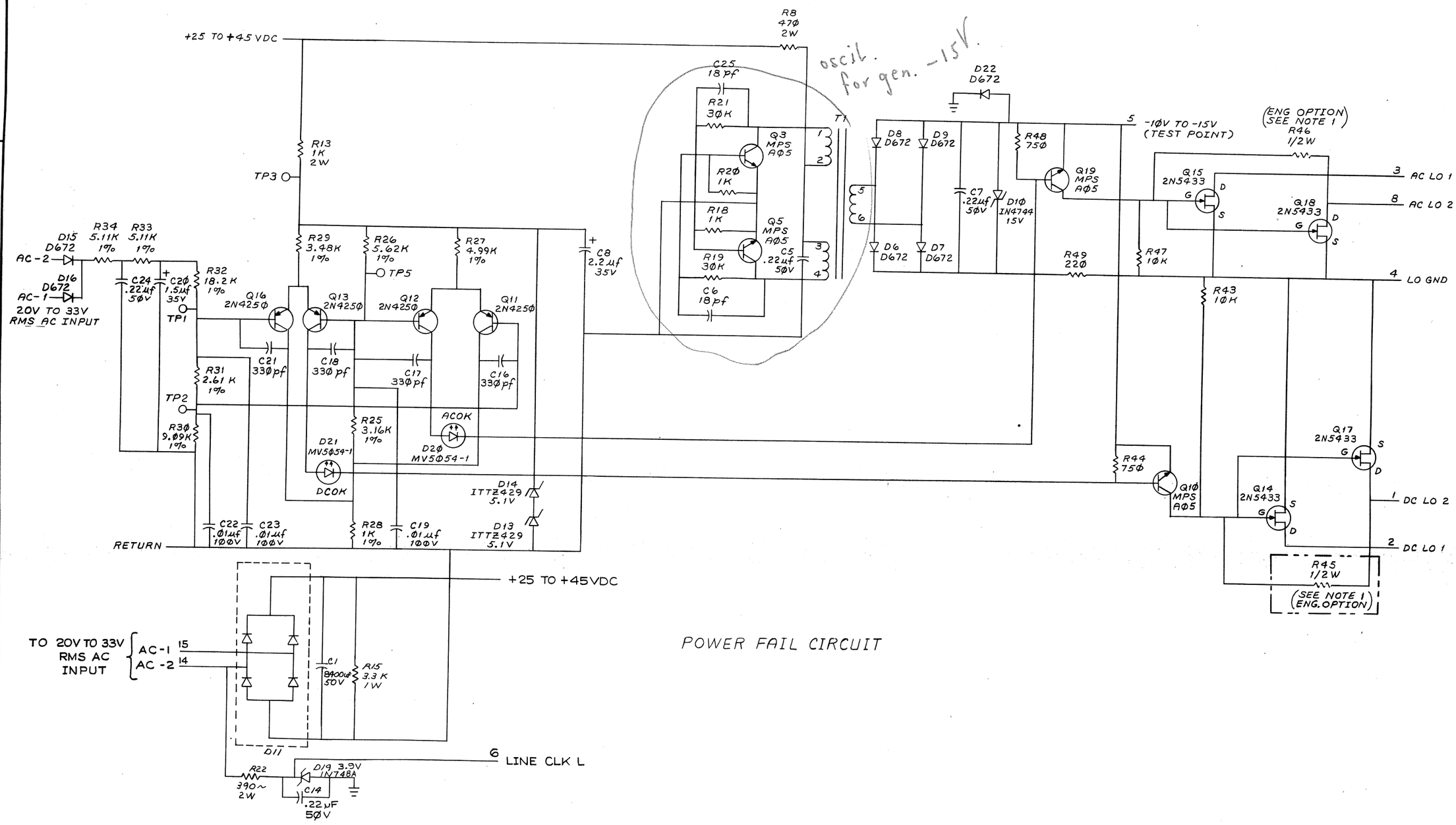

REVISIONS		
CHK	CHANGE NO.	REV.

TITLE	SIZE	CODE	NUMBER	REV.
PWR. LINE MONITOR/15V REG.	D	CS	5411086-0-1	H
SCALE —	SHEET 3 OF 4	DIST.		

DEC FORM NO. ORD 138

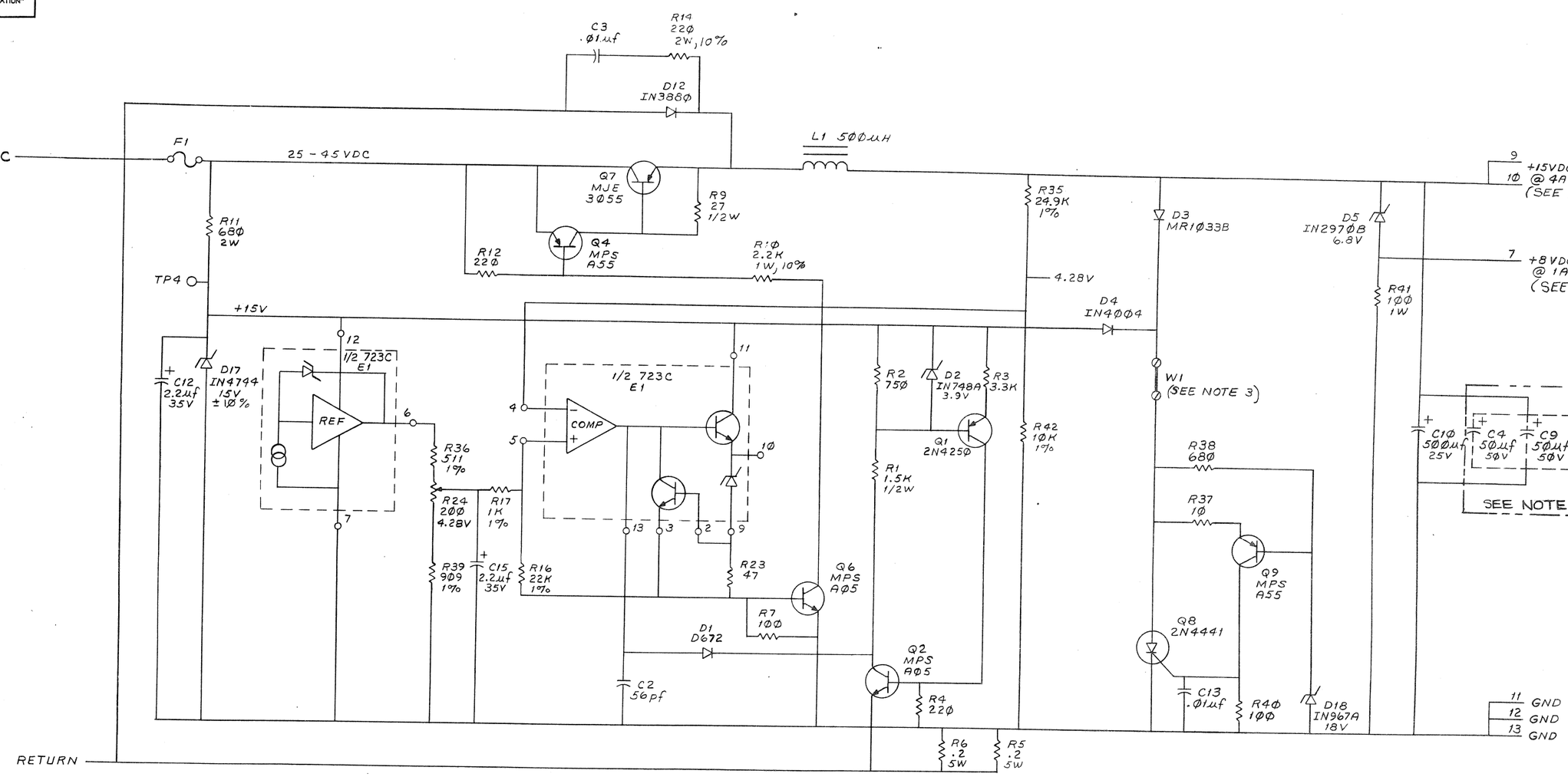

15V REGULATOR
(SEE NOTE #4)

REVISIONS		
CHK	CHANGE NO.	REV.

TITLE	SIZE	CODE	NUMBER	REV.
PWR. LINE MONITOR/15V REG.	D	CS	5411086-0-1	H
SCALE —//—	SHEET 4 OF 4	DIST.		

DEC FORM NO. DRD 138

DO NOT SCALE DRAWING

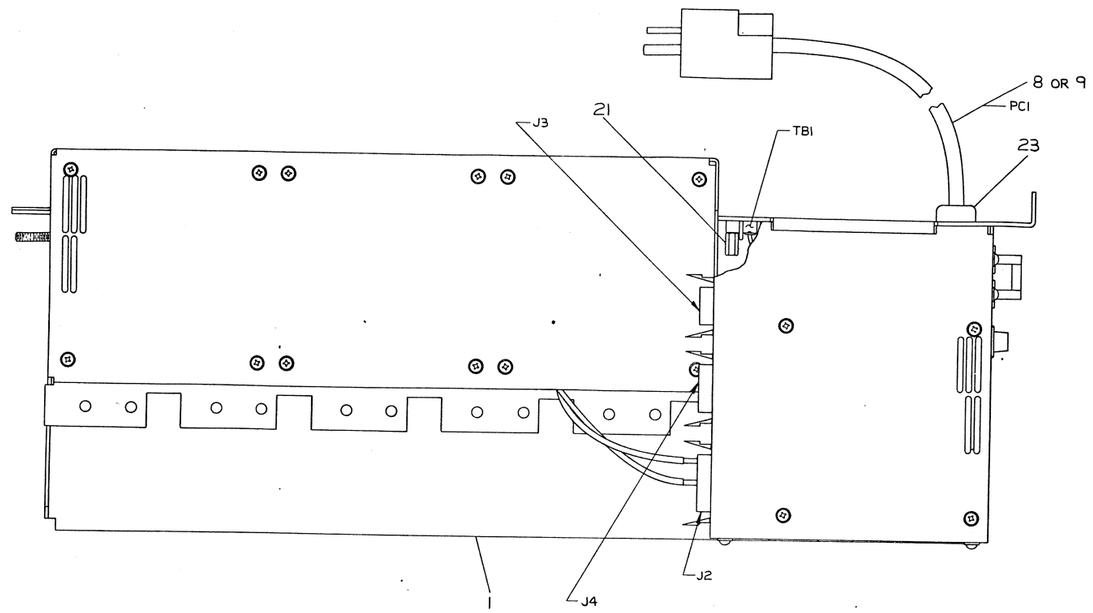

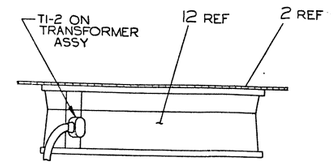

SECTION D-D
SCALE: NONE

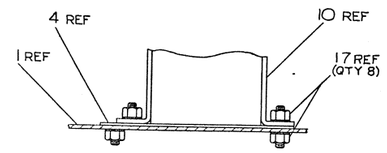

SECTION C-C
SCALE: NONE
SEE NOTE 6

NOTES:

1. AFTER TERMINAL BLOCK (PART OF TRANSFORMER ASSEMBLY) IS MOUNTED TO CHASSIS, CAPACITOR AND VARISTOR SHOULD BE BENT FORWARD TO ALLOW CLEARANCE FOR COVER.
2. REV. D AND EARLIER TRANSFORMERS DO NOT HAVE THIS WIRE. H7420 E+F ONLY.
3. FILLER PANELS (D-IA-7413405-0-0) MAY BE USED IN UNFILLED REGULATOR SLOTS (REF).
4. CABLE TIE MOUNTS TO BE MOUNTED AFTER TRANSFORMER ASSEMBLY IS INSTALLED.
5. H7420 A+B ONLY.
6. H7420 E+F ONLY.

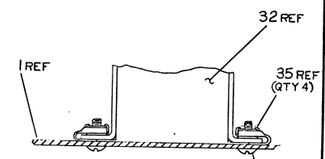

SECTION C-C
SCALE: NONE
SEE NOTE 5

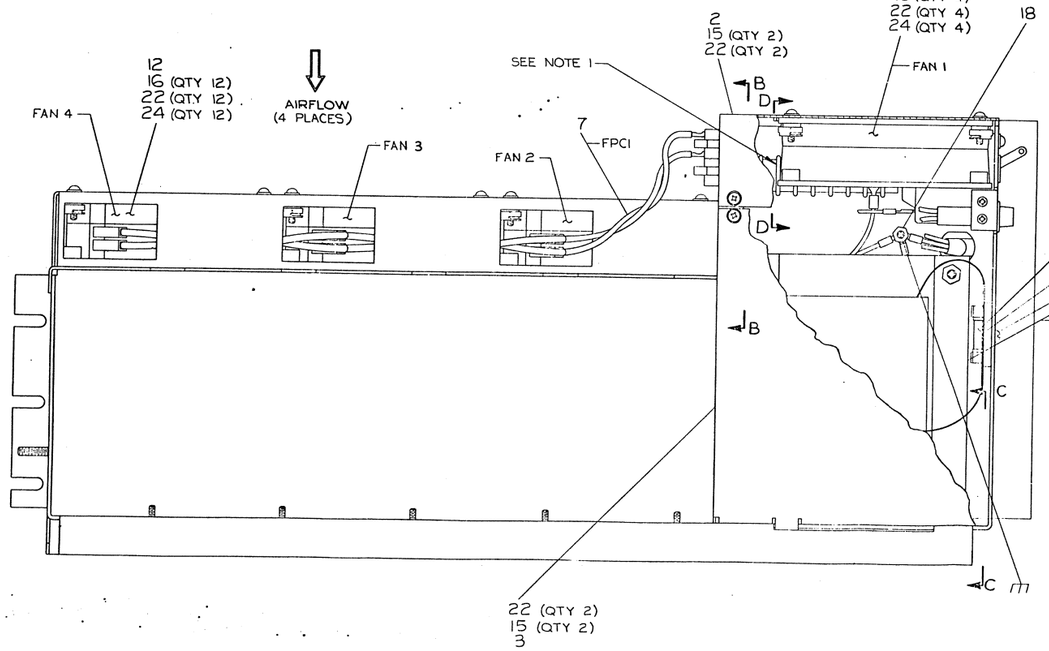

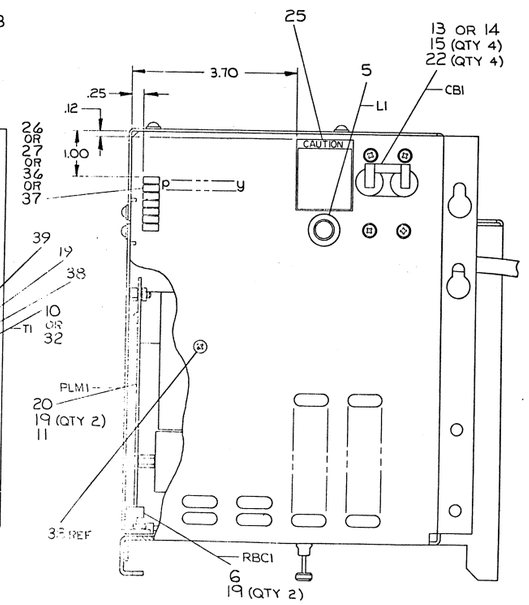

FOR PARTS LIST REFER TO A-PL-H7420-0-0

QTY.	DESCRIPTION	PART NO.	ITEM NO.
	PARTS LIST		

FIRST USED ON OPTION/MODEL: H7420

DIMENSIONAL TOLERANCE: DIMENSIONS ARE MILLIMETERS OR INCHES UNLESS OTHERWISE SPECIFIED

MILLIMETERS	INCHES	ANGLES
X.XX ±0.10	XXX ±.005	±0° 30'
X.X ±0.5	XX ±.02	
X ±1 &	X ±.1	

THIRD ANGLE PROJECTION

REMOVE BURRS AND BREAK SHARP CORNERS/SURFACE QUALITY ✓

MATERIAL: SEE PARTS LIST

FINISH: —/—

DRN. H.C. DATE 1-10-77
CHK'D. R.C. DATE 2/21/77
ENG. " DATE
PROJ. ENG. " DATE
PROD. DATE
NEXT HIGHER ASSY. B-DD-H7420-0
SCALE 1/1
SHEET 1 OF 1

digital

TITLE: H7420 POWER SUPPLY

SIZE	CODE	NUMBER	REV.
E	UA	H7420-0-0	B

DIST.

REVISIONS: REV. | CHANGE NO. | CHK.

A-PL-H7420-0-0 REV. B

DO NOT SCALE DRAWING

WIRE TABLE

ITEM NO	DESCRIPTION AWG	COLOR	FROM CONNECTION	TO CONNECTION	REMARKS
10			T1-J5	RBC1-P5	
	14	GRN	T1-1		SEE NOTE 2
		BLK	T1-2	FAN1-1 & 2	
	14	WHT	T1-3	CB1-1	
	14	GRN	T1-4		
10	14	BLK	T1-5	CB1-2	
5	22	BLK	L1-1	TB1-5	
5	22	BLK	L1-2	TB1-7	
7	18	RED	FPC1-J6	FAN 4-1	
		WHT	FPC1-J7	FAN 4-2	
		RED	FPC1-J8	FAN 3-1	
		WHT	FPC1-J9	FAN 3-2	
		RED	FPC1-J10	FAN 2-1	
		WHT	FPC1-J11	FAN 2-2	
		RED	FPC1-1	J2-3	
7	18	WHT	FPC1-2	J2-7	
8/9	14	BLK	PC1-1	CB1-4	
8/9	14	GRN	PC1-2		
8/9	14	WHT	PC1-3	CB1-3	
11			PLM1	RBC1-J1	

JUMPER TABLE

ITEM NO	DESCRIPTION AWG	COLOR	FROM CONNECTION	WITH	TO CONNECTION	WITH	PRECUT LENGTH	VARIATION
29	14	BLK	TB1-2	ITEM 28	TB1-6	ITEM 28	3.0	H7420E & A
29	14	BLK	TB1-4	ITEM 28	TB1-8	ITEM 28	3.0	
29	14	BLK	TB1-4	ITEM 28	TB1-6	ITEM 28	3.0	H7420F & B

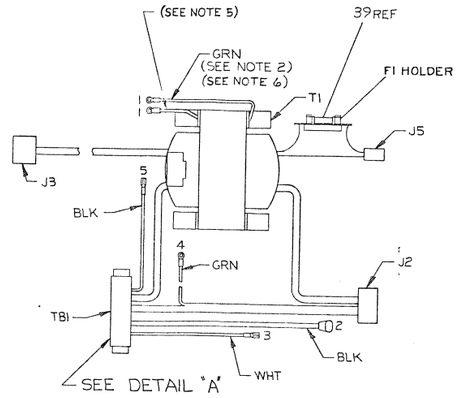

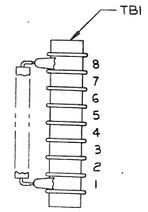

DETAIL "A"
SCALE: NONE

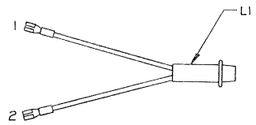

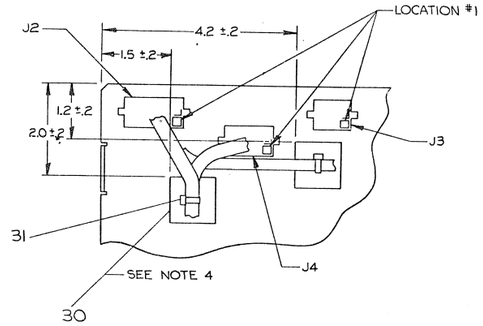

SECTION B-B
SCALE: NONE

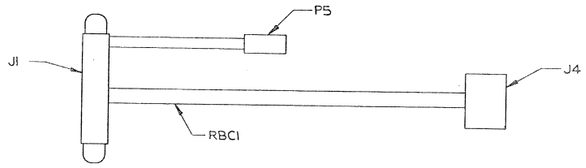

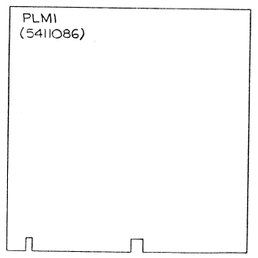

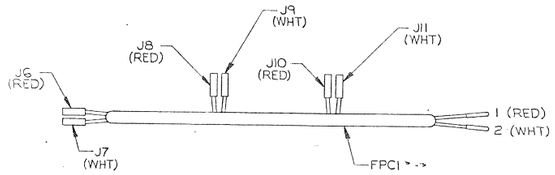

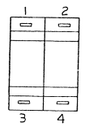

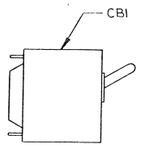

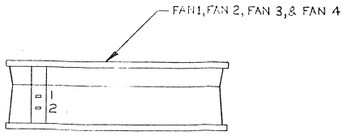

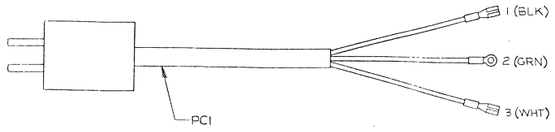

REVISIONS		
CHK	CHANGE NO.	REV.

TITLE	SIZE	CODE	NUMBER	REV.
H7420 POWER SUPPLY	E	UA	H7420-0-0	B
SCALE	SHEET	OF	DIST	

DIGITAL EQUIPMENT CORPORATION
MAYNARD, MASSACHUSETTS

PARTS LIST

MADE BY R. Thellen
DATE 1/17/75
ENG Robert J. Wolf
DATE 2/3/75

CHECKED P. Cappalianca
DATE 2/3/75
PROD J. Borenstein
DATE 2/3/75

SECTION 1
ISSUED SECT. 1

ITEM NO.	DWG NO./PART NO.	DESCRIPTION	H742ØE	H742ØF	H742ØA	H742ØB
1	E-IA-7010501-0-0	CHASSIS (H742Ø)	1	1	1	1
2	D-MD-7412459-0-0	COVER, CONTROL BOX	1	1	1	1
3	D-IA-7412461-0-0	BRKT, P.C. BOARD MTG.	1	1	1	1
4	C-IA-7413125-0-0	PLATE, ADAPTER (H742Ø)	1	1	—	—
5	C-IA-7010730-0-0	POWER INDICATOR ASSEMBLY	1	1	1	1
6	D-IA-7010729-0-0	CABLE, REGULATOR BOARD	1	1	1	1
7	D-IA-7010728-0-0	CABLE, FAN POWER	1	1	1	1
8	C-IA-7010727-1-0	POWER CORD ASSY (120V)	1	—	1	—
9	C-IA-7010727-2-0	POWER CORD ASSY (240V)	—	1	—	1
10	D-IA-7010814-0-0	TRANSFORMER ASSY	1	1	—	—
11	D-CS-5411086-0-1	POWER LINE MONITOR	1	1	1	1
12	1209403-01	FAN	4	4	4	4
13	1210191-06	CIRCUIT BREAKER (20A)	1	—	1	—
14	1210191-03	CIRCUIT BREAKER (15A)	—	1	—	1
15	9006020-01	SCR, PHL PAN HD #6-32 x .25	8	8	8	8
16	9006025-01	SCR, PHL PAN HD #6-32 x .62	16	16	16	16
17	9006565-00	NUT, KEP #10-32	8	8	—	—
18	9006563-00	NUT, KEP #8-32	1	1	1	1
19	9008185-00	NUT, KEP #6-32	5	5	5	5
20	9006840-00	SPACER, #6-32 x .19	2	2	2	2
21	9006851-00	SPACER, #6-32 x .50	2	2	2	2
22	9006633-00	WASHER, INT. TOOTH LOCK #6	24	24	24	24

TITLE POWER SUPPLY H742Ø
ASSY NO. E-UA-H742Ø-Ø-Ø
SHEET 1 OF 2
SIZE A CODE PL NUMBER H742Ø-Ø-Ø REV. B ECO NO. H7420-00002
DIST.

DEC FORM DRA 110 DEC 16-(325)-1031-N870

DIGITAL EQUIPMENT CORPORATION
MAYNARD, MASSACHUSETTS

PARTS LIST

MADE BY R. Thellen
DATE 1/17/75
ENG Robert J. Wolf
DATE 2/3/75

CHECKED P. Cappalianca
DATE 2/3/75
PROD J. Borenstein
DATE 2/3/75

SECTION 1
ISSUED SECT. 1

ITEM NO.	DWG NO./PART NO.	DESCRIPTION	H742ØE	H742ØF	H742ØA	H742ØB
23	9008509-00	RELIEF, STRAIN	1	1	1	1
24	9009165-00	CLIP, FAN MOUNTING	16	16	16	16
25	A-DC-7413184-0-0	POWER SUPPLY DECAL (H742Ø)	1	1	1	1
26	A-DC-7413186-0-0	POWER SUPPLY DECAL (H742ØE)	1	—	—	—
27	A-DC-7413185-0-0	POWER SUPPLY DECAL (H742ØF)	—	1	—	—
28	9007969-00	TERMINAL, QUICK CONNECT	4	2	4	2
29	9107370-00	WIRE, #14 AWG, IPVC	A/R	A/R	A/R	A/R
30	9008264-00	MOUNT, CABLE TIE, ADHESIVE	2	2	2	2
31	9007880-00	TIE, CABLE	2	2	2	2
32	D-IA-7011211-0-0	TRANSFORMER ASSY	—	—	1	1
33						
34	9006074-3	SCR. PH. HD. TRUSS 10x32x5/8	—	—	4	4
35	9006586	TINNERMAN SPEED NUT 10-32	—	—	4	4
36	A-DC-7413966-0-0	POWER SUPPLY DECAL (H742ØA)	—	—	1	—
37	A-DC-7413967-0-0	POWER SUPPLY DECAL (H742ØB)	—	—	—	1
38	9006021-1	SCR. PAN HD. 6-32x5/16	1	1	1	1
39	9007224	FUSE 7 AMP SLOW BLOW	1	1	1	1

TITLE POWER SUPPLY H742Ø
ASSY NO. E-UA-H742Ø-Ø-Ø
SHEET 2 OF 2
SIZE A CODE PL NUMBER H742Ø-Ø-Ø REV. B ECO NO.
DIST.

DEC FORM DRA 110 DEC 16-(325)-1031-N870