DEC-11-HADA-D

AD01-D analog-to-digital conversion subsystem engineering drawings

DIGITAL EQUIPMENT CORPORATION • MAYNARD, MASSACHUSETTS

1st Printing June 1971

AD01-D Subsystem

Drawing Number	Title
A-ML-AD01-DA	10 Bit ADC with Switch Gain (AD01-DA)
D-UA-AD01-0	10 Bit ADC with Switched Gain
A-PL-AD01-D-0	10 Bit ADC with Switched Gain (Parts List)
D-DI-AD01-D-1	Drawing Index List (AD01-D)
D-AD-7006919-0-0	Wired Assembly (AD01-D)
A-PL-7006919-0-0	Wired Assembly (Parts List) (AD01-D)
D-MU-AD01-D-02	Module Utilization (AD01-D)
A-PL-AD01-D-02	Module Utilization (Parts List) (AD01-D)
D-BS-AD01-D-03	Multiplexer
D-BS-AD01-D-04	Interface and CSR
D-BS-AD01-D-05	A/D Converter
D-IC-AD01-D-06	Analog Input Connectors
D-IC-AD01-D-09	Bus Connector
K-WL-AD01-D-0 (Complete)	Wire List (AD01-D)
A-AL-AD01-D-8	Accessory List
A-SP-AD01-D-10	Engineering Specifications
A-SP-AD01-D-12	Acceptance Procedure
A-ML-AH04-0	Sample and Hold Option AH04
A-PL-AH04-0-0	Sample and Hold (Parts List)
C-CS-A405-0-1	Sample and Hold
A-ML-AH05-0	One Bit Extender for AD01
A-PL-AH05-0-0	One Bit Extender for AD01 (Parts List)
D-CS-A862-0-1	11 Bit A/D Converter with Sign
D-CS-A812-0-1	A/D Converter
C-UA-H727-A-0	H727-A Power Supply, 115V
C-UA-H727-B-0	H727-B Power Supply, 230V
D-UA-H716-B-0	H716-B Power Supply, 115V
D-UA-H716-D-0	H716-D Power Supply, 230V

MASTER DRAWING LIST

MAINTENANCE MANUALS NO.	TITLE	UNIT VARIATIONS ADØ1-AN	ADØ1-AP	ADØ1-DA	ADØ1-DB	ADØ1-FA	ADØ1-FB
ADØ1-A	10 BIT ADC WITH 32 CH MUX	X	X	–	–	–	–
ADO1-D	10 BIT ADC WITH SWITCH GAIN	–	–	X	X	–	–
AD01-FA	COMPLEX ANALOG	–	–	–	–	X	–
AD01-FB	EXTENDED ANALOG	–	–	–	–	–	X

USED ON OPTIONS							
PDP-8I							
PDP-11							

REVISIONS REV.	DATE	CHG. NO.	APP'D.
ORIG	8/71	MISC-86	—
A	9/71	ADOID-6	P.S.
B	9/71	AD01-7	AV
C	9/71	AD01D-8	PS
D	11-71	ADOIA-10	P.S.
E	11/71	ADOIF-1	F.S.
F	12/71	ADOIF-2	AW
H	12/71	ADOIF-3	AW
J	1/72	ADOIF-4	AW
K	2-72	ADOIF-5	[illegible]

DRN. RAIMONDI	DATE 11-11-69	digital EQUIPMENT CORPORATION MAYNARD, MASSACHUSETTS
CHK'D. R. RUSSKA	DATE 12-3-69	
ENG. LINDHEIM	DATE 12-4-69	TITLE 10 BIT ADC
PROJ. ENG. LINDHEIM	DATE 12-5-69	
PROD. W.R. MILLER	DATE 12 8-69	
FIRST USED ON PDP-8I		
SCALE #		SIZE A · CODE ML · NUMBER ADØ1-Ø · REV. K
SHEET 1 OF 4		DIST.

DRA 131
Dec 16–(325)–1048–N471

PRINT SET ADØ1-A	ADØ1-D	AD01-FA	AD01-FB	DWG. NO.	REV. LET.	NO. OF SHEETS	TITLE	OPTION NO.
X	–	–	–	D-DI-ADØ1-A-1	F	1	DRAWING INDEX LIST	
X	–	–	–	D-UA-ADØ1-A-Ø	C	1	10 BIT ADC WITH 32 CH MUX	
X	–	–	–	A-PL-ADØ1-A-Ø	C	2	10 BIT ADC WITH 32 CH MUX (PL)	
X	–	–	–	D-AD-7006587-0-0	D	1	WIRED ASSY	
X	–	–	–	A-PL-7006587-0-0	D	1	WIRED ASSY (PL)	
X	–	–	–	D-BS-ADØ1-AN-Ø1	D	3	A/D CONVERTER	
X	–	–	–	D-BS-ADØ1-AN-Ø2	B	1	MULTIPLEXER	
X	–	–	–	D-BS-ADØ1-AP-Ø1	E	3	A/D CONVERTER	
X	–	–	–	D-BS-ADØ1-AP-Ø2	A	1	MULTIPLEXER	
X	–	–	–	D-MU-ADØ1-AN-Ø5	D	1	MODULE UTILIZATION	
X	–	–	–	A-PL-ADØ1-AN-Ø5	D	1	MODULE UTILIZATION (PL)	
X	–	–	–	D-MU-ADØ1-AP-Ø5	H	1	MODULE UTILIZATION	
X	–	–	–	A-PL-ADØ1-AP-Ø5	H	1	MODULE UTILIZATION (PL)	
X	–	–	–	D-IC-ADØ1-AN-Ø3		1	ANALOG INPUT CONNECTORS	
X	–	–	–	D-IC-ADØ1-AN-Ø4	B	1	I/O CONNECTORS	
X	–	–	–	D-IC-ADØ1-AP-Ø3	B	1	ANALOG INPUT CONNECTORS	
X	–	–	–	D-IC-ADØ1-AP-Ø4	A	1	I/O CONNECTORS	
X	–	–	–	A-SP-ADØ1-A-Ø5	D	23	ADØ1-AN/AP ENG. SPECIFICATION	
X	–	–	–	A-SP-ADØ1-A-Ø6	A	20	ADØ1-AN/AP CALIBRATION PROCEDURE	
X	–	–	–	K-WL-ADØ1-A-Ø2	H	1	WIRE LIST	
X	–	–	–	A-WL-ADØ1-A-Ø3	D	1	POWER WIRING LIST	
X	–	–	–	A-WL-ADØ1-A-Ø4	B	1	OPTION JUMPER LIST	

TITLE				
1Ø BIT ADC	SHEET 2 OF 4	SIZE A · CODE ML	NUMBER ADØ1-Ø	REV. K

DRA 132
DEC 16–(325)–1048–1–N471

PRINT SET						DWG. NO.	REV. LET.	NO. OF SHEETS	TITLE	OPTION NO.
ADØ1-A	ADØ1-D	AD01-FA	AD01-FB							
-	X	-	-			D-DI-ADØ1-D-1	H	1	DRAWING INDEX LIST	
-	X	-	-			D-UA-ADØ1-D-Ø	A	1	10 BIT ADC WITH SWITCH GAIN	
-	X	-	-			A-PL-ADØ1-D-Ø	A	2	10 BIT ADC WITH SWITCH GAIN (PL)	
-	X	-	-			D-AD-7006919-Ø-Ø	A	1	WIRED ASSY	
-	X	-	-			A-PL-7006919-Ø-Ø	A	1	WIRED ASSY (PL)	
-	X	-	-			D-BS-ADØ1-D-Ø3	B	1	MULTIPLEXER	
-	X	-	-			D-BS-ADØ1-D-Ø4	A	2	INTERFACE & CSR	
-	X	-	-			D-BS-ADØ1-D-Ø5	A	2	A/D CONVERTER	
-	X	-	-			D-MU-ADØ1-D-Ø2	B	1	MODULE UTILIZATION	
-	X	-	-			A-PL-ADØ1-D-Ø2	B	1	MODULE UTILIZATION (PL)	
-	X	-	-			D-IC-ADØ1-D-Ø6	C	1	ANALOG INPUT CONNECTORS	
-	X	-	-			D-IC-ADØ1-D-Ø9		1	BUS CONNECTORS	
~~-~~	~~X~~	~~-~~	~~-~~			~~D-IC-ADØ1-D-10~~		~~1~~	~~ANALOG INPUT CONNECTORS (LAB11)~~	
-	X	-	-			D-CS-A812-Ø-1	#	1	10 BIT A/D CONVERTER	A812
-	X	-	-			C-CS-H727-A-1	#	1	H727-A PWR SUPPLY SCH 110V	H727
-	X	-	-			C-CS-H727-B-1	#	1	H727-B PWR SUPPLY SCH 220V	H727
-	X	-	-			C-CS-H716-B-1	#	1	H716-B PWR SUPPLY SCH 110V	H716
-	X	-	-			C-CS-H716-D-1	#	1	H716-D PWR SUPPLY SCH 220V	H716
-	X	-	-			A-SL-AD01-D-14		1	SOFTWARE LIST	
-	X	-	-			A-AL-ADØ1-D-Ø8		1	ACCESSORY LIST	
-	X	-	-			A-SP-ADØ1-D-1Ø		22	ADØ1-DA/DB ENG. SPECIFICATION	
-	X	-	-			A-SP-ADØ1-D-11		17	ADØ1-DA/DB CALIBRATION PROCEDURE	
-	X	-	-			A-SP-ADØ1-D-12		8	ADØ1-DA/DB ACCEPTANCE PROCEDURE	
-	X	-	-			K-WL-ADØ1-D-Ø7	A	1	WIRE LIST	
X	X	-	-			A-AL-AD01-D-13		1	ACCESSORY LIST	
C	C	-	-			A-ML-AHØ4-Ø	#	2	SAMPLE & HOLD OPTION	AHØ4
C	C	-	-			A-ML-AHØ5-Ø	#	2	ONE BIT EXTENDER FOR ADØ1	AHØ5
-	X	-	-			D-IC-AD01-D-15		1	ANALOG INPUT CONNECTORS (LAB11)	

TITLE	SHEET	SIZE	CODE	NUMBER	REV.
1Ø BIT ADC	3 OF 4	A	ML	ADØ1-Ø	K

DRA 132

DEC 16-(325)-1048-1-N471

PRINT SET						DWG. NO.	REV. LET.	NO. OF SHEETS	TITLE	OPTION NO.
AD01-A	AD01-D	AD01-FA	AD01-FB							
-	-	X	-			D-AD-7008549-0-0	C	2	COMPLEX ANALOG ASSY	
-	-	X	-			D-CS-7008549-0-1		1	COMPLEX ANALOG	
-	-	X	-			A-PL-AD01-FA-0		1	AD01-FA ASSY.	
-	-	-	X			D-AD-7008546-0-0	B	2	EXTENDED ANALOG ASSY	
-	-	-	X			D-CS-7008546-0-1	B	1	EXTENDED ANALOG	
-	-	-	X			A-PL-AD01-FB-0		1	AD01-FB ASSY.	

TITLE	SHEET	SIZE	CODE	NUMBER	REV.
1Ø BIT ADC	4 OF 4	A	ML	ADØ1-Ø	K

DRA 132

DEC 16-(325)-1048-1-N471

LEGEND	
NUMBER	VARIATION
ADØ1-DA	110V INPUT
ADØ1-DB	220V INPUT

NOTES

1. FOR DWG INDEX LIST REFER TO DWG # D-DI-ADØ1-D-1.
2. ITEM #18 & #22 NOT SHOWN (#18 USED WITH ADØ1-DB) (#22 USED WITH ADØ1-DA)
3. IF OPTIONAL MODULES ARE USED ITEM #21 WILL BE REQ'D REFER TO D-MU-ADØ1-D-Ø2.

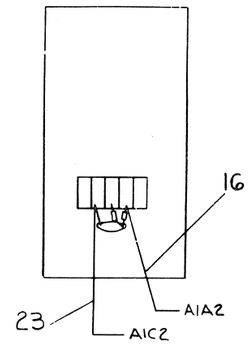

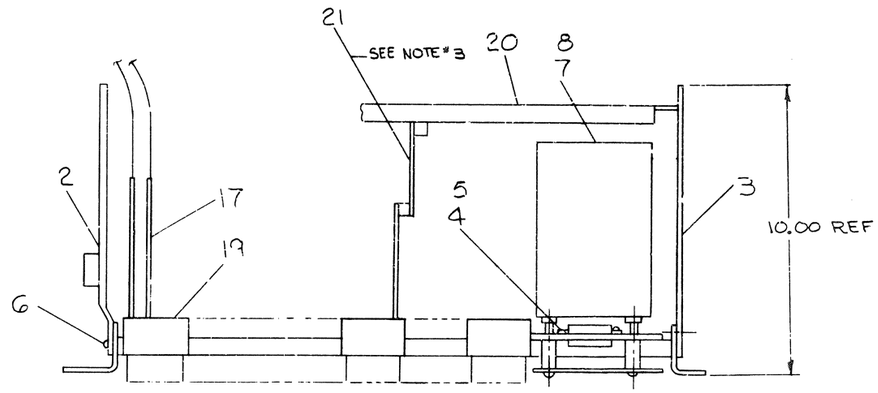

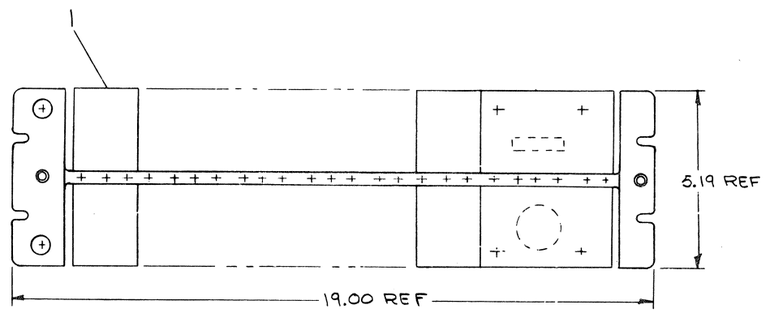

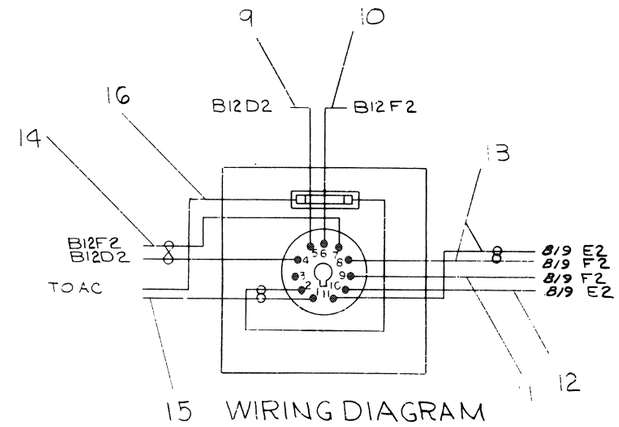

WIRING DIAGRAM

REVISIONS			
CHK	CHANGE NO.	REV	
EV	ADØ1D-00001	A	10/21/70
	A. Tavares		
	P. SEVERINO		
	Carl Lewis		10-21-70

DEC FORM NO. DRO 100

QTY.	DESCRIPTION	PART NO.	ITEM NO.

PARTS LIST

FIRST USED ON OPTION/MODEL: PDP-11

DO NOT SCALE DRAWING
UNLESS OTHERWISE SPECIFIED
DIMENSION IN INCHES
TOLERANCES
ANGLES ± 0°30'
FINAL SURFACE QUALITY
REMOVE BURRS AND BREAK SHARP CORNERS

MATERIAL —"—

FINISH —"—

DRN.	R. Sanders	DATE 6/17/70
CHK'D.	D. Mealy	DATE 7-13-70
ENG.	Paul Lewis	DATE 7/13/70
MFG. ENG.	Ralph Nelson	DATE 7/14/70
PROD.	Don Hirsch	DATE 12/2/70

NEXT HIGHER ASSY: A-ML-ADØ1-DA

SCALE —"—

SHEET 1 OF 1

digital EQUIPMENT CORPORATION
MAYNARD, MASSACHUSETTS

TITLE: 10 BIT ADC WITH SWITCHED GAIN

SIZE	CODE	NUMBER	REV.
D	UA	ADØ1-D-Ø	A

DIST. 6

REV A
NUMBER ADØ1-D-Ø
SIZE CODE D UA

DIGITAL EQUIPMENT CORPORATION
MAYNARD, MASSACHUSETTS

PARTS LIST

MADE BY G. FLANDERS	CHECKED D. HEALY	SECTION
DATE 6/9/70	DATE 6/23/70	1
ENG	PROD A. Hirsch	ISSUED SECT.
DATE Paul Swain 8/12/70	DATE 8-25-70	1

ITEM NO.	DWG NO./PART NO.	DESCRIPTION	AD01-DA	AD01-DB
1	D-AD-7006919-0-0	WIRED ASSY (AD01-D)	1	1
2	C-IA-5409090-0-0	PANEL, LEFT END ASSY	1	1
3	C-MD-5308898-0-0	PANEL, RIGHT END	1	1
4	9006634	LOCK WASHER INT TOOTH #8	3	3
5	9006210	SCR PHL, FIL HD #8-32 X 5/8 SST	3	3
6	9006509	POP RIVET #AD43ABS U.S.M.C.	8	8
7	C-UA-H727-A-0	H727-A POWER SUPPLY 110V	1	
8	C-UA-H727-B-0	H727-B POWER SUPPLY 220V		1
9	9107350-99	#22 AWG STRD WIRE YEL	A/R	A/R
10	9107350-00	#22 AWG STRD WIRE BLK	A/R	A/R
11	9107350-11	#22 AWG STRD WIRE BRN	A/R	A/R
12	9107350-55	#22 AWG STRD WIRE GRN	A/R	A/R
13	9107430-51	22 AWG TWP WIRE GRN/BRN	A/R	A/R
14	9107420-40	22 AWG TWP WIRE YEL/BLK	A/R	A/R
15	9107430-29	18 AWG TWP WIRE RED/WHT	A/R	A/R
16	9107360-22	18 AWG STRD KYNAR WIRE RED	A/R	A/R
17	D-UA-BC11A-0-0	BC11 CABLE (LGTH SPEC BY ENG)	2	2
18	D-UA-H716-D-0	H716-D POWER SUPPLY (220V)		1
19	A-MU-AD01-D-02	MODULE UTILIZATION (PL)	1	1
20	D-MAD-1945-19-1	1945 HOLD DOWN BAR (1943)	1	1
21	A-BL-H850-0-0	MODULE EXTENDER (H850)	11	11
22	D-UA-H716-B-0	H716-B POWER SUPPLY (110V)	1	

TITLE	ASSY NO.	SIZE	CODE	NUMBER	REV.	ECO NO.
10 BIT ADC WITH SWITCHED GAIN	D-UA-AD01-D-0	A	PL	AD01-D-0	A	AD0ID 00001
	SHEET 1 OF 2	DIST.	G			

DEC FORM NO.
DRA 110

DIGITAL EQUIPMENT CORPORATION
MAYNARD, MASSACHUSETTS

PARTS LIST

MADE BY G. FLANDERS	CHECKED D. HEALY	SECTION
DATE 8/12/70	DATE	1
ENG	PROD A. Hirsch	ISSUED SECT.
DATE Paul Swain 8/12/70	DATE 8-25-70	1

ITEM NO.	DWG NO./PART NO.	DESCRIPTION	
23	9107360-00	18 AWG STRD KYNAR WIRE BLK	A/R

TITLE	ASSY NO.	SIZE	CODE	NUMBER	REV.	ECO NO.
10 BIT ADC WITH SWITCHED GAIN	D-UA-AD01-D-0	A	PL	AD01-D-0	A	
	SHEET 2 OF 2	DIST.	G			

DEC FORM NO.16-1031
DRA 110

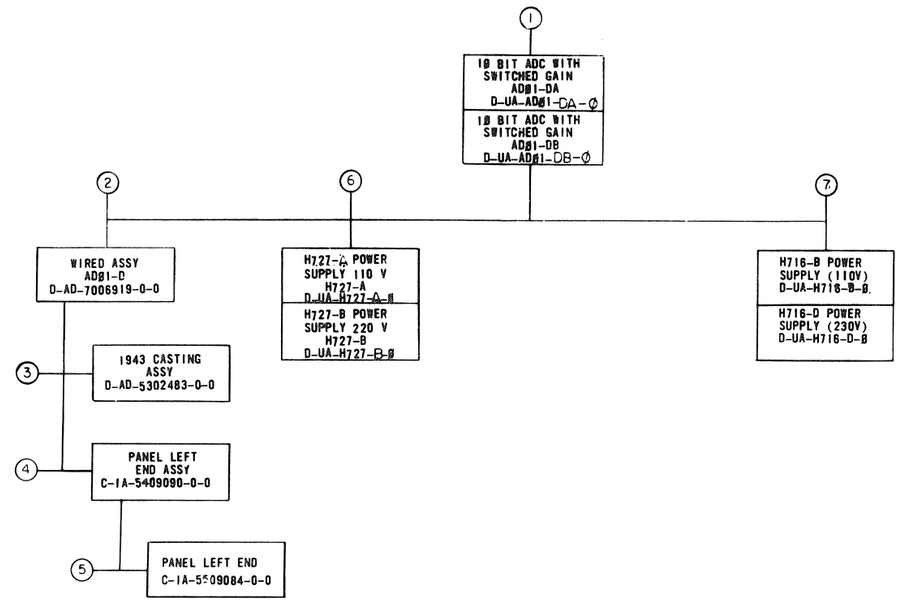

MECHANICAL			DEPT USAGE		
FIND NO.	DESCRIPTION	PART NO.	PROD	CUST	F/C
1.	10 BIT ADC WITH SWITCHED GAIN (AD01-DA)	D-UA-AD01-DA-0			
	10 BIT ADC WITH SWITCHED GAIN (AD01-DA) (PL)	A-PL-AD01-DA-0			
	10 BIT ADC WITH SWITCHED GAIN (AD01-DB)	D-UA-AD01-DB-0			
	10 BIT ADC WITH SWITCHED GAIN (AD01-DB) (PL)	A-PL-AD01-DB-0			
	PANEL, RIGHT END	C-MD-5308897-0-0			
	BC11A CABLE (LGTH. SPEC BY ENG)	C-MD-5308898-0-0			
	MODULE UTILIZATION (PL)	D-UA-BC11A-0-0			
		A-PL-AD01-D-02			
2.	WIRED ASSY (AD01-D)	D-AD-7006919-0-0			
	WIRED ASSY (AD01-D) (PL)	A-PL-7006919-0-0			
	288 PIN BLOCK TYPE H803	E-SC-1205348-0-0			
	21 POINT DECALS "A"	B-DC-5308753-0-2			
	21 POINT DECALS "B"	B-DC-5308753-0-4			
3.	1943 CASTING ASSY	D-AD-5302483-0-0			
	1943 CASTING ASSY (PL)	A-PL-5302483-0-0			
4.	PANEL LEFT END ASSY	C-IA-5409090-0-0			
5.	PANEL LEFT END	C-IA-5509084-0-0			
	POWER DECAL	C-IA-5509084-0-1			
6	H727-A POWER SUPPLY 110V	D-UA-H727-A-0			
	H727-A POWER SUPPLY 110 V (PL)	A-PL-H727-A-0			
	H727-B POWER SUPPLY 220 V	D-UA-H727-B-0			
	H727-B POWER SUPPLY 220 V (PL)	A-PL-H727-B-0			
7.	H716-B POWER SUPPLY (110V)	D-UA-H716-B-0			
	H716-B POWER SUPPLY (PL)	A-PL-H716-B-0			
	H716-D POWER SUPPLY (230V)	D-UA-H716-D-0			
	H716-D POWER SUPPLY (PL)	A-PL-H716-D-0			

ELECTRICAL			DEPT USAGE		
FIND NO.	DESCRIPTION	PART NO.	PROD	CUST	F/C
1.	10 BIT ADC	A-ML-AD01-0			
	~~(AD01-DA)~~				
	~~10 BIT ADC WITH SWITCHED GAIN (AD01-DB)~~	~~A-ML-AD01-DB~~			
	MULTIPLEXER	D-BS-AD01-D-03			
	INTERFACE & CSR	D-BS-AD01-D-04			
	A/D CONVERTER	D-BS-AD01-D-05			
	ANALOG INPUT CONNECTORS	D-IC-AD01-D-06			
	WIRE LIST AD01-D	K-WL-AD01-D-07			
	MODULE UTILIZATION	D-MU-AD01-D-02			
	MODULE UTILIZATION (PL)	A-PL-AD01-D-02			
	BUS CONNECTOR	D-IC-AD01-D-09			
	ACCESSORY LIST	A-AL-AD01-D-08			
	ENG SPECS	A-SP-AD01-D-10			
	CALIBRATION PROCEDURE	A-SP-AD01-D-11			
	ACCEPTANCE PROCEDURE	A-SP-AD01-D-12			
	ACCESSORY LIST	A-AL-AD01-D-13			
	SOFTWARE LIST	A-SL-AD01-D-14			
2.	WIRED ASSY (AD01-D)	A-AD-7006919-0-0			
	WIRED ASSY (AD01-D) (PL)	A-PL-7006919-0-0			
6.	H727-A POWER SUPPLY 110 V CIRCUIT SCHEMATIC	CS-H727-A-1			
	H727-B POWER SUPPLY 220 V CIRCUIT SCHEMATIC	CS-H727-B-1			
7.	H716-B POWER SUPPLY CIRCUIT SCHEMATIC	C-CS-H716-B-1			
	H716-D POWER SUPPLY CIRCUIT SCHEMATIC	C-CS-H716-D-1			
1.	ANALOG INPUTS CONNECTORS (LABII)	D-IC-AD01-D-15			

FIRST USED ON OPTION/MODEL
AD01-D

DO NOT SCALE DRAWING
UNLESS OTHERWISE SPECIFIED
DIMENSIONS IN INCHES
TOLERANCES
DECIMALS ± .005 FRACTIONS ± 1/64 ANGLES ± 0°30'
FINAL SURFACE QUALITY
REMOVE BURRS AND BREAK SHARP CORNERS
MATERIAL —//—
FINISH —//—

QTY.	DESCRIPTION	PART NO.	ITEM NO.
	PARTS LIST		

		DATE
DRN.		6/24/70
CHK'D.		12/3/70
ENG.		8-25-70
PROJ. ENG.		8-14-70
PROD.		8/25/70

NEXT HIGHER ASSY A-ML-AD01-0
SCALE —//—
SHEET 1 OF 1

digital EQUIPMENT CORPORATION MAYNARD, MASSACHUSETTS

TITLE DRAWING INDEX LIST (AD01-D)

SIZE D CODE D1 NUMBER AD01-D-1 REV. H
DIST.

REVISIONS				
CHK	CHANGE NO.	REV.		
FV	AD01D-00001	A	P. SEVERINO	10-8-70
	AD01D-00003	B	R SEVERINO	1-5-71
	AD01D-00004	C	R SEVERINO	2-3-71
	MISC-00086	D	SEVERINO	3-3-71
	AD01D-00006	E	VARTANIAN	4-16-71
	AD01D-00007	F	P. SEVERINO	9-13-71
	AD01D-00008	H	P. SEVERINO	9-24-71
			M. Gordon	10-5-71
			P. SEVERINO	10/1/71
			M. Gordon	10-28-71
			F. STRAIGHT	11-1-71

DEC FORM NO. DRD 100

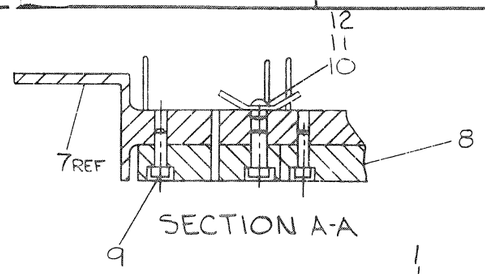

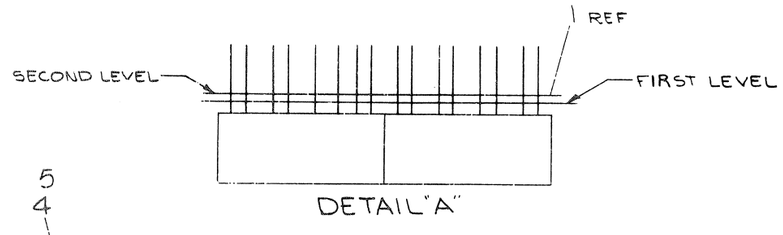

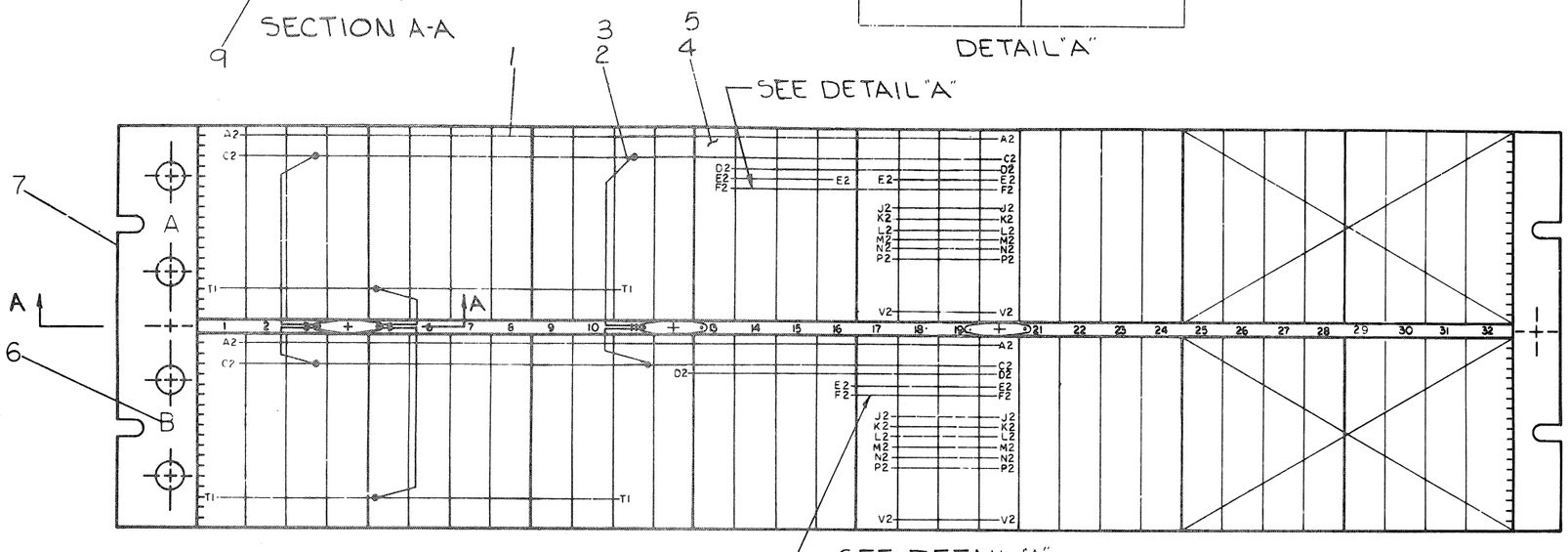

NOTES:

1. CONNECTIONS ON ITEM NUMBER 1 & 2 TO BE LOCATED ~~AND NUMBERED~~ AT MINIMUM PRACTICAL HEIGHT ABOVE BLOCKS.
2. ~~ALL CONNECTOR BLOCKS TO BE GROUNDED TO GROUND LUGS AS SHOWN, 2 PLACES.~~
3. ~~JUMPER GROUND BUSSING AS SHOWN, 8 PLACES.~~
2. USE YELLOW WIRE (ITEM #4) FOR MACHINE WRAPPED AND BLUE WIRE (ITEM #5) FOR HAND WRAPPED WIRING.

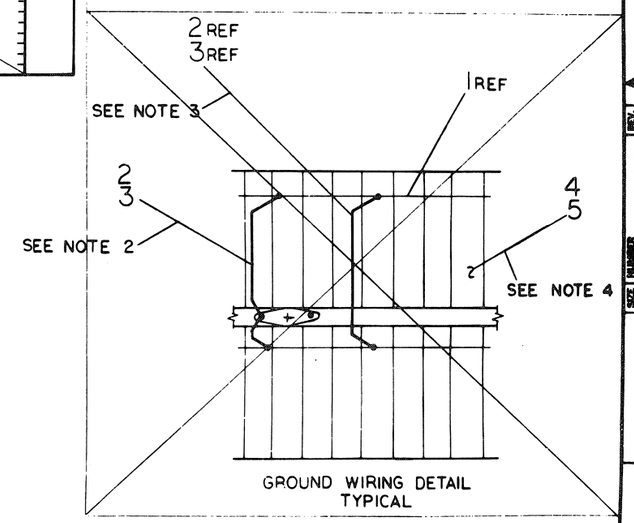

WIRE LIST

ITEM NO	DESCRIPTION AWG	DESCRIPTION COLOR	SIGNAL	FROM PIN CONNECTION	TO PIN CONNECTION	REMARKS
13	24	RED	+5V	AØ6A2	BØ6A2	WIRE WRAP
13	24	RED	+5V	A22A2	A22A2	↑
19	24	BLK	GND	A22C2	A22C2	↑
14	24	BLK	GND	AØ6C2	BØ6C2	↑
16	24	YEL	+15	B12D2	A13D2	↑
16	24	YEL		B12D2	A24V2	↑
						↑
						↑
17	24	GRN	-20V	B13E2	A13E2	↑
17	24	GRN		B22E2	A24N2	↑
						↑
15	24	ORN	-15V	A24S2	A16E2	↓
15	24	ORN		A24S2	B12E2	WIRE WRAP
						↓
18	22	BRN	GND	B12F2	A24T2	SOLDER
18	22	BRN	GND	B12F2	B12C2	↑
18	22	BRN	GND	B12F2	B16F2	↑
18	22	BRN	GND	A13F2	B16F2	SOLDER

OPTION WIRE LIST

ITEM NO	DESCRIPTION AWG	DESCRIPTION COLOR	SIGNAL	FROM PIN CONNECTION	TO PIN CONNECTION	REMARKS
5	30	BLU		BØ8P2	BØ8N2	
↑	↑	↑		A15S2	A15V2	
				AØ5D1	AØ5C2	
				AØ9A1	AØ8D1	
				AØ9C1	AØ8E1	
				AØ9D1	AØ8F1	
				AØ9F1	AØ8H1	
				AØ9E2	AØ8J1	
				AØ9J1	AØ8K1	
				AØ9H2	AØ8L1	
				AØ9L1	AØ8M1	
↓	↓	↓		AØ9K2	AØ8N1	
5	30	BLU		AØ9N1	AØ8P1	
5	30	BLU		A22A2	A22C2	

REVISIONS		
CHGK	CHANGE NO.	REV.
	ADØ1D-00003	A
	SEVERINO	2/5/71

DEC FORM NO. 116

FIRST USED ON OPTION/MODEL	QTY.	DESCRIPTION	PART NO.	ITEM NO.
ADØ1-D		PARTS LIST		

DO NOT SCALE DRAWING

UNLESS OTHERWISE SPECIFIED
DIMENSION IN INCHES
TOLERANCES
DECIMALS ± .005 FRACTIONS ± 1/64 ANGLES ± 0°30'
FINAL SURFACE QUALITY
REMOVE BURRS AND BREAK SHARP CORNERS

MATERIAL

FINISH

		DATE
DRN.		6/10/70
CHKD.		7-8-70
ENGR.		7/21/70
PROJ. ENG.		7/21/70
PROD.		1/25/70

NEXT HIGHER ASSY: D-UA-ADØ1-D-Ø

SCALE NONE

SHEET 1 OF 1

digital EQUIPMENT CORPORATION
MAYNARD, MASSACHUSETTS

TITLE
WIRED ASS'Y
(ADØ1-D)

SIZE D CODE AD NUMBER 7006919-0-0 REV. A

DIST.

SIZE D NUMBER AD-7006919-0-0 REV. A

DIGITAL EQUIPMENT CORPORATION
MAYNARD, MASSACHUSETTS

PARTS LIST

MADE BY G. FLANDERS DATE 6/9/70	CHECKED D. HEALY DATE 6/16/70	SECTION 1
ENG Paul V. Severin DATE 8/20/70	PROD A. Hirsch DATE 8-25-70	ISSUED SECT. 1

ITEM NO.	DWG NO./PART NO.	DESCRIPTION	QUANTITY/VARIATION
1	1205541	BUS STRIP	A/R
2	9107560-01	#22 AWG BUS WIRE	A/R
3	9107265-09	#22 TUBING TEFLON (WHT)	A/R
4	91057 40-44	#30 AWG SOLID KYNAR WIRE (YEL)	A/R
5	9105740-66	#30 AWG SOLID KYNAR WIRE (BLU)	A/R
6	B-DC-5308753-0-2	21 POINT DECALS, A	A/R
6	B-DC-5308753-0-4	21 POINT DECALS, B	A/R
7	D-AD-5302483-0-0	1943 CASTING ASSY	1
8	E-SC-1205348-0-0	288 PIN BLOCK TYPE H8Ø3	6
9	9006210	SCR PH HD, FIL #8-32 x 5/8	12
10	9006035-1	SCR PHL HD PAN #8-32 x 1/4 LG	3
11	9006634	WASHER INT TOOTH LOCK #8	3
12	9007597	TERM #2116-08-00 SHAKEPROOF	3
13	9107450-22	#24 AWG STRD TEF INS WIRE (RED)	A/R
14	9107450-00	#24 AWG STRD TEF INS WIRE (BLK)	A/R
15	9107450-33	#24 AWG STRD TEF INS WIRE (ORN)	A/R
16	9107450-44	#24 AWG STRD TEF INS WIRE (YEL)	A/R
17	9107450-55	#24 AWG STRD TEF INS WIRE (GRN)	A/R
18	9107420-11	#22 AWG STRD TEF INS WIRE (BRN)	A/R

TITLE	ASSY NO.	SIZE	CODE	NUMBER	REV.	ECO NO.
WIRED ASSY ADØ1-D	D-AD-7006919-0-0	A	PL	7006919-0-0	A	ADØID-00003
	SHEET 1 OF 1	DIST.				

DEC FORM NO.
DRA 110

SEE NOTE #2

Slot	1	2	3	4	5	6	7	8	9	10	11	12	13	14	15	16	17	18	19	20	21	22
USAGE	BC11A CABLE	** BC11A CABLE	M105	M784	M783	M286	M113		M111	G736	M302	A812	A862		* A405	A320	A124	A124	A124	A124	M988	M581
A			SSYN L SELECT Ø6 H OUT LOW H IN H	SELECT ØØH SELECT Ø2 H SELECT Ø4 H OUT HIGH H	ST Ø6 EEØ1 ER15 F INT H PSØ2 L D15 L DØ7 L	RH H D14 L DØ4 L D13L D12L D11L DØ6L D1ØL DØ9L DØ5L DØ8L ER15 GSØØ MCØ3	GSØ1 MCØ4 MCØ2 HOLD H ~G SGN L CLK LOW H B INIT L +3V CLK HIGH H EEØ1 (Ø) H B INIT L TRACK H		~BIT Ø8 H ~BIT Ø2 H ~BIT Ø3 H ~BIT Ø5 H ~BIT Ø7 H ~BIT Ø9 H CONV L DNØ7 H ~BIT Ø1 H ~BIT Ø4 H ~BIT Ø6 H ~BIT Ø8 H ADPD L HOLD H ~PSØ2L	BRØ7 L BRØ6 L BRØ5 L BRØ4 L BRBL BG-Ø7 IN H BG-Ø7 OUT H BG-Ø6 IN H	C SGN L C SGN L	BIT ØØH THRU BIT Ø9H	SIGN - BIT Ø8 H THRU Ø2			CONV INPUT CONV INPUT	CHØØ CHØ1 CHØ2 CHØ3	CHØ4 CHØ5 CHØ6 CHØ7	CHØ8 CHØ9 CH1Ø CH11	CH12 CH13 CH14 CH15	EXT IN CHØ1 CHØ3 CHØ5 CHØ7 CHØ9 CH11 CH13 CH15 EXT COM	EXT INA CHØØ CHØ2 CHØ4 CHØ6 CHØØ CH1Ø CH12 CH14
USAGE			M782	M785	M783	M286	M112	M302	M617	M161	M302					A124	A124	A124	A124	A124	M988	
B			DØ7L DØ5L DØ3L INTR L BRB L INTR DONE B H	INTR DONE BH DØ6L DØ4L DØ2L INTR DONE A H STINTR BL +3V	GSØ1 GSØØ MCØ4 MCØ3 MCØ2 MCØ1 MCØØ 1EØ6 ER15 DØ3 L SEL A H	DØ7 L DØØ L DØ2 L DØ2 L DØ1 L ADRD L MCØØ EEØ1 MCØ1 1EØ6 ST ØØ	CLK LOW H DI CONV L ~PSØ2 ~ PSØ2 L TRACK H ~ PSØ2 L B INTR H		CLK HIGH H B INT L DNØ7 H DNØ7 H	CHØØ THRU CH31	CK ER H CONV L						CONV INPUT CONV INPUT CONV INPUT CONV INPUT	CH16 CH17 CH18 CH19	CHØØ CH21 CH22 CH23	CH24 CH25 CH26 CH27	CH28 CH29 CH3Ø CH31	CH17 CH19 CH21 CH23 CH25 CH27 CH29 CH31	CH16 CH18 CHØØ CH22 CH24 CH26 CH28 CH3Ø

SEE NOTE 1

Slot	23	24	25	26	27	28	29	30	31	32	33	34	35	36	37	38	39	40	41	42	43	44
USAGE		A7Ø8																				
A		+15V -15V ANA GND +2ØV																				
USAGE																						

* OPTIONAL - SEE D-BS-ADØ1-D-Ø5

** IF LAST PERIPHERAL ON BUS, USE M93Ø TERMINATOR CARD IN SLOT ABØ2

NOTE: 1. MODULE A124 SLOTS 17A THRU 20A & 17B THRU 20B ARE OPTIONAL AND INSERTED AS REQUIRED 4 CHANNELS PER MODULE

2. G736 REQUIRES ONE 5408778 PRIORITY JUMPER PLUGGED INTO BOARD TO BE OPERATIVE.

REVISIONS	CHANGE NO.	REV.
CHK	ADØ1D-ØØØØ3	A
	SEVERINO	
	2-3-71	
CHK	ADØ1D-ØØØØ4	B
	SEVERINO	
	5-4-71	

DEC FORM NO. DRD 112

FIRST USED ON OPTION/MODEL: ADØ1-D

DO NOT SCALE DRAWING

UNLESS OTHERWISE SPECIFIED
DIMENSION IN INCHES
TOLERANCES
DECIMALS ± .005 FRACTIONS ± 1/64 ANGLES ± 0°30'
FINAL SURFACE QUALITY
REMOVE BURRS AND BREAK SHARP CORNERS

MATERIAL

FINISH

		DATE
DRN.		
CHK'D.		1-13-70
ENG.		
PROJ. ENG.		
PROD.		

NEXT HIGHER ASSY: A-MU-ADØ-D

SCALE

SHEET OF

digital EQUIPMENT CORPORATION
MAYNARD, MASSACHUSETTS

TITLE: MODULE UTILIZATION

SIZE D CODE MU NUMBER ADØ1D-D REV.

DIST

DIGITAL EQUIPMENT CORPORATION
MAYNARD, MASSACHUSETTS

PARTS LIST

MADE BY G. FLANDERS DATE 6/3/70	CHECKED D. HEALY DATE 6/22/70	SECTION 1
ENG. [illegible] Severino DATE 7/25/70	PROD R. Hirsch DATE 8-25-70	ISSUED SECT. 1

ITEM NO.	DWG NO./PART NO.	DESCRIPTION	QUANTITY/VARIATION AD01-D	* OPTIONAL
	M105	ADDRESS SELECTOR M105	1	
	M784	UNIBUS RECEIVERS M784	1	
	M783	UNIBUS DRIVERS M783	2	
	M2Ø6	SIX FLIP FLOPS M2Ø6	2	
	M113	1Ø-2 INPUT NAND GATES M113	1	
	M111	INVERTER M111	1	
	G736	REQUEST JUMPER	1	
	A812	10 BIT ADC A812	1	
	M302	DUAL DELAY MULTIVIBRATOR M302	3	
	A22Ø	SELECTABLE GAIN BUFF. AMP. A220	1	
	A124	FOUR INPUT MULTIPLEX. SW. A124	1	8
	M9Ø8	CONNECTOR MODULE M9Ø8	2	
	M782	INTERUPT CONTROL M782	1	
	M785	UNIBUS TRANSCIEVERS M785	1	
	A7Ø8	DUAL VOLT. REGULATOR A7Ø8	1	
	M112	NOR GAT M112	1	
	M617	6-4 INPUT MOR BUFFERS M617	1	
	M161	TO OCTAL/DECIMAL DECODER M161	1	
	M501	SCMITT TRIGGER	1	
*	A405	SAMPLE & HOLD	0	1
	5408778-0-0	PRIORITY JUMPER USED ON G736	1	
*	A862	10 BIT & SIGN ADC	0	1

TITLE	ASSY NO.	SIZE	CODE	NUMBER	REV.	ECO NO.
MODULE ULILIZATION LIST	D-MU-ADØ1-D-Ø2	A	PL	-ADØ1-D-Ø2	B	ADØ1D-00004
	SHEET 1 OF 1	DIST.				

DEC FORM NO.
DRA 110