"THE MATERIAL HEREIN IS FOR INFORMATION PURPOSES ONLY AND IS SUBJECT TO CHANGE WITHOUT NOTICE. DIGITAL EQUIPMENT CORPORATION ASSUMES NO RESPONSIBILITY FOR ANY ERRORS WHICH MAY APPEAR HEREIN."

FIELD MAINTENANCE PRINT SET

"THIS DRAWING AND SPECIFICATIONS, HEREIN, ARE THE PROPERTY OF DIGITAL EQUIPMENT CORPORATION AND SHALL NOT BE REPRODUCED OR COPIED OR USED IN WHOLE OR IN PART AS THE BASIS FOR THE MANUFACTURE OR SALE OF ITEMS WITHOUT WRITTEN PERMISSION. COPYRIGHT © 1978, DIGITAL EQUIPMENT CORPORATION."

TABLE OF CONTENTS

B-TC-KK11-A-3	CACHE MEMORY OPTION (TC)
B-DD-KK11-A	CACHE MEMORY OPTION
D-UA-KK11-A-Ø	CACHE MEMORY OPTION
D-BD-KK11-A-1	BLOCK DIAGRAM
D-UA-M8268-Ø-Ø	CACHE MEMORY OPTION
B-PL-M8268-Ø-Ø	CACHE MEMORY OPTION (PL)
D-CS-M8268-Ø-1	CACHE MEMORY OPTION (CS)
D-UA-H8822-Ø-Ø	TRICONN BOARD
B-PL-H8822-Ø-Ø	TIRCONN BOARD (PL)
D-CS-H8822-Ø-1	TRICONN BOARD (CS)
D-UA-H8821-Ø-Ø	BOARD INTERCONNECT 40 PIN
B-PL-H8821-Ø-Ø	BOARD INTERCONNECT 40 PIN (PL)
D-CS-H8821-Ø-1	BOARD INTERCONNECT 40 PIN (CS)
A-PL-KK11-A-2	SHIPPING LIST

UNIT VARIATIONS COVERED BY THIS PRINT SET
KK11-A

KK11-A
Field Maintenance Print Set

Digital Equipment Corporation

PRINT SET ORDER NO.
MPØØ574

REVISIONS	REV.	CHG. NO.	DATE
	NR		

USED ON OPTION/MODEL	
SHEET I OF 1	

DRN. R. PUDELKO	DATE 1 JAN 1978	TITLE: CACHE MEMORY OPTION
CHK'D	DATE 8-15-78	
PROJ. ENG	DATE 15-AUG 78	
FIELD SERV.	DATE 15-AUG-78	

SIZE	CODE	NUMBER	REV.
B	TC	KK11-A-3	C
DIST.			

digital

EN-01124-16-N675-(327)

DRB 124

digital EQUIPMENT CORPORATION MAYNARD MASSACHUSETTS

DRAWING DIRECTORY

"THIS DRAWING AND SPECIFICATIONS, HEREIN, ARE THE PROPERTY OF DIGITAL EQUIPMENT CORPORATION AND SHALL NOT BE REPRODUCED OR COPIED OR USED IN WHOLE OR IN PART AS THE BASIS FOR THE MANUFACTURE OR SALE OF ITEMS WITHOUT WRITTEN PERMISSION. COPYRIGHT © 1978 , DIGITAL EQUIPMENT CORPORATION"

CUSTOMER PRINT SET INDEX

SEQUENCE

SEQUENCE

THIS IS PRINT SET

NOTE: FOR FIELD MAINTENANCE PRINT SET REFER TO: MPØØ574

UNIT VARIATIONS		PRINT SET
VAR	TITLE	
KK11-A	CACHE MEMORY OPTION	

REVISIONS		
REV		
CHG. NO.		
DATE		

USED ON OPTION/MODEL		DRN.	DATE	TITLE
		R. PUDELKO	1/19/78	
		CHK'D.	DATE	
			8-8-78	
		PROJ ENG.	DATE	CACHE MEMORY OPTION
			15-AUG-78	
		PROD.	DATE	
			Aug 8 78	
		FIELD SERV.	DATE	
			15-AUG-78	
SHEET 1	OF 2			

SIZE	CODE	NUMBER	REV
B	DD	KK11-A	C
DIST			

DRB 106

FIND NO.	DRAWING NO.	DESCRIPTION	TYPE
1	MPØØ574	FIELD MAINTENANCE PRINT SET (MP)	-
	B-TC-KK11-A-3	FIELD MAINTENANCE PRINT SET (TC)	-
	D-UA-KK11-A-Ø	CACHE MEMORY OPTION	E/M
	D-BD-KK11-A-1	BLOCK DIAGRAM	E
	A-PL-KK11-A-2	SHIPPING LIST	-
2	B-DD-M8268-Ø	CACHE MEMORY OPTION	-
3	B-DD-H8822-Ø	TRICONN BOARD	-
4	B-DD-H8821-Ø	BOARD INTERCONNECT 40 PIN	-

FIND NO.	DRAWING NO.	DESCRIPTION	TYPE

TYPE: E ELECTRICAL
M MECHANICAL
E/M ELECTRO/MECHANICAL

digital

TITLE	SHEET	OF	SIZE	CODE	NUMBER	REV
CACHE MEMORY OPTION	2	2	B	DD	KK11-A	C

DRB 108A

TW

4

"THIS DRAWING AND SPECIFICATIONS, HEREIN, ARE THE PROPERTY OF DIGITAL EQUIPMENT CORPORATION AND SHALL NOT BE REPRODUCED OR COPIED OR USED IN WHOLE OR IN PART AS THE BASIS FOR THE MANUFACTURE OR SALE OF ITEMS WITHOUT WRITTEN PERMISSION.
COPYRIGHT © , DIGITAL EQUIPMENT CORPORATION"

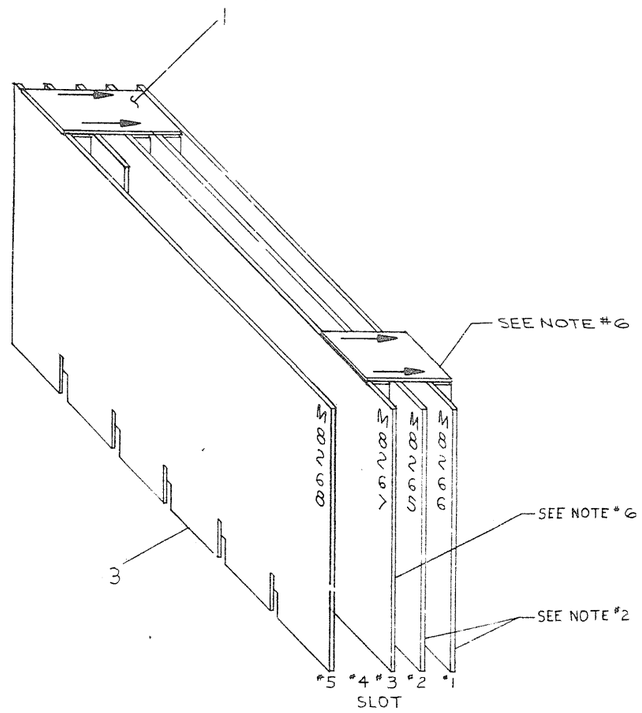

CONFIGURATION "A"
SEE NOTE #3

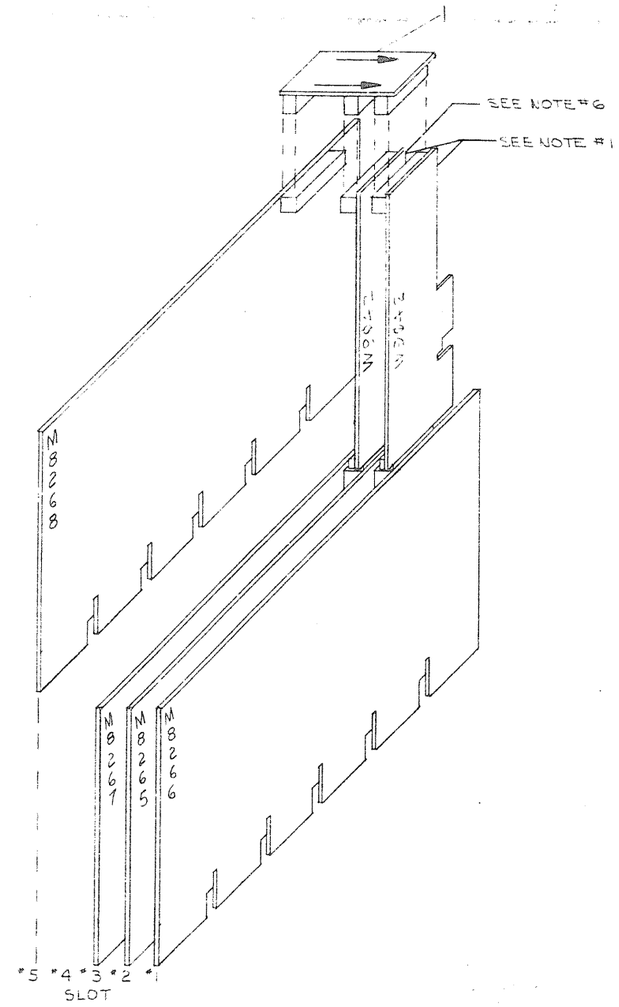

CONFIGURATION "B"
SEE NOTE #3

NOTES:

1. THE W9Ø42 EXTENDER BD. ASSY. IS STORED IN THE BACKPLANE AND IS USED FOR SOME MAINTENANCE OPERATIONS.
2. MODULES M8265 AND M8266 ARE PART OF KD11-EA AND ARE SHOWN FOR REF. ONLY.
3. ALL CONFIGURATIONS SHOWN ARE USED IN THE BA11-K (10 1/2 INCH BOX) OR BA11-L (5 1/4 BOX).
4. CONFIGURATION C SHOWS SLOT 3 UTILIZATION FOR EITHER KK11-A OR FP11-A WHEN ONLY ONE IS PRESENT.
5. CONFIGURATIONS B & D SHOW TYPICAL MAINTENANCE SET UP.
6. M8267, 5412416 AND W9Ø42 ARE PART OF FP11-A AND ARE SHOWN FOR REF. ONLY.

	DESCRIPTION	DWG./PART NO.	ITEM NO.
1	PLASTIC BAG, 9"X12"	99-05129-25	5
1	RESISTER 1K, 1/4W, 1%	13-03114-00	4
1	CACHE MEMORY (KK11-A)	D-UA-M8268-Ø-Ø	3
1	BOARD, INTERCONN 40 PIN	D-UA-H8821-Ø-Ø	2
1	TRICONN BOARD	D-UA-H8822-Ø-Ø	1

UNLESS OTHERWISE SPECIFIED DIMENSIONS ARE IN INCHES

ANGLES ±0° 30'	CLASS OF ACCURACY (CHECK ONE)	NOMINAL DIMENSION RANGE INCHES: OVER 0 TO 0.2	OVER 0.2 TO 1.2	OVER 1.2 TO 4.0	OVER 4.0 TO 12.0	OVER 12.0 TO 40.0	OVER 40.0 TO 80.0
SURFACE QUALITY IN MICROINCHES	MEDIUM	±.004	±.008	±.012	±.016	±.024	±.04
	PREFERRED	±.012	±.016	±.025	±.04	±.063	±0.1

QUANTITY & VARIATION

THIRD ANGLE PROJECTION

REMOVE BURRS AND BREAK SHARP CORNERS

DO NOT SCALE DWG

MATERIAL SEE PARTS LIST

FINISH

DRN. R. Rudeller 25 JAN 75
CHK'D
ENG.
PROJ. ENG.
PROD.

NEXT HIGHER ASSY. B-DD-KK11-A
SCALE NONE
SHEET 1 OF 2

FIRST USED ON 11-34A

digital

TITLE CACHE MEMORY OPTION

SIZE D | CODE UA | NUMBER KK11-A-Ø | REV. C

DIST.

REVISIONS: CHK | CHANGE NO. | REV.

TW

"THIS DRAWING AND SPECIFICATIONS, HEREIN, ARE THE PROPERTY OF DIGITAL EQUIPMENT CORPORATION AND SHALL NOT BE REPRODUCED OR COPIED OR USED IN WHOLE OR IN PART AS THE BASIS FOR THE MANUFACTURE OR SALE OF ITEMS WITHOUT WRITTEN PERMISSION.
COPYRIGHT © 1975 DIGITAL EQUIPMENT CORPORATION"

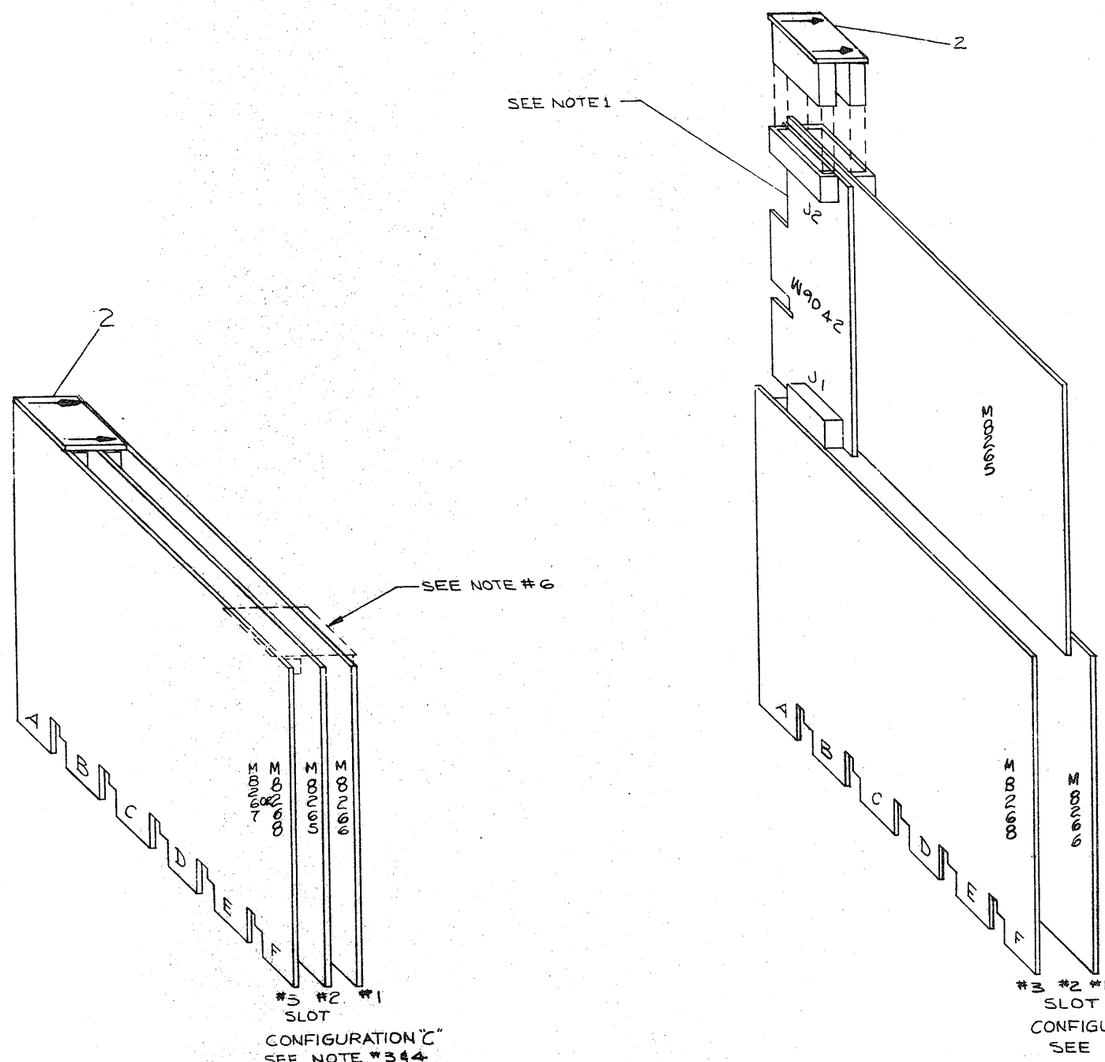

REVISIONS		
CHK	CHANGE NO.	REV.

TITLE	SIZE	CODE	NUMBER	REV.
CACHE MEMORY OPTION	D	UA	KK11-A-Ø	C
SCALE NONE	SHEET 2 OF 2	DIST.		

TW

6

"THIS DRAWING AND SPECIFICATIONS, HEREIN, ARE THE PROPERTY OF DIGITAL EQUIPMENT CORPORATION AND SHALL NOT BE REPRODUCED OR COPIED OR USED IN WHOLE OR IN PART AS THE BASIS FOR THE MANUFACTURE OR SALE OF ITEMS WITHOUT WRITTEN PERMISSION.
COPYRIGHT © 1978 DIGITAL EQUIPMENT CORPORATION"

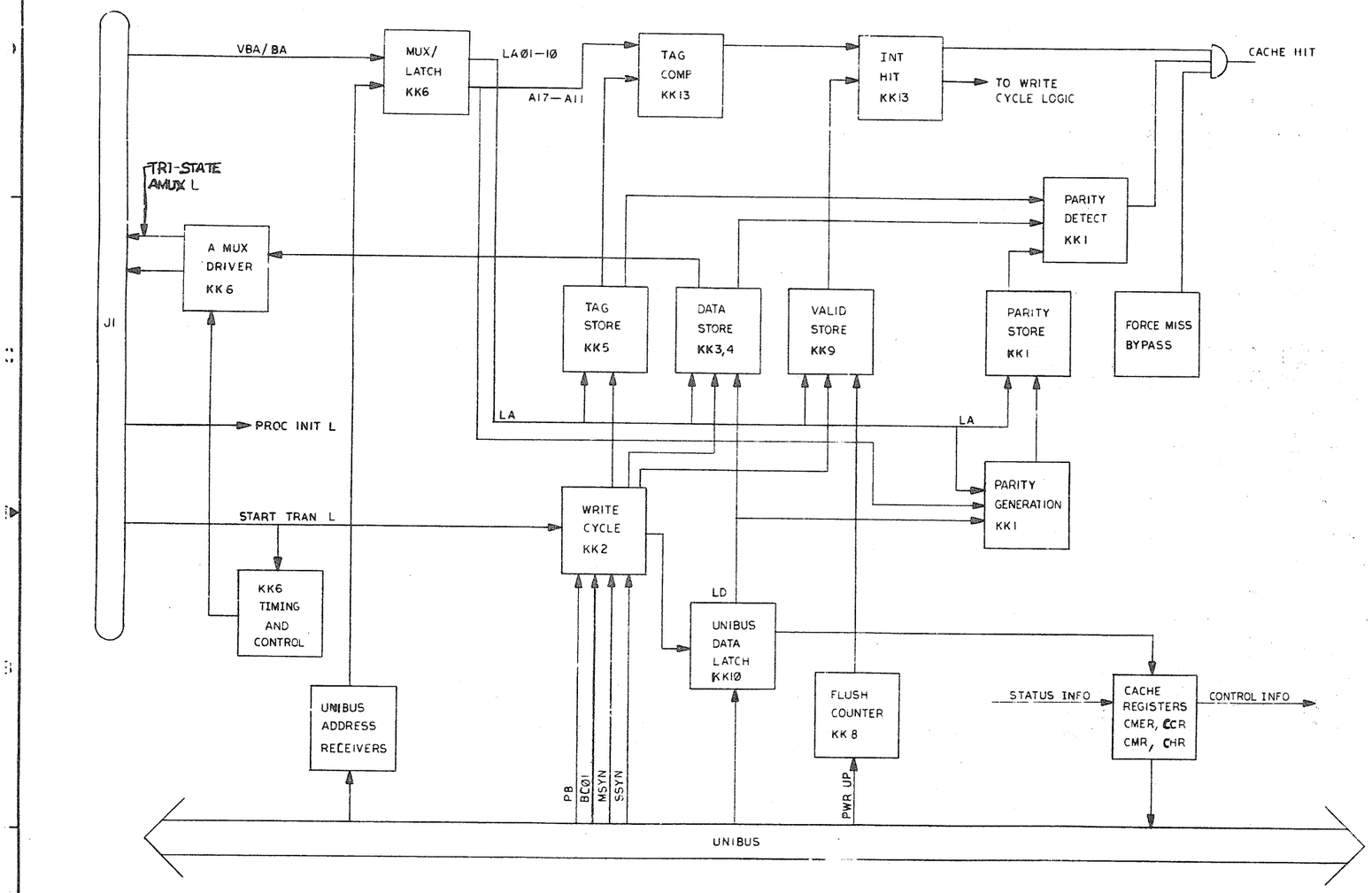

CACHE RESPONSE MATRIX

	DMA		CPU	
	MISS	HIT	HIT	MISS
READ	NOTHING	NOTHING	CACHE READ	WRITE DATA WRITE TAG WRITE VALID
READ BYPASS	NOTHING	INVALIDATE	INVALIDATE	NOTHING
WRITE BYPASS	NOTHING	INVALIDATE	INVALIDATE	NOTHING
WRITE	NOTHING	INVALIDATE	WRITE DATA WRITE VALID	NOTHING

DRN. Joseph	23 MAR 78	FIRST USED ON KK11-A
CHK'D		TITLE CACHE MEMORY OPTION
ENG.		
PROJ. ENG.		
PROD.		
NEXT HIGHER ASSY. D-UA-KK11-A-0		SIZE D CODE BD NUMBER KK11-A-1 REV. C
SCALE NONE		
SHEET 1 OF 1		DIST.

REVISIONS: CHK | CHANGE NO. | REV.

THIS DRAWING AND SPECIFICATIONS, SEPARATELY AND THEIR PROPERTY OF DIGITAL EQUIPMENT CORPORATION AND SHALL NOT BE REPRODUCED IN WHOLE OR IN PART OR TO BE COPIED OR USED IN ANY WAY FOR THE CONSTRUCTION OF ANY THING WITHOUT WRITTEN PERMISSION.
COPYRIGHT © 1978 DIGITAL EQUIPMENT CORPORATION

COMPONENT SIDE VIEW

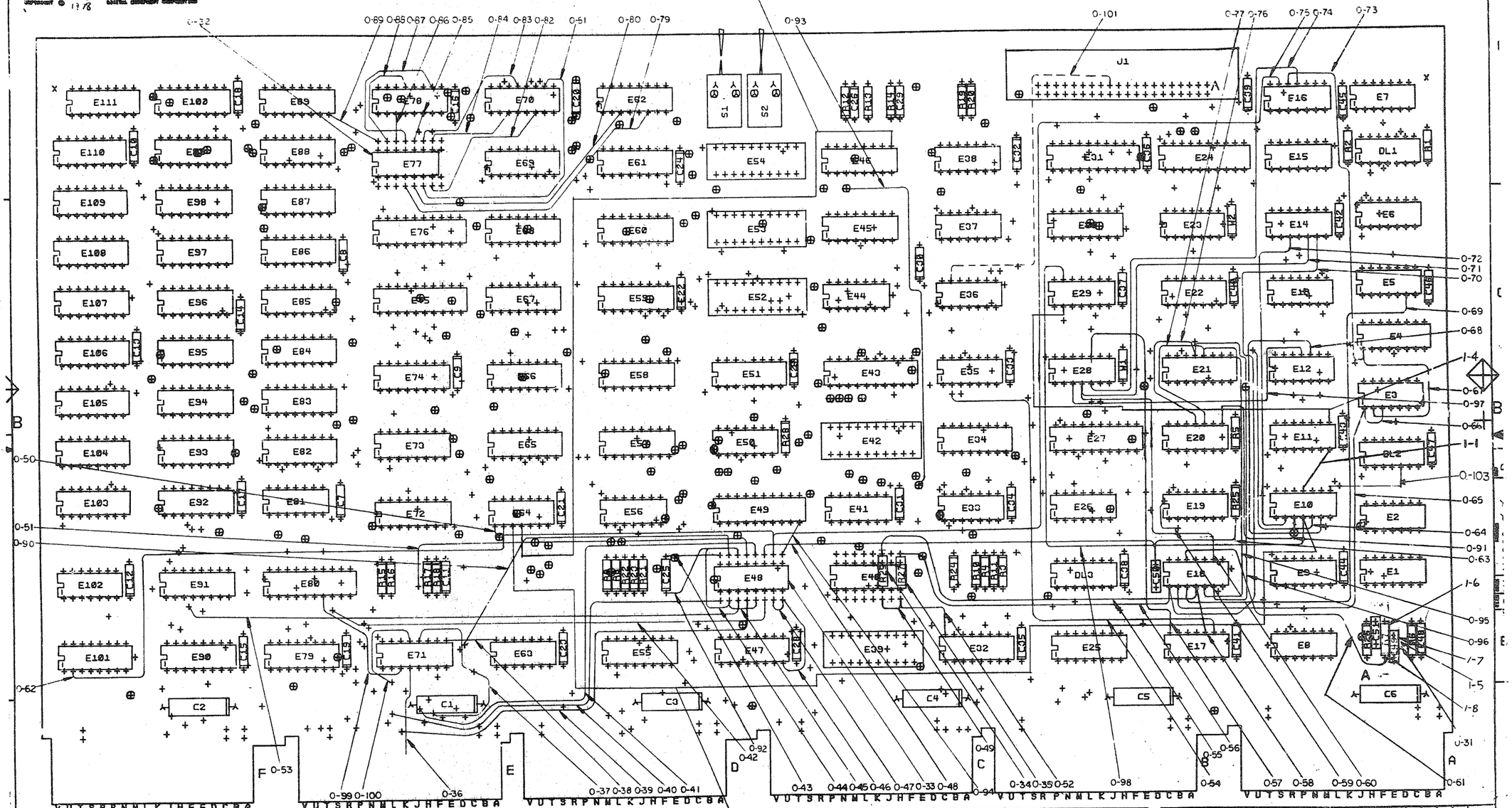

NOTES:

CHG	CHANGE NO	REV
	M8268T WO01	D
	M. BLAKE	

ECO: REV.	D
P.C. DESIGN DATA BASE REV.	D

SIGNATURES	DATE
DRN. M. Swan	5-6-78
CHK'D. R. DAY	5-12-78
ENG.	7-14-78
PROJ. ENG.	7-31-78
PROD.	7-14-78
SCALE 2/1	
SHT. 1 OF 8	
NEXT HIGHER ASSY. B-DD M8268-0	

digital

TITLE 11/34 CACHE

SIZE	CODE	NUMBER	REV
D	VA	M8268-00	D

TW

MS#M4816

"THIS DRAWING AND SPECIFICATIONS, HEREIN, ARE THE PROPERTY OF DIGITAL EQUIPMENT CORPORATION AND SHALL NOT BE REPRODUCED OR COPIED OR USED IN WHOLE OR IN PART AS THE BASIS FOR THE MANUFACTURE OR SALE OF ITEMS WITHOUT WRITTEN PERMISSION.
COPYRIGHT © DIGITAL EQUIPMENT CORPORATION"

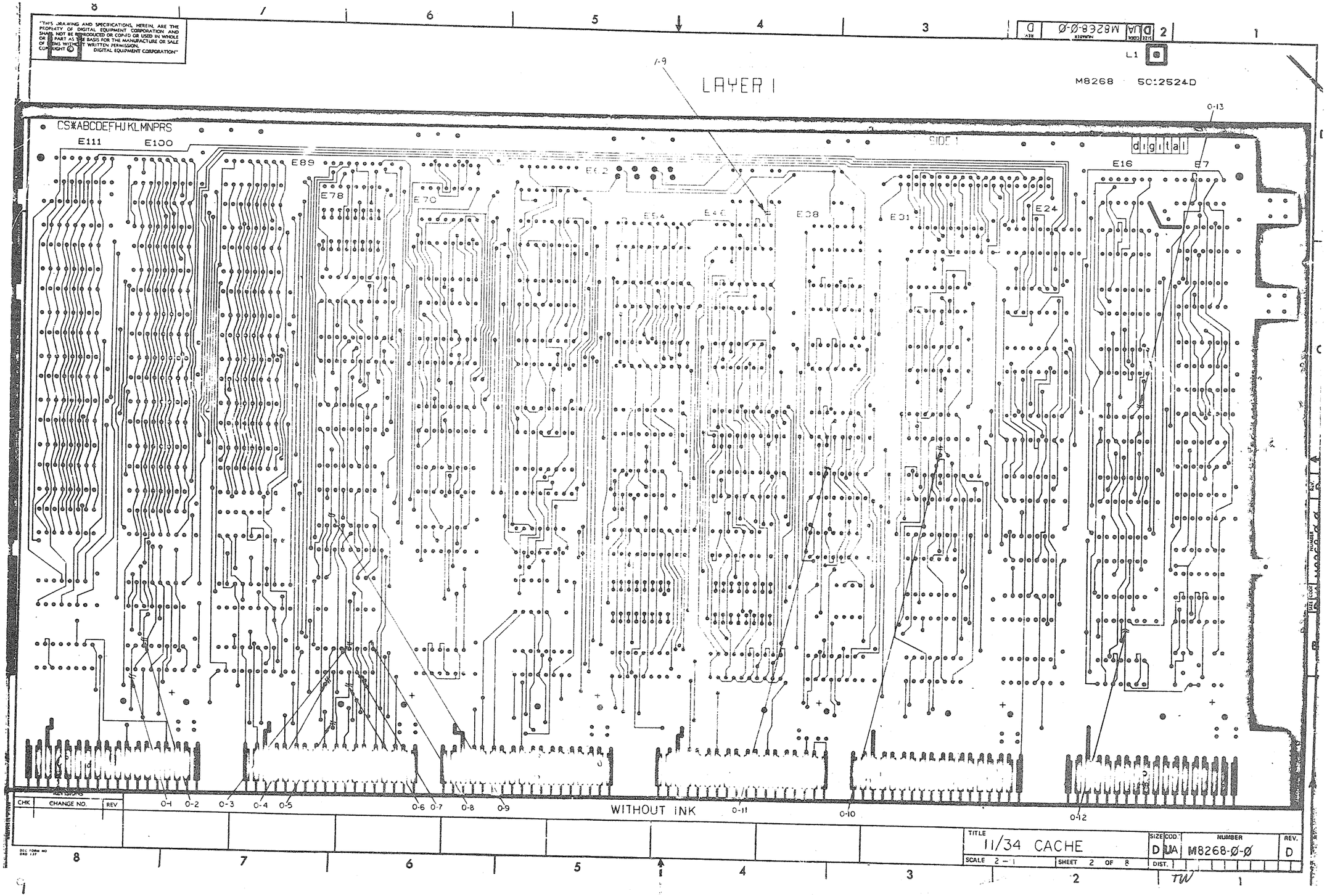

"THIS DRAWING AND SPECIFICATIONS HEREIN, ARE THE PROPERTY OF DIGITAL EQUIPMENT CORPORATION AND SHALL NOT BE REPRODUCED OR COPIED OR USED IN WHOLE OR IN PART AS THE BASIS FOR THE MANUFACTURE OR SALE OF ITEMS WITHOUT WRITTEN PERMISSION. COPYRIGHT © DIGITAL EQUIPMENT CORPORATION"

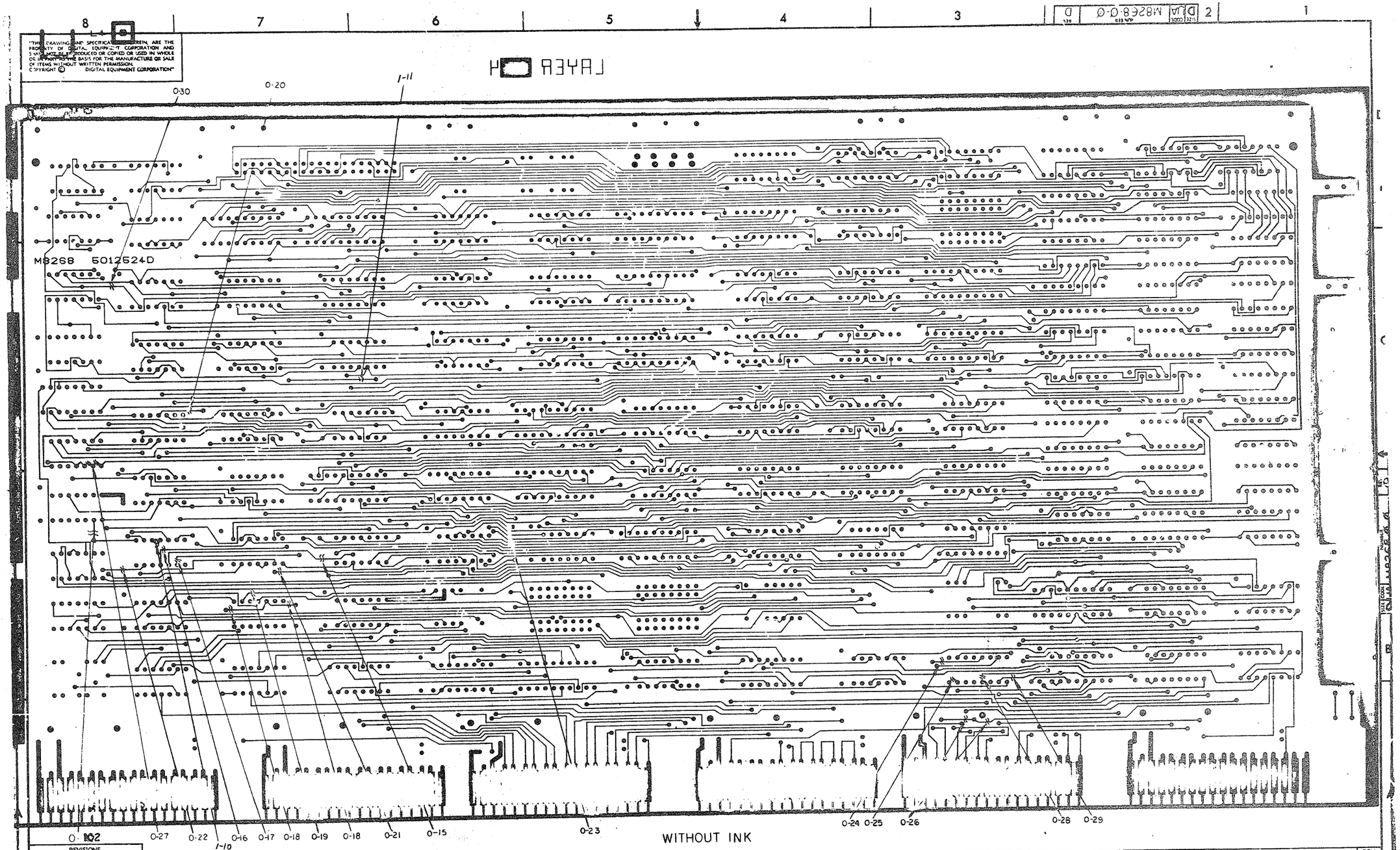

REVISIONS		
CHK	CHANGE NO.	REV

TITLE	SIZE	CODE	NUMBER	REV.
11/34 CACHE	D	UA	M8268-0-0	D
SCALE 2 – 1	SHEET 3 OF 8		DIST	

TW

10

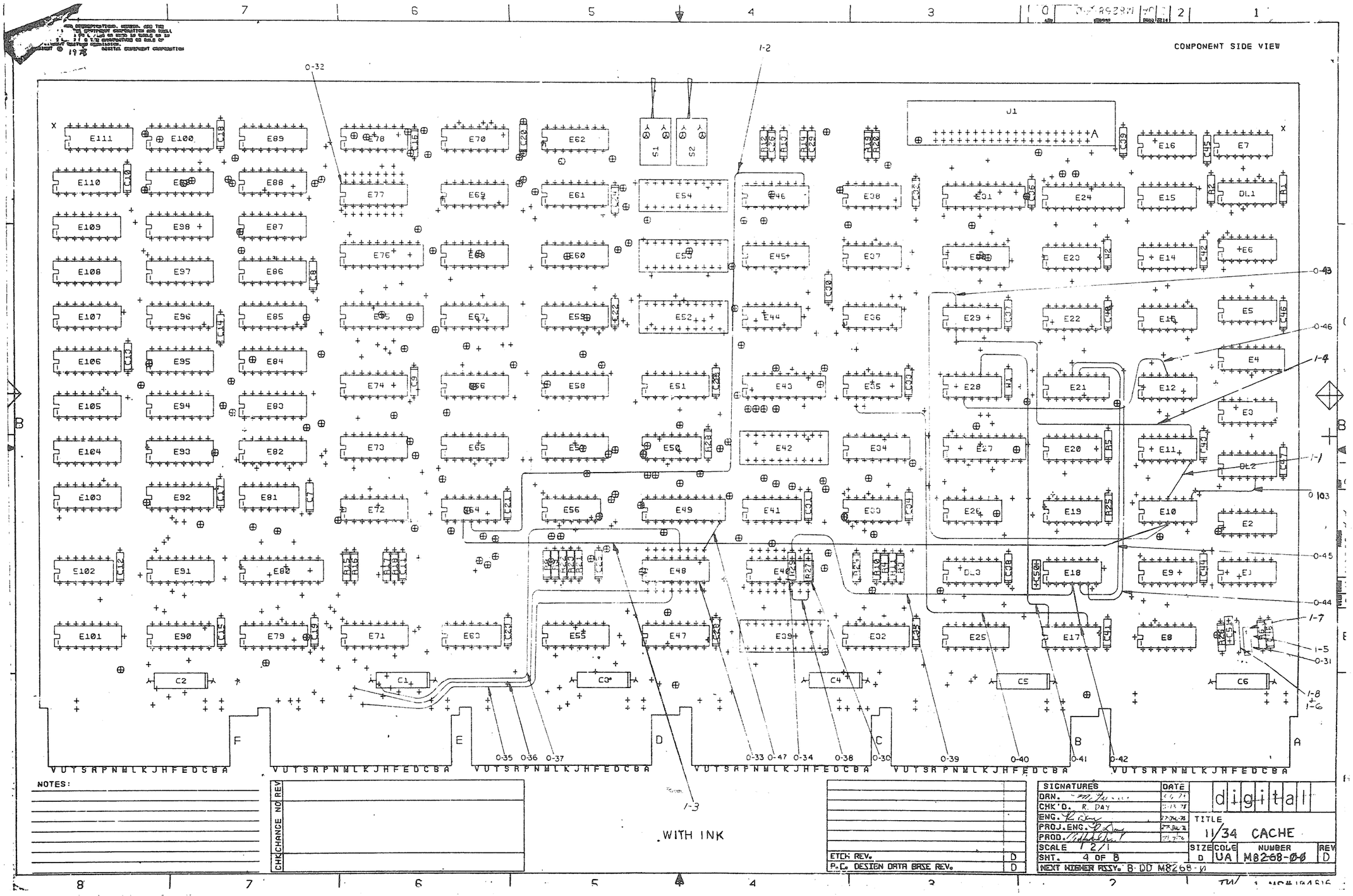
COMPONENT SIDE VIEW
WITH INK
NOTES:
CHK CHANGE NO REV
ETCH REV. D
P.C. DESIGN DATA BASE REV. D
SIGNATURES DATE
DRN.
CHK'D. R. DAY
ENG.
PROJ. ENG.
PROD.
SCALE 1/2/1
SHT. 4 OF 8
NEXT HIGHER ASSY. 8-DD M8268-0
digital
TITLE 11/34 CACHE
SIZE D
CODE UA
NUMBER M8268-00
REV D

M8268
5012524D

COPPER INK REV A-P2

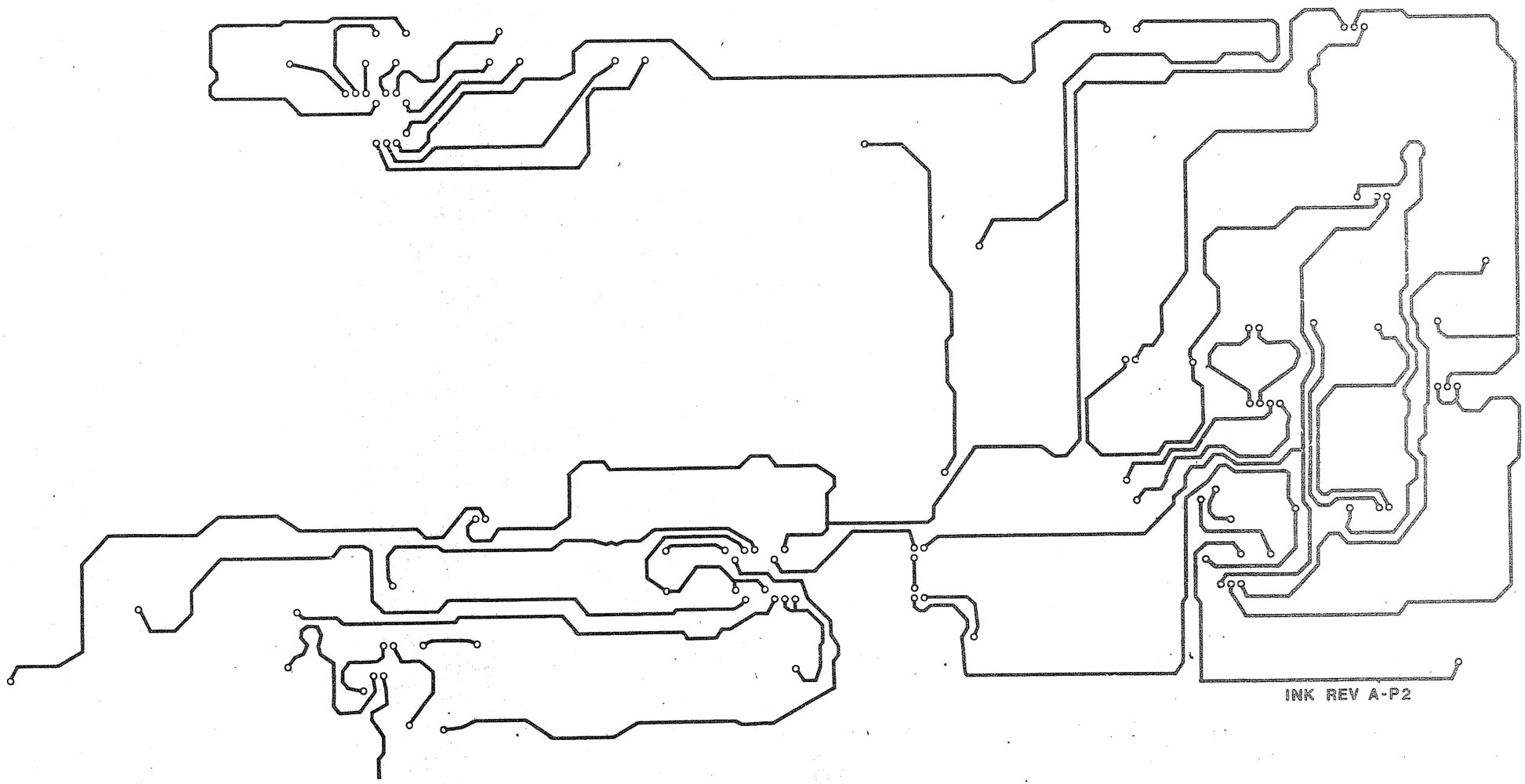

INK REV A-P2

REVISIONS		
CHK	CHANGE NO	EFF

TITLE	SIZE	CODE	NUMBER	REV.
11/34 CACHE	D	UA	M8268-0-0	D
SCALE 2/1	SHEET 5 OF 8		DIST.	

12

"THIS DRAWING AND SPECIFICATIONS, HEREIN, ARE THE PROPERTY OF DIGITAL EQUIPMENT CORPORATION AND SHALL NOT BE REPRODUCED OR COPIED OR USED IN WHOLE OR IN PART AS THE BASIS FOR THE MANUFACTURE OR SALE OF ITEMS WITHOUT WRITTEN PERMISSION
COPYRIGHT © DIGITAL EQUIPMENT CORPORATION"

L1

M8268 5012524D

LAYER 1

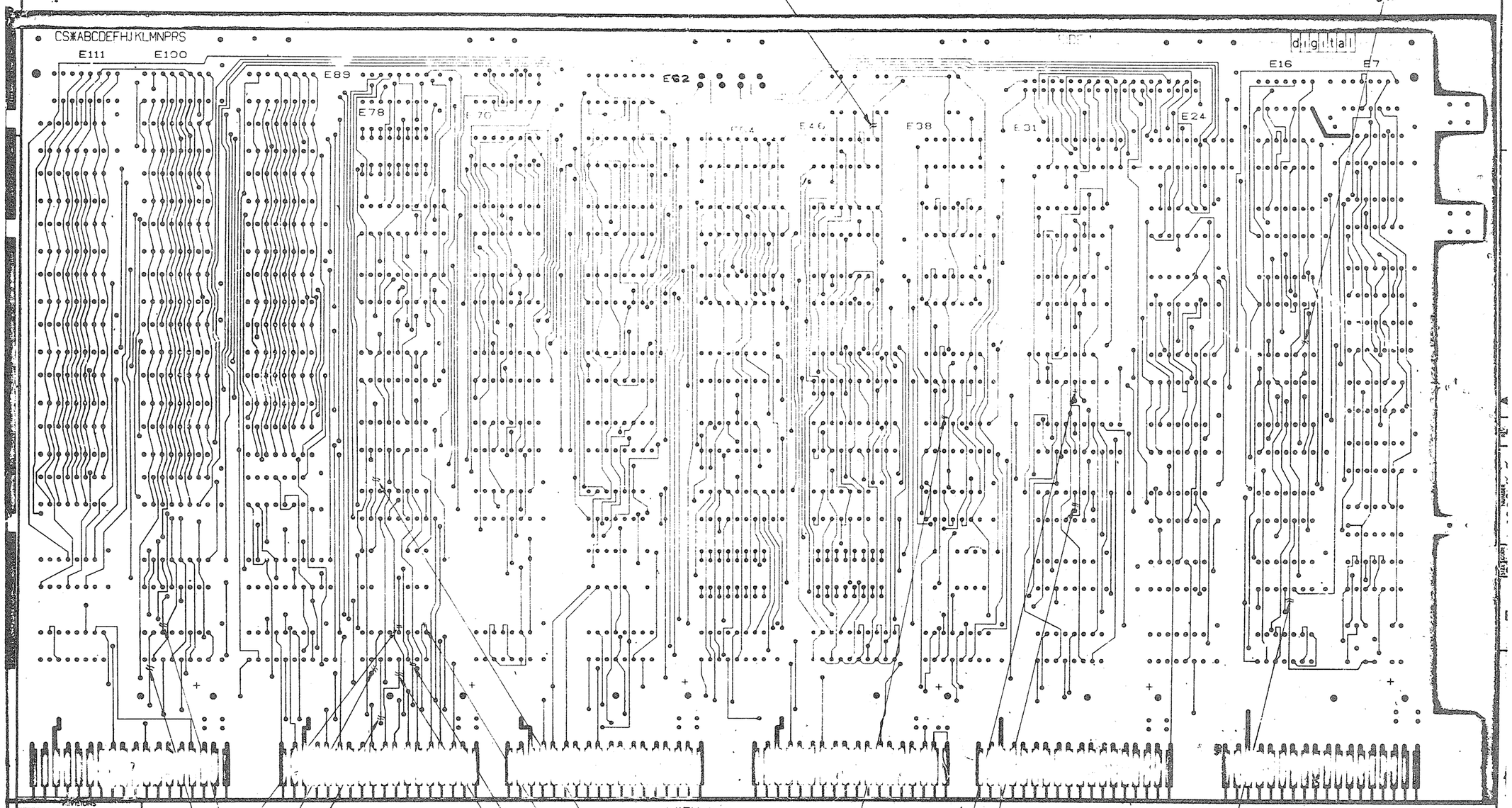

CHK	CHANGE NO.	REV.

TITLE 11/34 CACHE

SIZE D CODE UA NUMBER M8268-0-0 REV. D

SCALE 2 – 1 SHEET 6 OF 8 DIST.

TW

13

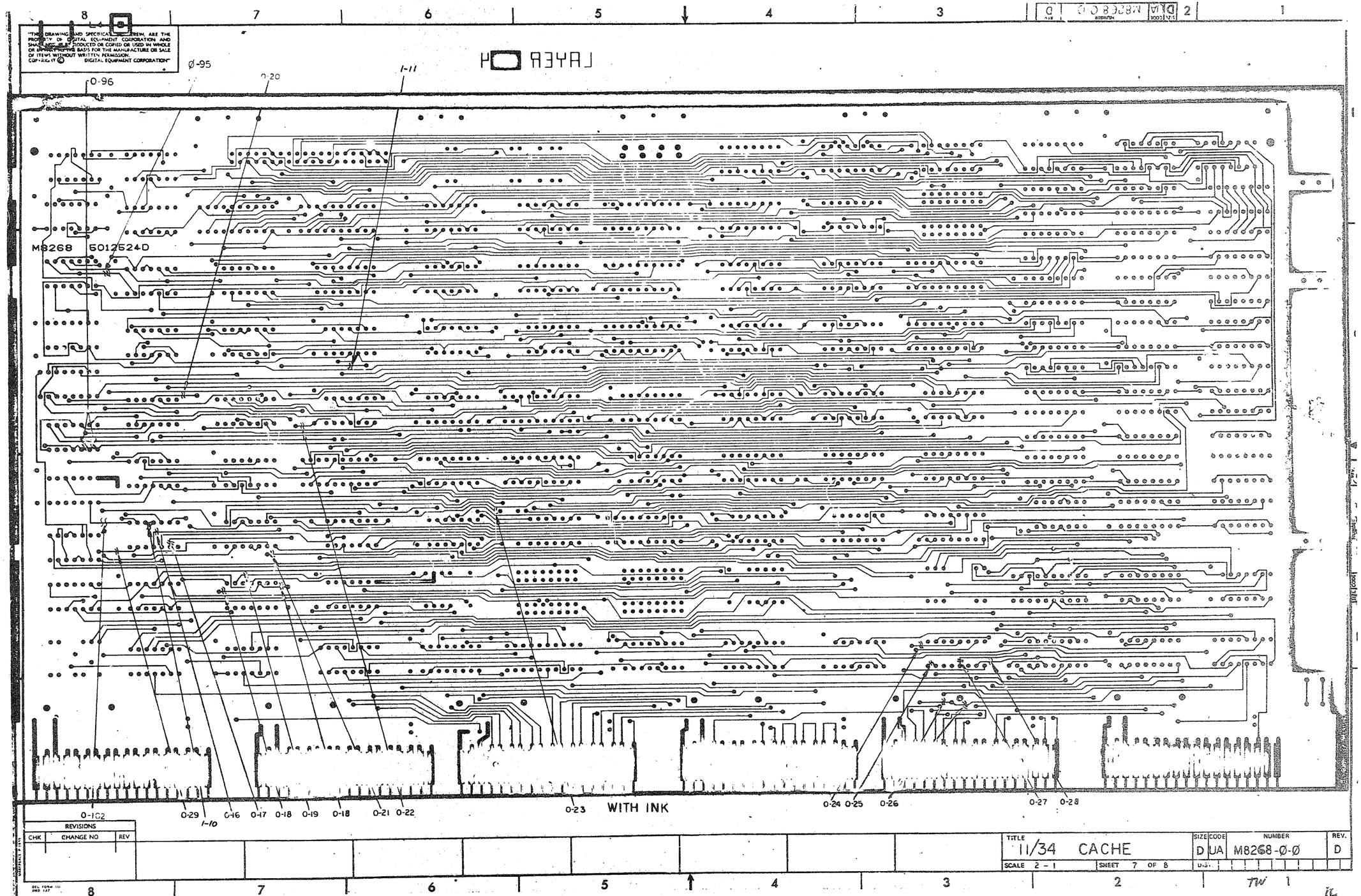
"THIS DRAWING AND SPECIFICATIONS, OR THEM, ARE THE PROPERTY OF DIGITAL EQUIPMENT CORPORATION AND SHALL NOT BE REPRODUCED OR COPIED OR USED IN WHOLE OR IN PART AS THE BASIS FOR THE MANUFACTURE OR SALE OF ITEMS WITHOUT WRITTEN PERMISSION.
COPYRIGHT © DIGITAL EQUIPMENT CORPORATION"
LAYER 04
0-96
Ø-95
0-20
1-11
M8268 5012524D
0-102
0-29
1-10
0-16
0-17
0-18
0-19
0-18
0-21
0-22
0-23
WITH INK
0-24
0-25
0-26
0-27
0-28
REVISIONS
CHK
CHANGE NO
REV
TITLE
11/34 CACHE
SIZE D
CODE UA
NUMBER M8268-Ø-Ø
REV. D
SCALE 2 - 1
SHEET 7 OF 8
TW 1

"THIS DRAWING AND SPECIFICATIONS, HEREIN, ARE THE PROPERTY OF DIGITAL EQUIPMENT CORPORATION AND SHALL NOT BE REPRODUCED OR COPIED OR USED IN WHOLE OR IN PART AS THE BASIS FOR THE MANUFACTURE OR SALE OF ITEMS WITHOUT WRITTEN PERMISSION. COPYRIGHT © DIGITAL EQUIPMENT CORPORATION"

FIRST RELEASE REWORK INSTRUCTIONS WITHOUT INK

ETCH CUTS SIDE 1:
0-1 E9Ø-15 BELOW E90-1 & 2
0-2 AT E9Ø-14
0-3 AT E71-12
0-4 E71-14 AT F/T BELOW E71-2
0-5 E71-3 AT F/T
0-6 AT E71-5
0-7 E71-11 BELOW E71-6 & 7
0-8 BETWEEN E71-8 & 9 ABOVE E71-9
0-9 E72-2 ABOVE E72-14 & 15
0-10 AT E28-5
0-11 AT E34-14
0-12 E1Ø-5 BELOW E9-4 & 5
0-13 E12-1Ø ABOVE E12-9
ETCH CUTS SIDE 2:
0-15 CUT ETCH ABOVE E26-7, CONNECTED TO E26-10 ON SIDE 1
0-16 AT E1Ø-4
0-17 AT E1Ø-2
0-18 AT E18-12 (2 PLACES)
0-19 AT E18-9
0-20 AT E12-11
0-21 AT F/T BELOW E19-2
0-22 AT E1Ø-6
0-23 AT F/T ABOVE & BETWEEN E41 & E33
0-24 AT E71-13
0-25 BETWEEN E71-7 & 8
0-26 AT F/T TO LEFT OF RIGHT LEAD OF C1 (2 PLACES)
0-27 AT E3-2 (2 PLACES)
0-28 AT E71-4
0-29 AT E71-2
0-30 AT E14-6

COMPONENT ADDS SIDE 1:
~~0-31 ADD DIODE (D1 1105275-00) NEXT TO R7 CATHODE DOWN WRAP D1 LEADS 270° AROUND R7 LEADS FOR MECHANICAL RIGIDITY (SEE VIEW A-A)~~
0-32 ADD IC (1300005-01) AT E77 PIN 1 IN HOLE 1
0-33 ADD IC (1911579) AT E48
0-34 ADD 1K RES (R29 1300365) AT E40-6 & 11
0-35 ADD 1K RES (R27 1300365) AT E40-8 & 9
WIRE ADDS SIDE 1:
0-36 E71-4 TO EK1
0-37 E71-12 TO F/T UNDER C1
0-38 E71-9 TO E63-14
0-39 E48-4 OUTSIDE HOLE TO F/T CONNECTED TO EK2
0-40 E48-1 OUTSIDE HOLE TO F/T CONNECTED TO EL1
0-41 E48-12 OUTSIDE HOLE TO F/T CONNECTED TO EJ1
0-42 E48-6 OUTSIDE HOLE TO F/T BELOW E8Ø-8
0-43 E48-16 OUTSIDE HOLE TO C25 TOP LEAD
0-44 E48-2 OUTSIDE HOLE TO E48-14 OUTSIDE HOLE
0-45 E48-2 OUTSIDE HOLE TO E48-5 OUTSIDE HOLE
0-46 E47-8 TO E48-8 OUTSIDE HOLE
0-47 E48-8 OUTSIDE HOLE E48-7 OUTSIDE HOLE
0-48 E48-11 OUTSIDE HOLE TO C5Ø TOP END
0-49 E4Ø-6 OUTSIDE HOLE TO E4Ø-8 OUTSIDE HOLE
0-50 E64-1 TO E48-1Ø OUTSIDE HOLE
0-51 E48-13 OUTSIDE HOLE TO F/T LEFT OF R17
0-52 E32-16 TO E4Ø-8 OUTSIDE HOLE
0-53 E48-3 OUTSIDE HOLE TO F/T BELOW E91-3 & 4
0-54 E17-9 TO F/T BELOW E35-2
0-55 E18-4 TO E4Ø-11 OUTSIDE HOLE
0-56 E18-1 TO E4Ø-9 OUTSIDE HOLE
0-57 E17-14 TO E28-1Ø
0-58 E17-1Ø TO E18-4
0-59 F/T BELOW E19-2 TO F/T BELOW E19-14
0-60 E18-9 TO E28-4
0-61 R7 BOTTOM LEAD TO E18-12
0-62 E1Ø1-2 TO E64-2
0-63 C5Ø TOP LEAD TO R25 BOTTOM LEAD
0-64 E1Ø-5 TO F/T LEFT OF E12-14
0-65 E3-1 TO E18-2
0-66 E3-1 TO E3-3
0-67 E3-2 TO E4-1
0-68 E12-1Ø TO E1Ø-6
0-69 E5-6 TO E18-3
0-70 E14-6 TO E18-1
0-71 E14-5 TO E28-4
0-72 E14-3 TO E1Ø-2
0-73 E4-1 TO E16-12
0-74 E16-11 TO E28-5
0-75 E16-13 TO E48-1Ø OUTSIDE HOLE
0-76 E21-13 TO E2Ø-11
0-77 E21-12 TO E2Ø-10
0-79 E77-4 OUTSIDE HOLE TO E62-6
0-80 E77-5 OUTSIDE HOLE TO E62-3
0-81 E77-6 OUTSIDE HOLE TO E7Ø-1Ø
0-82 E77-7 OUTSIDE HOLE TO E7Ø-6
0-83 E77-8 OUTSIDE HOLE TO E7Ø-3
0-84 E77-9 OUTSIDE HOLE TO E7Ø-13
0-85 E77-1Ø OUTSIDE HOLE TO E78-6
0-86 E77-12 OUTSIDE HOLE TO E78-3
0-87 E77-11 OUTSIDE HOLE TO E78-1Ø
0-88 E77-13 OUTSIDE HOLE TO E78-13
0-89 E77-14 OUTSIDE HOLE TO E89-8
0-90 E48-15 OUTSIDE HOLE TO F/T LEFT OF E63-14
0-91 E1Ø-3 TO E2Ø-8
0-92 E48-14 TO C25 LOWER LEAD
0-93 F/T BELOW E46-3 TO F/T TO RIGHT OF C31 TOP LEAD
0-94 E48-9 OUTSIDE HOLE TO E19-1Ø
0-95 E18-5 TO E21-12
0-96 E18-6 TO E21-13
0-97 E21-11 TO E28-3
0-98 E1Ø-4 TO E29-13
0-99 E71-3 TO E8Ø-7
0-100 E71-13 TO F/T BELOW E71-2
WIRE ADDS SIDE 2:
0-101 E36-13 TO J1-EE

FIRST RELEASE REWORK INSTRUCTIONS WITH INK

ETCH CUTS SIDE 1:
0-1 E9Ø-15 BELOW E90-1 & 2
0-2 AT E9Ø-14
0-3 AT E71-12
0-4 E71-14 AT F/T BELOW E71-2
0-5 E71-3 AT F/T
0-6 AT E71-5
0-7 E71-11 BELOW E71-6 & 7
0-8 BETWEEN E71-8 & 9 ABOVE E71-9
0-9 E72-2 ABOVE E72-14 & 15
0-10 AT E28-5
0-11 AT E26-1Ø UNDER E26
0-12 E10-5 BELOW E9-4 & 5
0-13 E12-1Ø ABOVE E12-9
0-15 AT E34-14
ETCH CUTS SIDE 2:
0-16 AT E1Ø-4
0-17 AT E1Ø-2
0-18 AT E18-12 (2 PLACES)
0-19 AT E18-9
0-20 AT E12-11
0-21 AT F/T BELOW E19-2
0-22 BETWEEN W1-BOTTOM SIDE & F/T TO THE LEFT
0-23 AT F/T ABOVE & BETWEEN E41 & E33
0-24 AT E71-13
0-25 BETWEEN E71-7 & 8
0-26 AT F/T TO THE LEFT OF THE RIGHT LEAD OF C1 (2 PLACES)
0-27 AT E71-4
0-28 AT E71-2
0-29 AT E1Ø-6
COMPONENT ADDS SIDE 1:
0-30 ADD 1K RES (R27 1300365) AT E4Ø-8 & 9
0-31 ~~ADD DIODE (D1 1105275-00) NEXT TO R7 CATHODE DOWN WRAP D1 LEADS 270° AROUND R7 LEADS FOR MECHANICAL RIGIDITY (SEE VIEW A-A)~~
0-32 ADD IC (1300005-01) AT E77-1 IN HOLE 1
0-33 ADD IC (1911579) AT E48
0-34 ADD 1K RES (R29 1300365) AT E40-6 & 11
WIRE ADDS SIDE 1:
0-35 E48-4 OUTSIDE HOLE TO F/T CONNECTED TO EK2
0-36 E48-1 OUTSIDE HOLE TO F/T CONNECTED TO EL2
0-37 E48-12 OUTSIDE HOLE TO F/T CONNECTED TO EJ1
0-38 E4Ø-6 OUTSIDE HOLE TO E4Ø-8 OUTSIDE HOLE
0-39 E4Ø-11 OUTSIDE HOLE TO E18-4
0-40 E17-9 TO F/T BELOW E35-2
0-41 E17-14 TO E28-1Ø
0-42 E17-1Ø TO E18-4
0-43 E1Ø-4 TO E29-13
0-44 E18-6 TO E21-13
0-45 E18-5 TO E21-12
0-46 E12-11 TO E28-3
0-47 E49-1Ø TO E48-9 OUTSIDE HOLE

ADDITIONAL REWORK INSTRUCTIONS WITH OR WITHOUT INK

ETCH CUTS SIDE 2
0-102 E1Ø-8 TO DL2-2
WIRE ADDS SIDE 1
0-103 E1Ø-8 TO DL2-5

FIRST RELEASE REWORK WITH INK CONT.

ETCH CUTS SIDE 2:
0-95 E6-8 TO E14-6
0-96 BETWEEN E3-1 & 2 AND-2 & 3

REWORK INSTRUCTION WITH OR WITHOUT INK ECO #1.

WIRE ADDS
1-1 E10-11 TO E11-7
1-2 E46-9 TO E64-4
1-3 E64-3 TO E10-4
1-4 E29-2 TO E11-8
COMPONET DELETES
1-5 D1
1-6 R7
1-7 C49
COMPONET ADDS
1-8 ADD JUMPER WIRE IN PLACE OF R7.

ETCH CUTS SIDE 2
1-9 AT E46-9
ETCH CUTS SIDE 2
1-10 BETWEEN E10-11 AND E10-10.
1-11. AFTER THE FEED THRU CONNECTED TO E29-2.

REVISIONS		
CHK	CHANGE NO.	REV.

TITLE	SIZE	CODE	NUMBER	REV.
11/34 CACHE	D	UA	M8268-Ø-Ø	D
SCALE —	SHEET 8 OF 8	DIST.		

P A R T S L I S T

LINE	ITEM	DOCUMENT NUMBER	PART NUMBER	DESCRIPTION	QTY	REFERENCE DESIGNATOR
1	1	D-MD-5012524-0-0	5012524-00	M8268	1	
2	2		1000076-00	39 MFD 10V 10% 150D S.TA	6	C1-C6
3	3		1012784-00	.047 MFD 50V -20+80 CER	42	C7-C48
4	4		1012121-00	220.0 MMF 100V 1%200PPM DM15S	1	C51
5	5		1000024-00	470.0 MMF 100V 5%200PPM DM15S	1	C50
6	6		1213506-01	HEADER 40POS RT ANGLE W/3 SI	1	J1
7	7		1210711-09	/OBSOLETE	1	
8	8		1210209-00	SW,TOG 1P.01A SUBMINI	2	S1,S2
9	9		1300271-00	220 1/4W 5% CC	6	R1,R2,R5,R6,R10,R11
10	10		1300202-00	47 1/4W 5% CC	1	R26
11	11		1300365-00	1 K 1/4W 5% CC	15	R8,R9,R12-R20,R24,R27,R28,R29
12	12		1311422-00	178 1/4W 1% RN55D-F 100PPM	3	R3,R21,R22
13	13		1305125-00	383 1/4W 1% RN55D-F 100PPM	2	R4,R23
14	14		1300250-00	150 1/4W 5% CC	1	R25
15	16		1612463-00	DELAY= 150NS,10TAPS	3	DL1,DL2,DL3
16	17		1910532-00	74S00 NAND GATE-QUAD 2IN8	2	E15,E37
17	18		1912799-00	LS00 NAND-GATE-QUAD 2IN,P	5	E2,E7,E19,E22,E33
18	19		1912801-00	LS02 NOR-GATE-QUAD 2IN	2	E14,E35
19	20		1912388-00	74S02 NOR GATE-QUAD 2IN,PO	1	E10
20	21		1910534-00	74S04 INVERTER GATE-HEX 1I	2	E11,E64
21	22		1912803-00	LS04 INVERTER GATE-HEX 1I	3	E6,E12,E26
22	23		1910536-00	74S10 NAND GATE-TRIPLE 3IN	2	E8,E20
23	24		1912807-00	LS10 NAND GATE-TRIPLE 3IN	1	E28
24	25		1912808-00	LS11 AND GATE-TRIPLE 3IN	1	E29
25	26		1912815-00	LS30 NAND GATE-SINGLE 8IN	1	E81
26	27		1913340-00	74S32 OR GATE-QUAD 2IN	1	E16
27	28		1912813-00	LS27 NOR GATE-TRIPLE 3IN	1	E3
28	29		1912824-00	LS74 FF-D DUAL,EDGE TRIGG	4	E1,E9,E36,E41
29	30		1910544-00	74S74 FF-D DUAL,EDGE TRIGG	2	E5,E13
30	31		1912089-00	74S85 CMPRTR-4BIT MAGNITUD	2	E45,E74

REVISION HISTORY		
ENG	ECO NUMBER	REV
---	INIT	C
RD	TW001	D

SECTION 1 OF 1

SECTION, VARIATION INDEX

1.00
2.
3.
4.
5.
6.
7.
8.
9.
10.
11.
12.

RESP.ENG.: ROGER DAY — DATE: 20-MAR-78

MADE BY: MIKE FUNARO — DATE: 20-MAR-78

CHECKED: ROGER DAY — DATE: 20-MAR-78

DSN.ENG.: ROGER DAY — DATE: 20-MAR-78

PROD.: BOB KING — DATE: 20-MAR-78

ASSEMBLY NUMBER: D-UA-M8268-0-0

D I G I T A L

TITLE PARTS LIST

11/34 CACHE

SIZE	CODE	DOCUMENT NUMBER	REV
K	PL	M8268-0-DBP	D

EDIT # 20

PART NUMBER: M8268-00

"THIS DRAWING AND SPECIFICATIONS HEREIN, ARE THE PROPERTY OF DIGITAL EQUIPMENT CORPORATION AND SHALL NOT BE REPRODUCED OR COPIED OR USED IN WHOLE OR IN PART AS THE BASIS FOR THE MANUFACTURE OR SALE OF ITEMS WITHOUT WRITTEN PERMISSION. COPYRIGHT 1979, DIGITAL EQUIPMENT CORPORATION "

P A R T S L I S T

LINE	ITEM	DOCUMENT NUMBER	PART NUMBER	DESCRIPTION	QTY	REFERENCE DESIGNATOR
31	32		1911983-00	74S133 NAND GATE-POSITIVE 1	1	E21
32	33		1912839-00	LS133 NAND GATE-POS	1	E91
33	34		1910548-00	74S157 MUX 1 OF 2 (QUAD)	9	E58-E60,E62,E66-E68,E70,E78
34	35		1912847-00	LS157 MUX 1 OF 2(QUAD)	1	E4
35	36		1912842-00	LS138 DECODER-THREE INPUT,	1	E73
36	37		1912697-00	LS174 FF-D HEX W/CLEAR	1	E46
37	38		1912853-00	LS175 FF-D QUAD	2	E30,E34
38	39		1912854-00	LS193 COUNTER,SYNCHR,4BIT,	3	E51,E57,E65
39	40		1915193-00	LS244 DRIVER,LINE,OCTAL,T	5	E39,E42,E52-E54
40	41		1911573-00	74S280 PARITY GEN/CHKR,9BIT	6	E23,E38,E44,E56,E50,E102
41	42		1913670-00	74S373 LATCH 8BIT TRASP TR	5	E24,E31,E75,E76,E80
42	43		1913671-00	74S374 FF-D OCTAL TRISTATE	3	E27,E49,E43
43	44		1911469-00	DEC 8640 RECEIVER,BUS,QUAD,U	1	E17
44	45		1911579-00	8641 TRANSCEIVER,BUS,QUA	6	E25,E32,E47,E55,E71,E48
45	46		1911116-00	DEC 8837 RECEIVER,BUS,HEX,UN	3	E72,E79,E90
46	47		1909705-00	DEC 8881 NAND GATE-QUAD 2IN O	2	E18,E63
47	48	SEE NOTE 1	1914438-00	DC 013 UNIBUS INTERRRUPT-BIP	1	E101
48	49		2115020-00	1K MOS RAM 25NS S	28	E61,E69,E82-E89,E92-E100,E103-E111
49	50		9000024-01	EYELET, ROLLED FLANGE, .121 OD X	11	
50	51		9009185-00	JUMPER, WIRE, INSULATED, BLACK B	2	W1,W2
51	54		1300005-01	R NETWORK 13-1K RESISTORS 5% DIP	1	E77

52 NOTE: #1 P/N 1912083-00 IS AN ALTERNATE PART FOR ITEM #48

D	I	G	I	T	A	L	TITLE	SECTION	SIZE	CODE	DOCUMENT NUMBER	REV
							11/34 CACHE	1 OF 1	K	PL	M8268-0-DBP	D

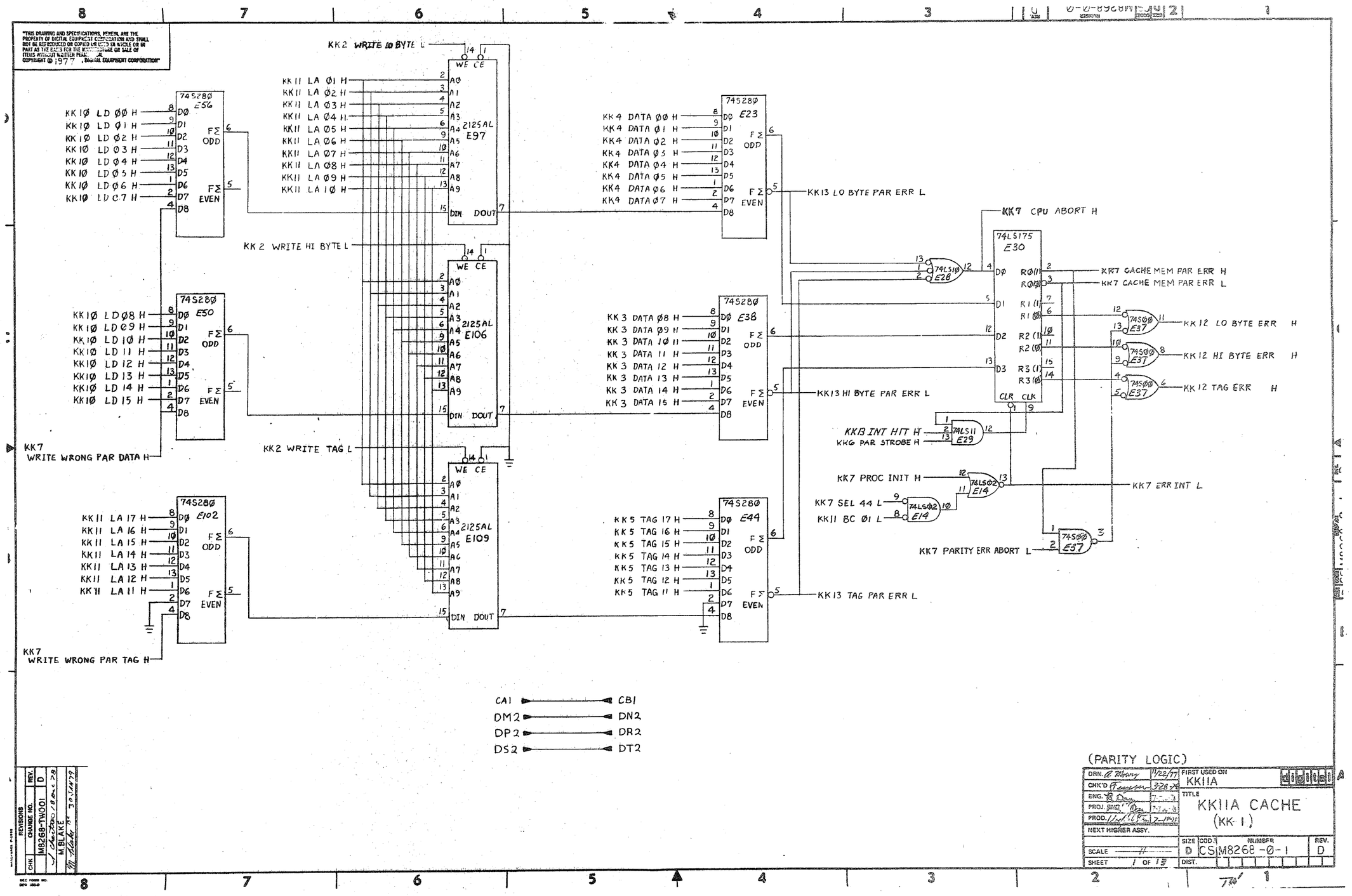

"THIS DRAWING AND SPECIFICATIONS, HEREIN, ARE THE PROPERTY OF DIGITAL EQUIPMENT CORPORATION AND SHALL NOT BE REPRODUCED OR COPIED OR USED IN WHOLE OR IN PART AS THE BASIS FOR THE MANUFACTURE OR SALE OF ITEMS WITHOUT WRITTEN PERMISSION. COPYRIGHT © 1977, DIGITAL EQUIPMENT CORPORATION"

"THIS DRAWING AND SPECIFICATIONS, HEREIN, ARE THE PROPERTY OF DIGITAL EQUIPMENT CORPORATION AND SHALL NOT BE REPRODUCED OR COPIED OR USED IN WHOLE OR IN PART AS THE BASIS FOR THE MANUFACTURE OR SALE OF ITEMS WITHOUT WRITTEN PERMISSION.
COPYRIGHT © 1977 DIGITAL EQUIPMENT CORPORATION"

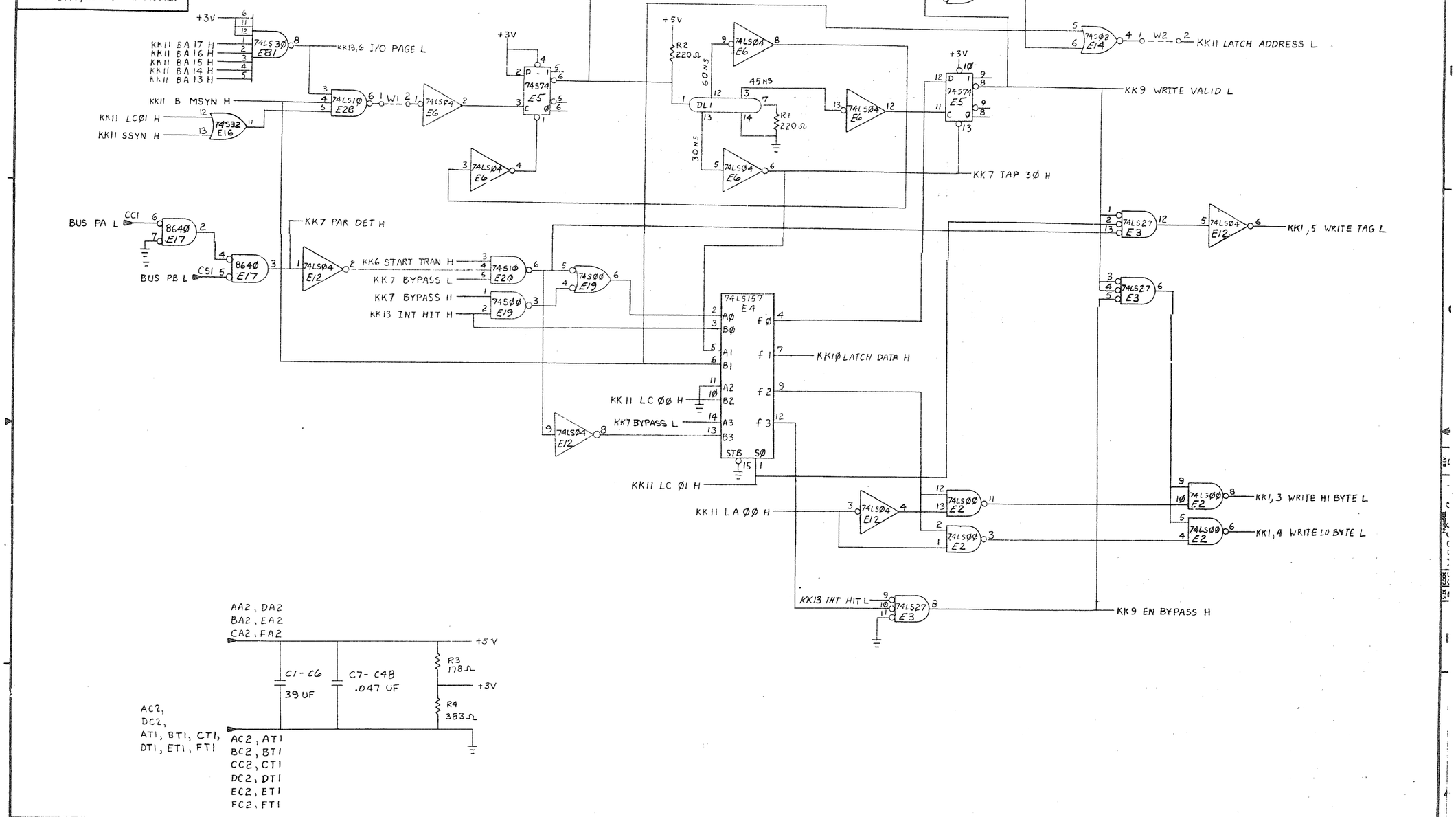

(WRITE CYCLE LOGIC)

REVISIONS		
CHK	CHANGE NO.	REV.

TITLE	SIZE	CODE	NUMBER	REV.
KK11A CACHE (KK2)	D	CS	M8268-0-1	D
SCALE — SHEET 2 OF 13	DIST 1			

19

"THIS DRAWING AND SPECIFICATIONS, MATERIAL ARE THE PROPERTY OF DIGITAL EQUIPMENT CORPORATION AND SHALL NOT BE REPRODUCED OR COPIED OR USED IN WHOLE OR IN PART AS THE BASIS FOR THE MANUFACTURE OR SALE OF ITEMS WITHOUT WRITTEN PERMISSION.
COPYRIGHT © 1977 "DIGITAL EQUIPMENT CORPORATION"

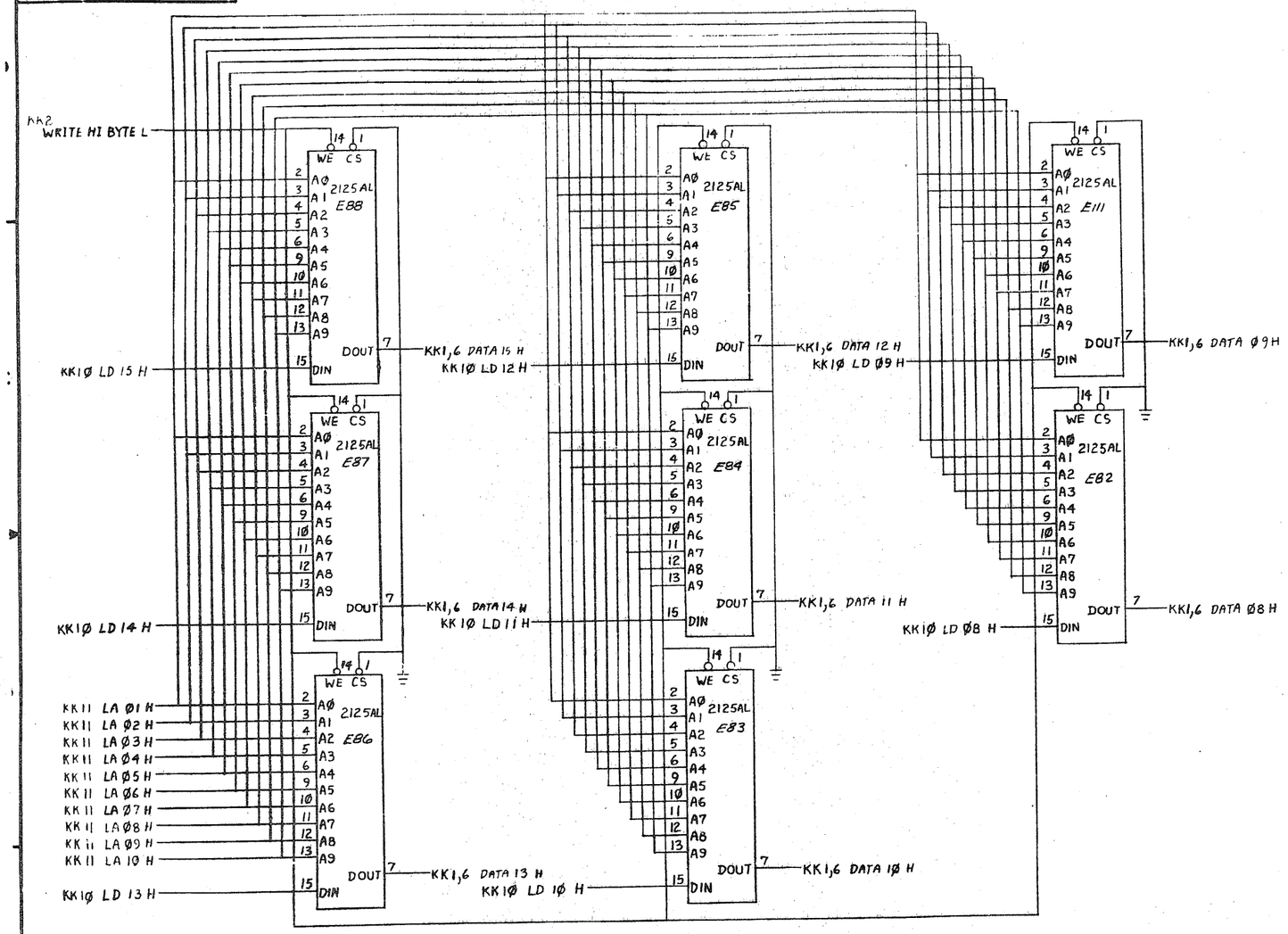

(DATA MEMORY ARRAY)

REVISIONS		
CHK	CHANGE NO.	REV.

TITLE KK11A CACHE (KK 3)

SIZE D CODE CS NUMBER M8268-Ø-1 REV. D

SCALE — SHEET 2 OF 18 DIST.

"THIS DRAWING AND SPECIFICATIONS, HEREIN, ARE THE PROPERTY OF DIGITAL EQUIPMENT CORPORATION AND SHALL NOT BE REPRODUCED OR COPIED OR USED IN WHOLE OR IN PART AS THE BASIS FOR THE MANUFACTURE OR SALE OF ITEMS WITHOUT WRITTEN PERMISSION. COPYRIGHT © 1977 DIGITAL EQUIPMENT CORPORATION"

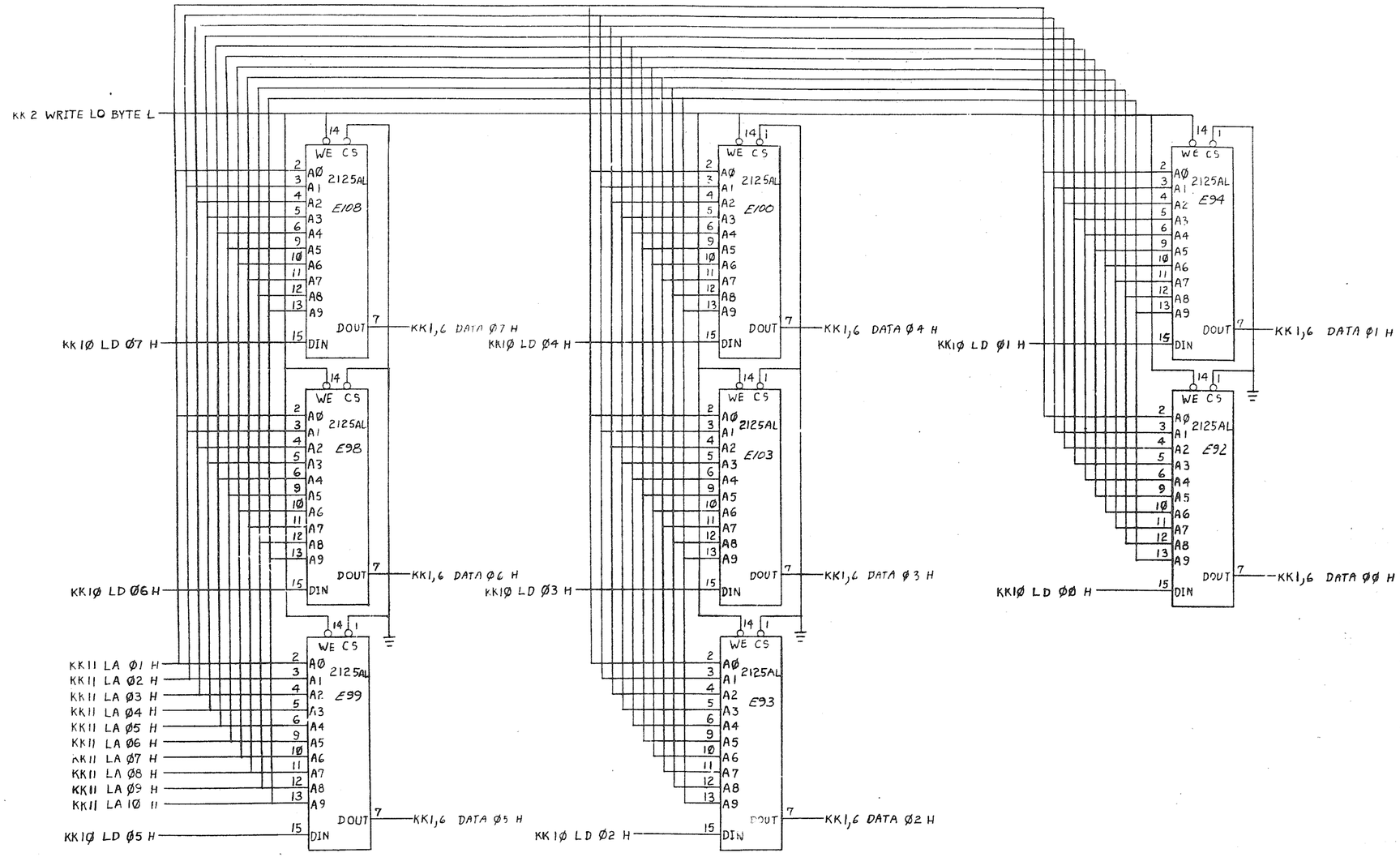

REVISIONS		
CHK	CHANGE NO.	REV.

(DATA MEMORY ARRAY)

TITLE	SIZE	CODE	NUMBER	REV.
KK11A CACHE (KK4)	D	CS	M8268-0-1	D
SCALE — // —	SHEET 4 OF 13	DIST.		

21

"THIS DRAWING AND SPECIFICATIONS, HEREIN, ARE THE PROPERTY OF DIGITAL EQUIPMENT CORPORATION AND SHALL NOT BE REPRODUCED OR COPIED OR USED IN WHOLE OR IN PART AS THE BASIS FOR THE MANUFACTURE OR SALE OF ITEMS WITHOUT WRITTEN PERMISSION. COPYRIGHT © 1977 DIGITAL EQUIPMENT CORPORATION"

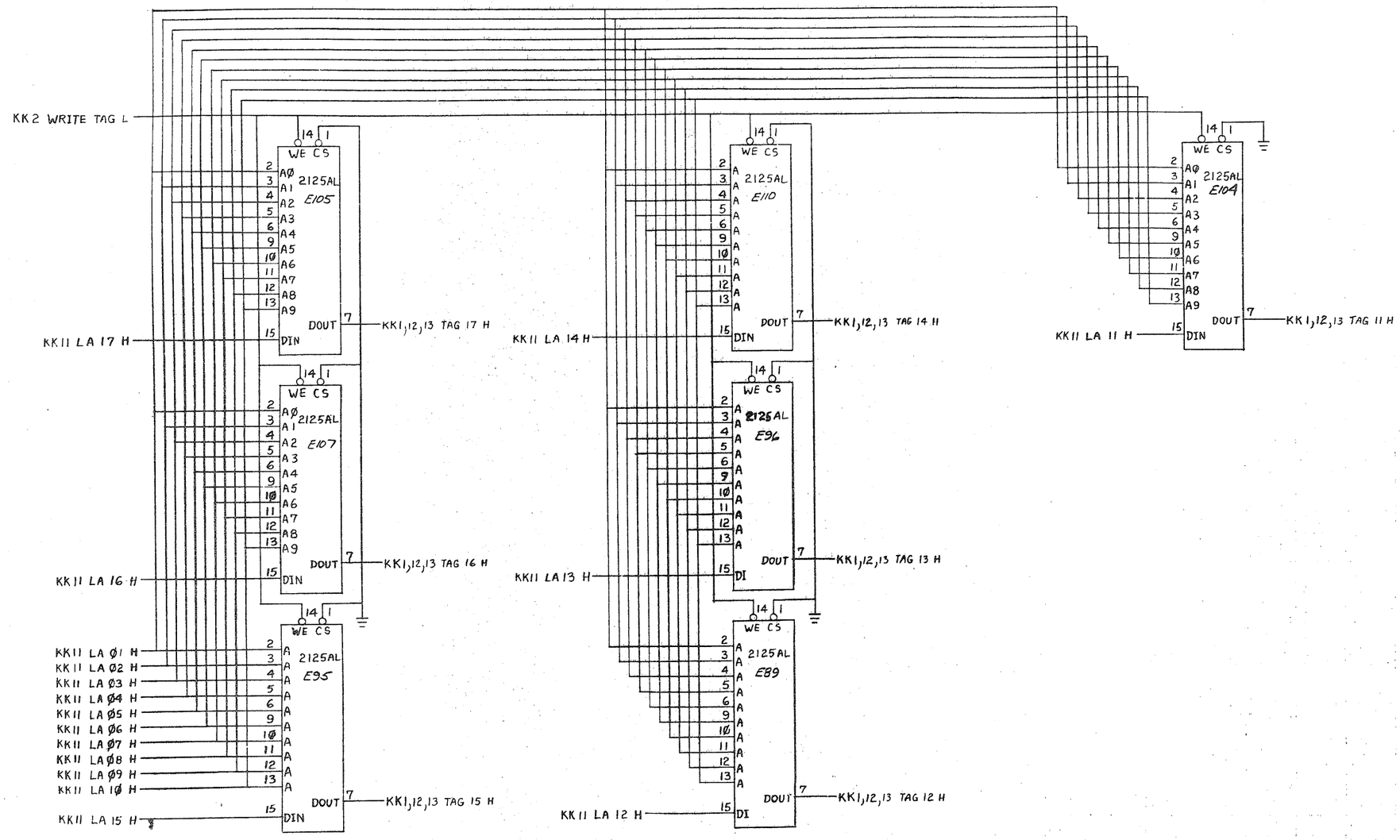

REVISIONS		
CHK	CHANGE NO.	REV.

(TAG STORE)

TITLE KK11A CACHE (KK5)

SIZE D CODE CS NUMBER M8268-0-1 REV. D

SCALE — SHEET 5 OF 13 DIST

TW

22

"THIS DRAWING AND SPECIFICATIONS, HEREIN, ARE THE PROPERTY OF DIGITAL EQUIPMENT CORPORATION AND SHALL NOT BE REPRODUCED OR COPIED OR USED IN WHOLE OR IN PART AS THE BASIS FOR THE MANUFACTURE OR SALE OF ITEMS WITHOUT WRITTEN PERMISSION. COPYRIGHT ©1977 DIGITAL EQUIPMENT CORPORATION"

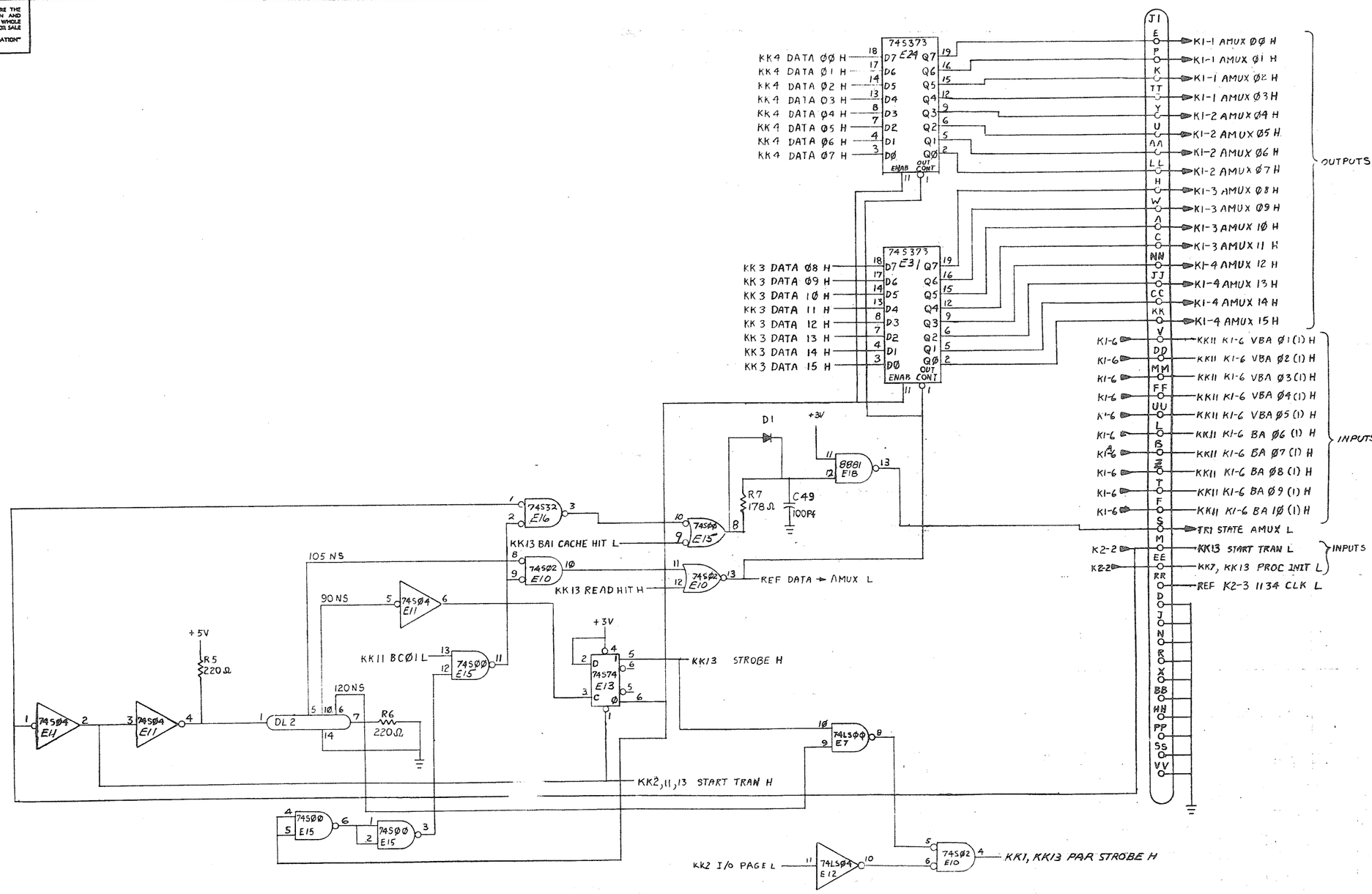

(AMUX BUFFERS, START TRAN LOGIC)

REVISIONS		
CHK	CHANGE NO.	REV.

TITLE KK 11A CACHE (KK-6) | SIZE D | CODE CS | NUMBER M8268-Ø-1 | REV. D

SCALE — | SHEET 6 OF 13 | DIST.

23

"THIS DRAWING AND SPECIFICATIONS, HEREIN, ARE THE PROPERTY OF DIGITAL EQUIPMENT CORPORATION AND SHALL NOT BE REPRODUCED OR COPIED OR USED IN WHOLE OR IN PART AS THE BASIS FOR THE MANUFACTURE OR SALE OF ITEMS WITHOUT WRITTEN PERMISSION. COPYRIGHT © 1977 DIGITAL EQUIPMENT CORPORATION"

* - 8647 IS ACCEPTABLE SUBSTITUTE

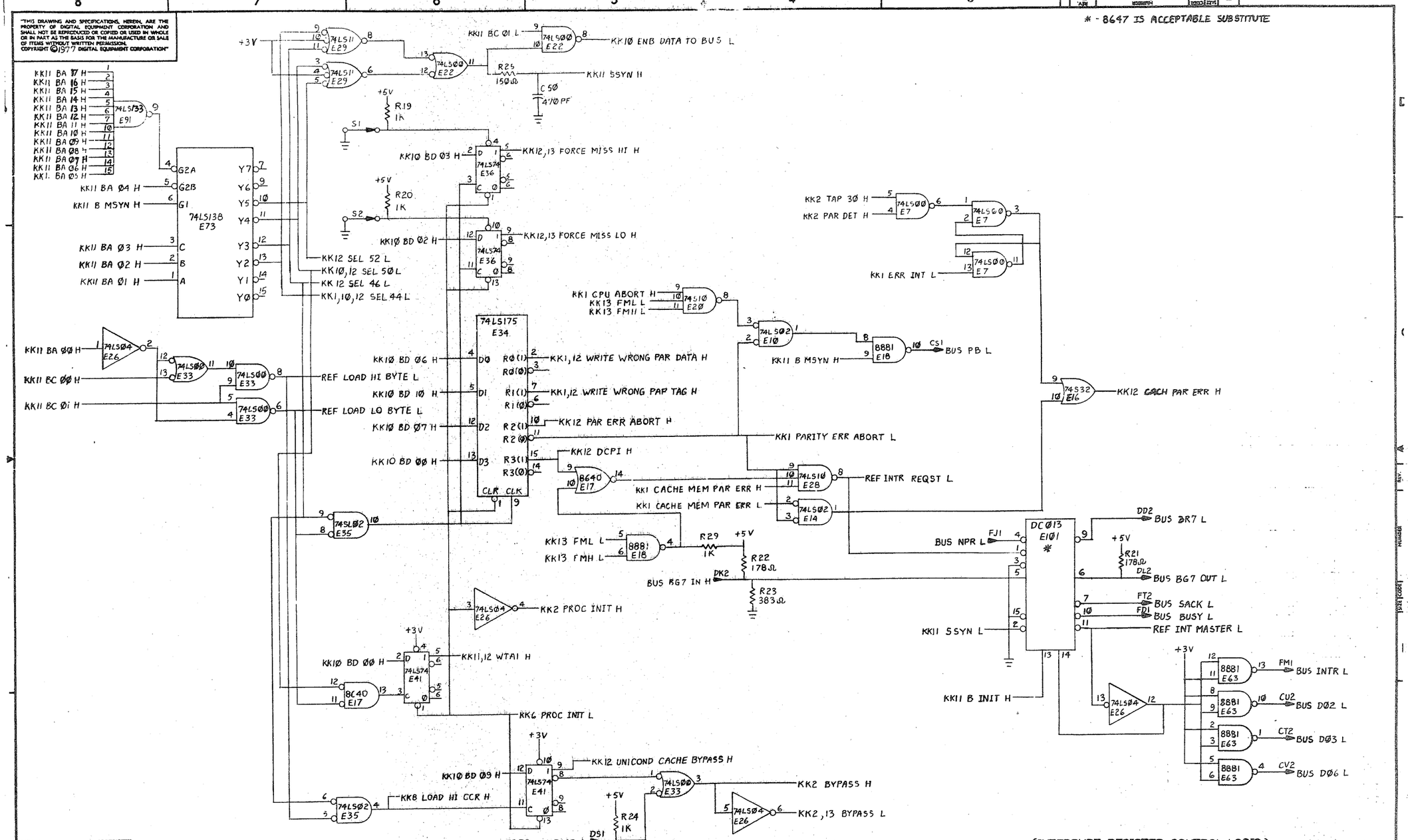

(INTERRUPT, REGISTER CONTROL LOGIC)

REVISIONS		
CHK	CHANGE NO.	REV.

TITLE	SIZE	CODE	NUMBER	REV.
KK11 A CACHE KK7	D	CS	M8268-0-1	D

SCALE — SHEET 7 OF 13

"THIS DRAWING AND SPECIFICATIONS, HEREIN, ARE THE PROPERTY OF DIGITAL EQUIPMENT CORPORATION AND SHALL NOT BE REPRODUCED OR COPIED OR USED IN WHOLE OR IN PART AS THE BASIS FOR THE MANUFACTURE OR SALE OF ITEMS WITHOUT WRITTEN PERMISSION. COPYRIGHT © 1977 DIGITAL EQUIPMENT CORPORATION"

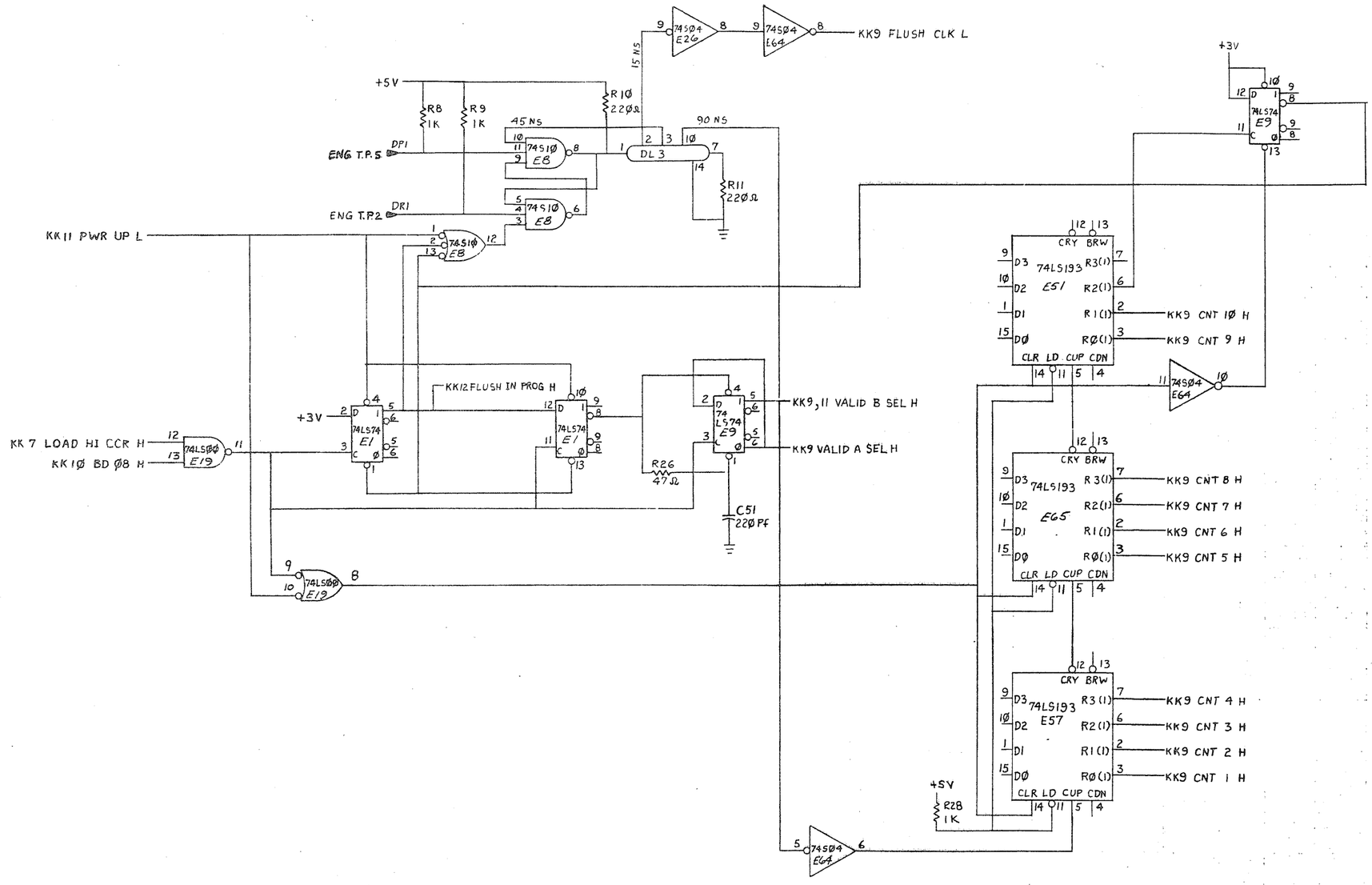

REVISIONS		
CHK	CHANGE NO.	REV.

(FLUSH COUNTER)

TITLE	SIZE	CODE	NUMBER	REV.
KK11A CACHE (KK8)	D	CS	M8268-0-1	D

SCALE — SHEET 8 OF 13 DIST.

25

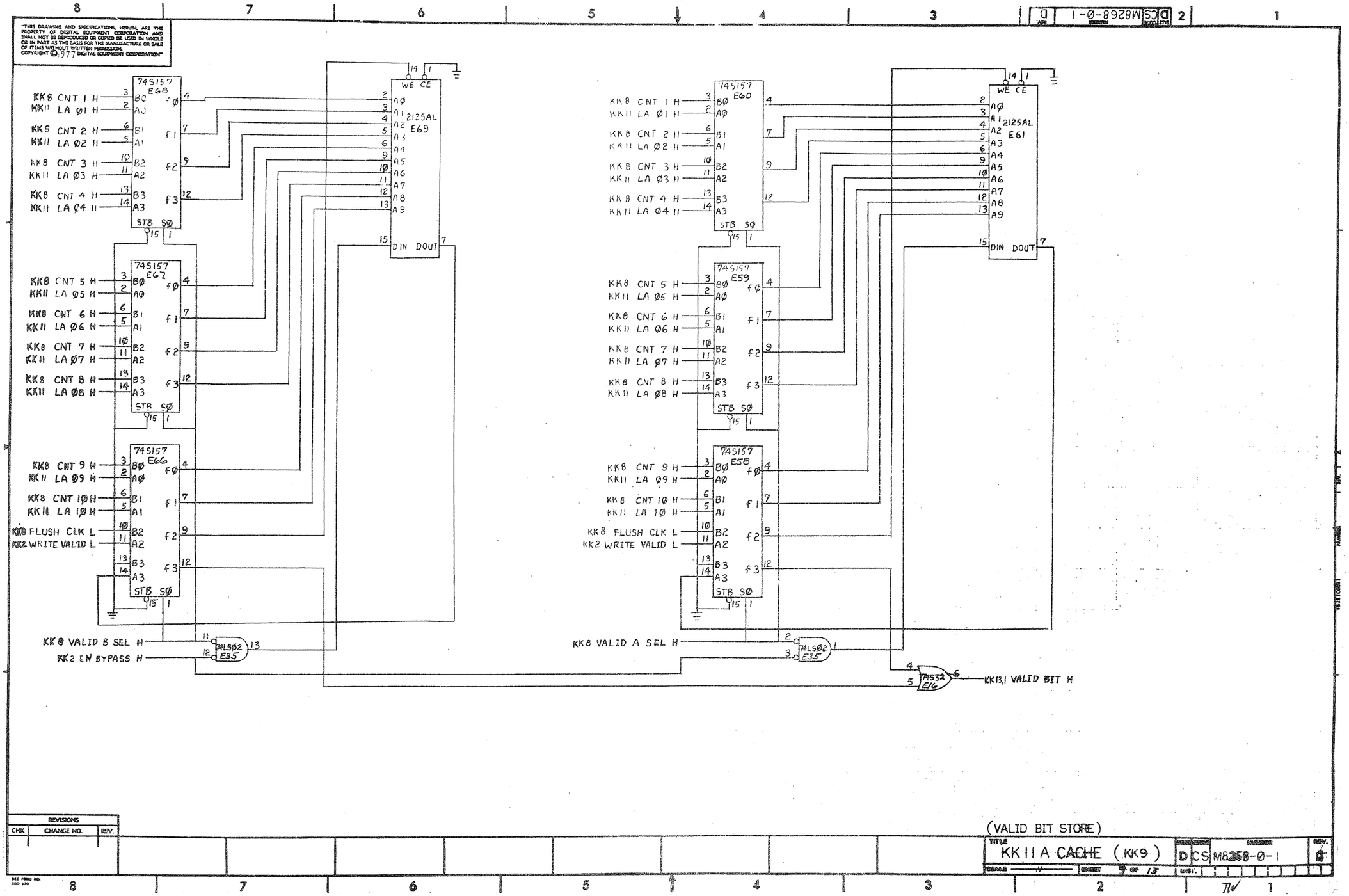

(VALID BIT STORE)

REVISIONS		
CHK	CHANGE NO.	REV.

TITLE KK11 A CACHE (KK9) | D | CS | M8268-0-1 | REV. 0

SCALE — | SHEET 9 OF 13

26

THIS DRAWING AND SPECIFICATIONS, HEREIN, ARE THE PROPERTY OF DIGITAL EQUIPMENT CORPORATION AND SHALL NOT BE REPRODUCED OR COPIED OR USED IN WHOLE OR IN PART AS THE BASIS FOR THE MANUFACTURE OR SALE OF ITEMS WITHOUT WRITTEN PERMISSION.
COPYRIGHT ©1977 DIGITAL EQUIPMENT CORPORATION

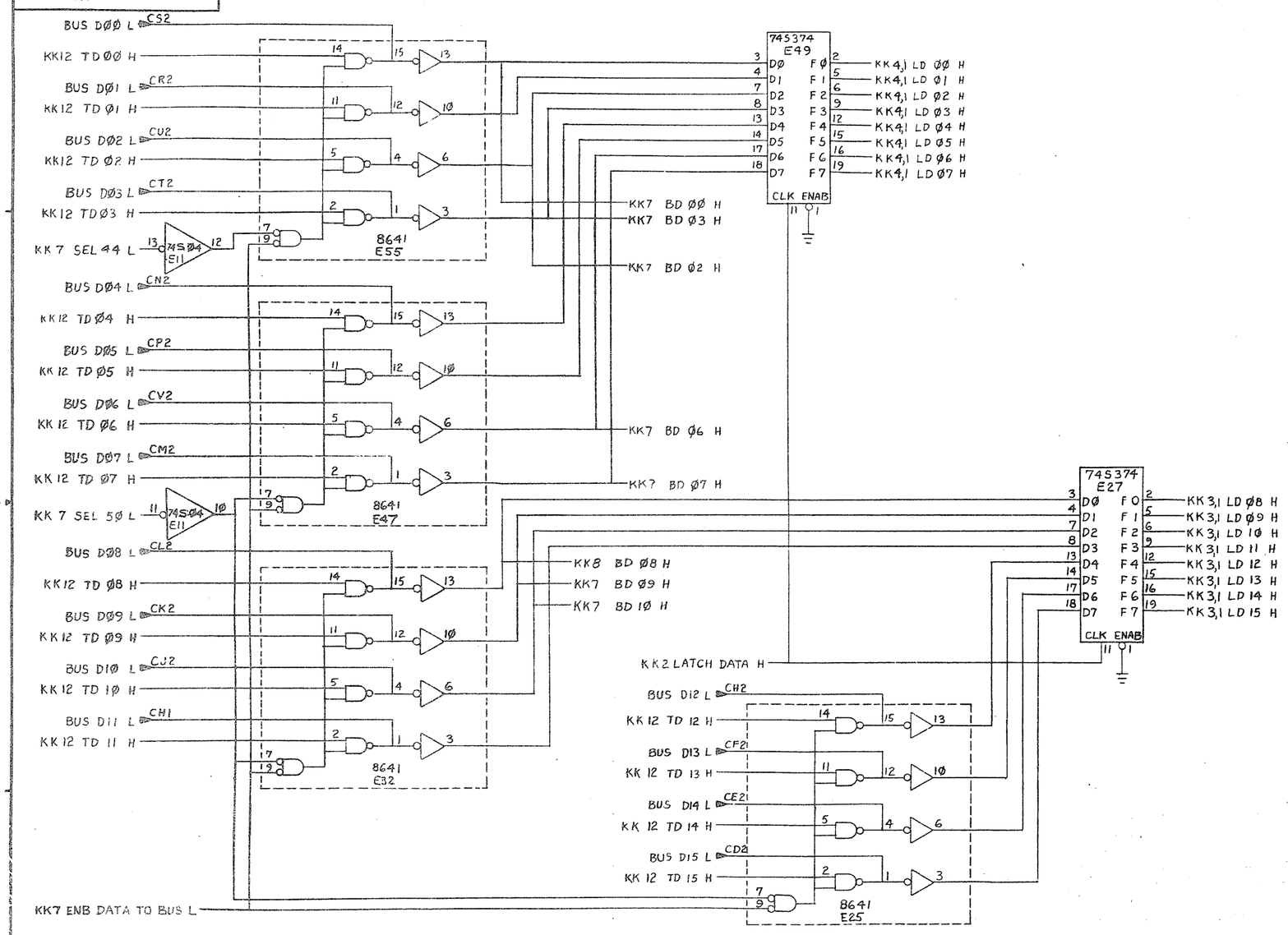

REVISIONS		
CHK	CHANGE NO.	REV.

(UNIBUS DATA, TRANSCIEVERS & LATCHES)

TITLE	SIZE	CODE	NUMBER	REV.
KK11A CACHE (KK10)	D	CS	M8268-0-1	D
SCALE —	SHEET 10 OF 13	DIST.		

JW

27

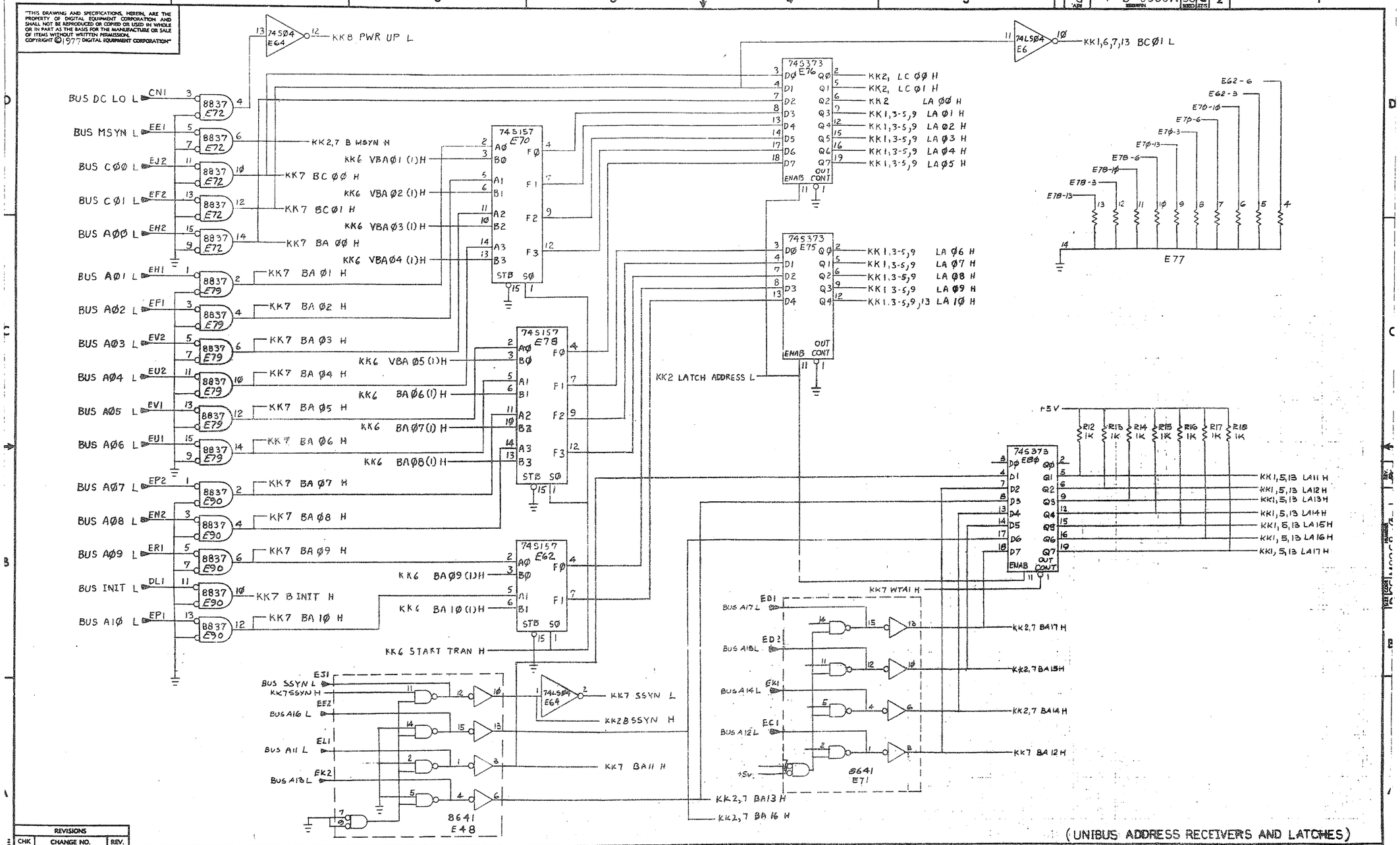

"THIS DRAWING AND SPECIFICATIONS, HEREIN, ARE THE PROPERTY OF DIGITAL EQUIPMENT CORPORATION AND SHALL NOT BE REPRODUCED OR COPIED OR USED IN WHOLE OR IN PART AS THE BASIS FOR THE MANUFACTURE OR SALE OF ITEMS WITHOUT WRITTEN PERMISSION. COPYRIGHT © 1977 DIGITAL EQUIPMENT CORPORATION"
74S04 E64
KK8 PWR UP L
74LS04 E6
KK1,6,7,13 BC01 L
BUS DC LO L
BUS MSYN L
BUS C00 L
BUS C01 L
BUS A00 L
BUS A01 L
BUS A02 L
BUS A03 L
BUS A04 L
BUS A05 L
BUS A06 L
BUS A07 L
BUS A08 L
BUS A09 L
BUS INIT L
BUS A10 L
8837 E72
8837 E79
8837 E90
KK2,7 B MSYN H
KK7 BC 00 H
KK7 BC01 H
KK7 BA 00 H
KK7 BA 01 H
KK7 BA 02 H
KK7 BA 03 H
KK7 BA 04 H
KK7 BA 05 H
KK7 BA 06 H
KK7 BA 07 H
KK7 BA 08 H
KK7 BA 09 H
KK7 B INIT H
KK7 BA 10 H
74S157 E70
74S157 E78
74S157 E62
KK6 VBA01 (1) H
KK6 VBA02 (1) H
KK6 VBA03 (1) H
KK6 VBA04 (1) H
KK6 VBA05 (1) H
KK6 BA06 (1) H
KK6 BA07 (1) H
KK6 BA08 (1) H
KK6 BA09 (1) H
KK6 BA10 (1) H
KK6 START TRAN H
74S373 E76
74S373 E75
74S373 E80
KK2, LC 00 H
KK2, LC 01 H
KK2 LA 00 H
KK1,3-5,9 LA 01 H
KK1,3-5,9 LA 02 H
KK1,3-5,9 LA 03 H
KK1,3-5,9 LA 04 H
KK1,3-5,9 LA 05 H
KK1,3-5,9 LA 06 H
KK1,3-5,9 LA 07 H
KK1,3-5,9 LA 08 H
KK1,3-5,9 LA 09 H
KK1,3-5,9,13 LA 10 H
KK2 LATCH ADDRESS L
E62-6
E62-3
E70-10
E70-6
E70-3
E70-13
E78-6
E78-10
E78-3
E78-13
E77
+5V
R12 1K
R13 1K
R14 1K
R15 1K
R16 1K
R17 1K
R18 1K
KK1,5,13 LA11 H
KK1,5,13 LA12 H
KK1,5,13 LA13 H
KK1,5,13 LA14 H
KK1,5,13 LA15 H
KK1,5,13 LA16 H
KK1,5,13 LA17 H
KK7 WTA1 H
BUS A17 L
BUS A15 L
BUS A14 L
BUS A12 L
KK2,7 BA17 H
KK2,7 BA15 H
KK2,7 BA14 H
KK7 BA 12 H
8641 E71
BUS SSYN L
KK7 SSYN H
BUS A16 L
BUS A11 L
BUS A13 L
74LS04 E64
KK7 SSYN L
KK2 B SSYN H
KK7 BA11 H
KK2,7 BA13 H
KK2,7 BA 16 H
8641 E48
(UNIBUS ADDRESS RECEIVERS AND LATCHES)
REVISIONS
CHK
CHANGE NO.
REV.
TITLE
KK 11 A CACHE (KK11)
D CS M8268-0-1
REV. 2
SCALE
SHEET 11 OF 12
DIST.

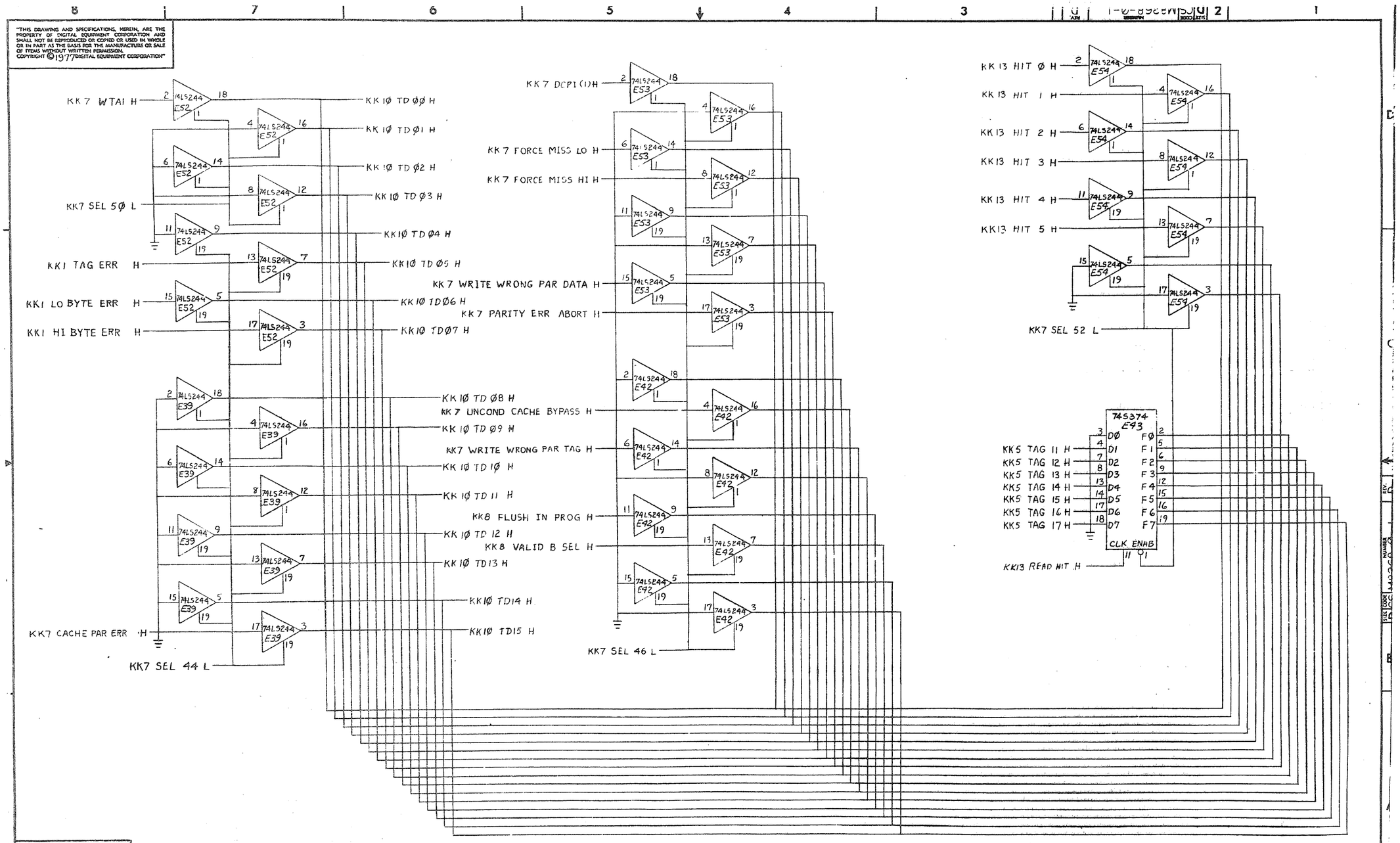

"THIS DRAWING AND SPECIFICATIONS, HEREIN, ARE THE PROPERTY OF DIGITAL EQUIPMENT CORPORATION AND SHALL NOT BE REPRODUCED OR COPIED OR USED IN WHOLE OR IN PART AS THE BASIS FOR THE MANUFACTURE OR SALE OF ITEMS WITHOUT WRITTEN PERMISSION. COPYRIGHT © 1977 DIGITAL EQUIPMENT CORPORATION"

REVISIONS		
CHK	CHANGE NO.	REV.

(UNIBUS REGISTERS)

TITLE	SIZE	CODE	NUMBER	REV.
KK11A CACHE (KK12)	D	CS	M8268-Ø-1	D
SCALE 1/1	SHEET 12 OF 13		DIST.	

24

"THIS DRAWING AND SPECIFICATIONS, HEREIN, ARE THE PROPERTY OF DIGITAL EQUIPMENT CORPORATION AND SHALL NOT BE REPRODUCED OR COPIED OR USED IN WHOLE OR IN PART AS THE BASIS FOR THE MANUFACTURE OR SALE OF ITEMS WITHOUT WRITTEN PERMISSION. COPYRIGHT © 1977 DIGITAL EQUIPMENT CORPORATION"

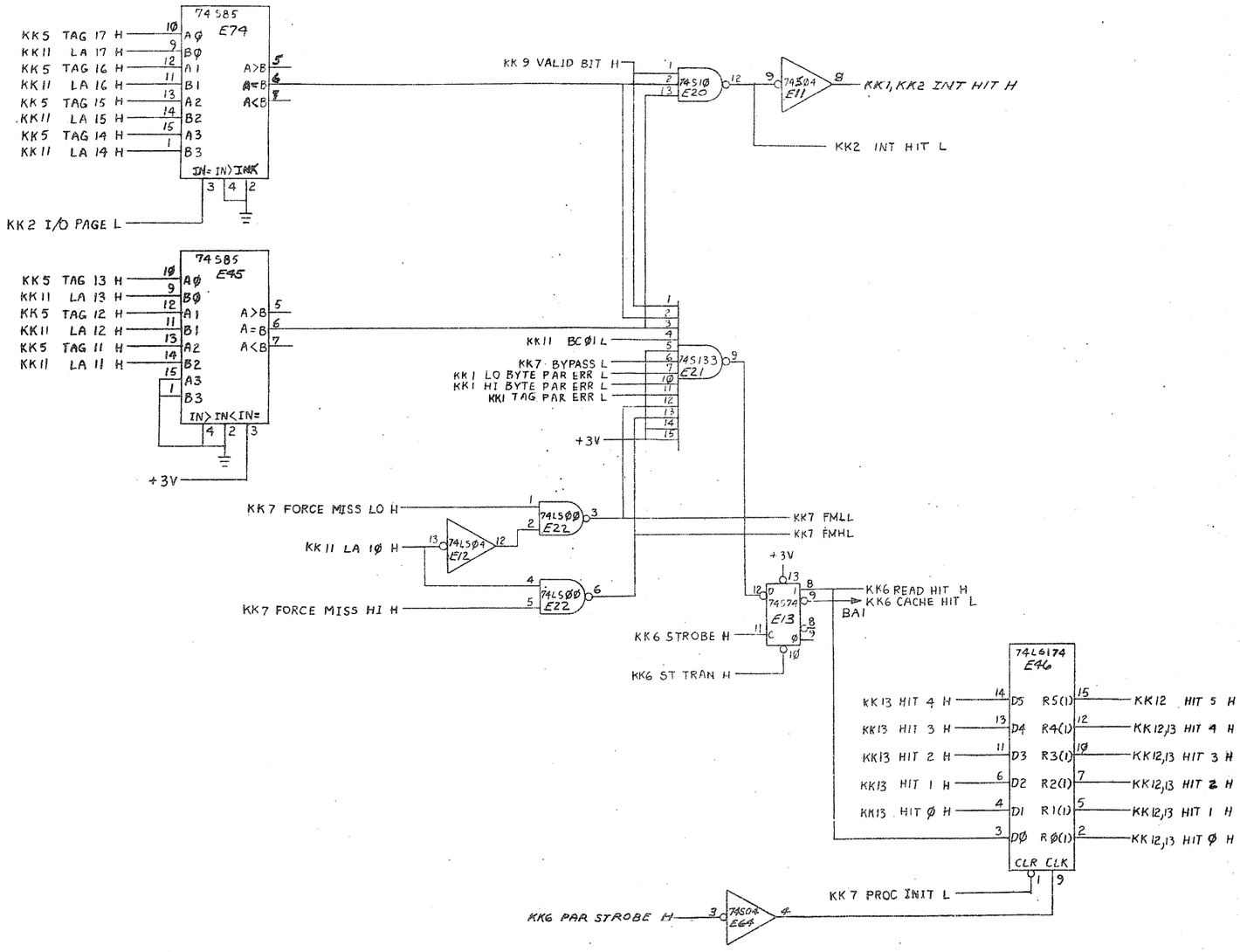

REVISIONS		
CHK	CHANGE NO.	REV.

(HIT LOGIC & SPARE GATES)

TITLE	SIZE	CODE	NUMBER	REV.
KK11A CACHE (KK13)	D	CS	M8268-0-1	D

SCALE — SHEET 13 OF 13 DIST.

DEC FORM NO. 0000 1.02

TW 3C

THIS DRAWING AND SPECIFICATIONS, HEREIN, ARE THE PROPERTY OF DIGITAL EQUIPMENT CORPORATION AND SHALL NOT BE REPRODUCED OR COPIED OR USED IN WHOLE OR IN PART OR THE BASIS FOR THE MANUFACTURE OR SALE OF ITEMS WITHOUT WRITTEN PERMISSION.
COPYRIGHT © 1978 DIGITAL EQUIPMENT CORPORATION

COMPONENT SIDE VIEW

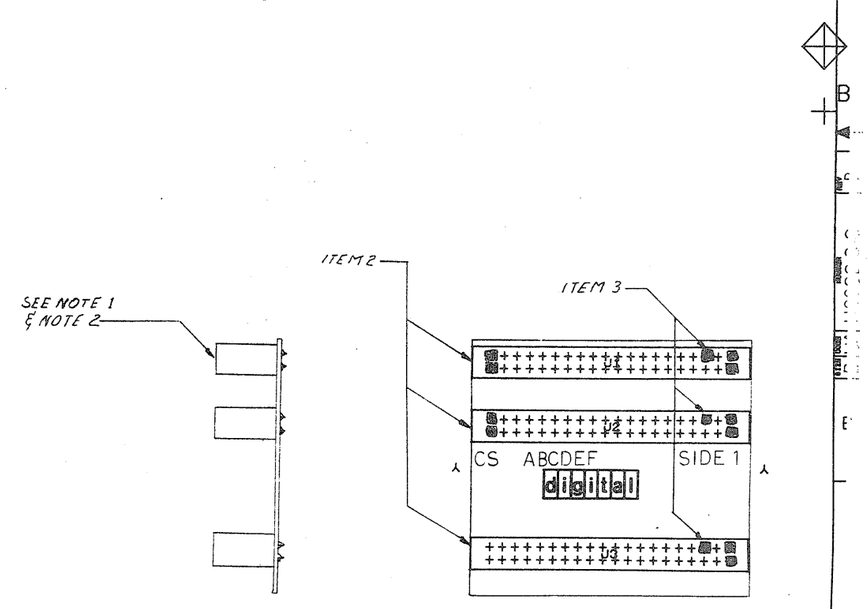

NOTES:

1. INSTALL DEC # 12 13508-03 (KEY) P/L ITEM 3 AFTER DEC # 12 13508-01 (CONN) P/L ITEM 2 ARE INSTALLED
2. CONNECTORS HAVE KEY INSTALLED FROM FACTORY, IN ALL 4 CORNERS.

CHK	CHANGE NO	REV
	5412684-1	B
	E. CROCKER	

ETCH REV.	C-P2
P.C. DESIGN DATA BASE REV.	C

SIGNATURES	DATE
DRN. D. POWERS	9-22-78
CHK'D. [signature]	9-22-78
ENG. [signature]	9-22-78
PROJ. ENG. [signature]	9-22-78
PROD. [signature]	9-22-78
SCALE 2-1	
SHT. 1 OF 3	
NEXT HIGHER ASSY. B-DD-H8822-0	

digital

TITLE TRICONN BOARD

SIZE	CODE	NUMBER	REV
D	UA	H8822-0-0	B

TW 1 MS#

31

THE DRAWING AND SPECIFICATIONS HEREIN ARE THE PROPERTY OF DIGITAL EQUIPMENT CORPORATION AND SHALL NOT BE REPRODUCED IN PART OR IN WHOLE OR TO BE USED AS THE BASIS FOR THE MANUFACTURE OR SALE OF ITEMS WITHOUT WRITTEN PERMISSION.
COPYRIGHT © 1978 DIGITAL EQUIPMENT CORPORATION

LAYER 1

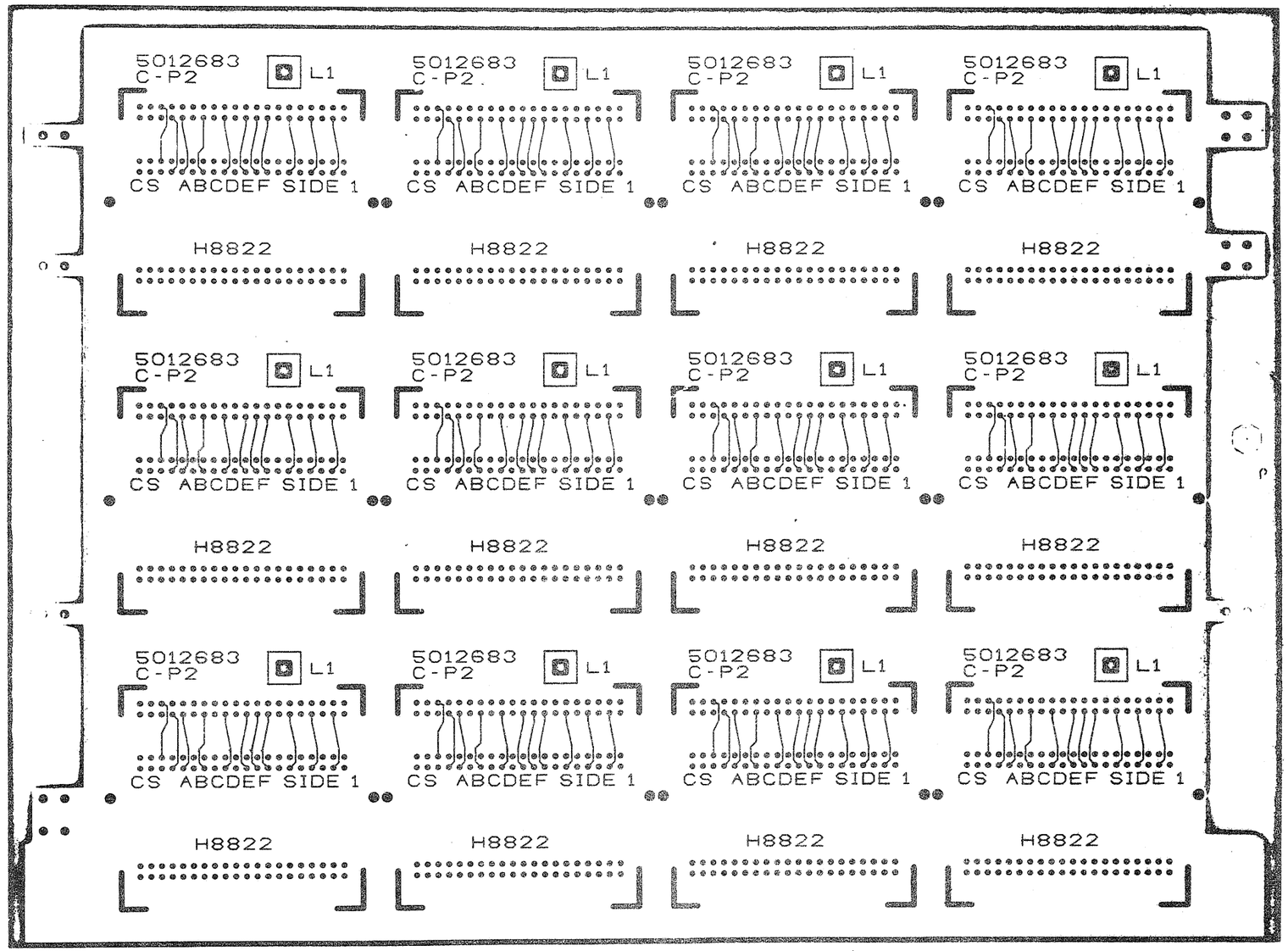

REVISIONS		
CHK	CHANGE NO	REV.

TITLE	SIZE	CODE	NUMBER	REV.
TRICONN BOARD	D	UA	H8822-0-0	B
SCALE 2-1	SHEET 2 OF 3			

TW

32

"THIS DRAWING AND SPECIFICATIONS, HEREIN, ARE THE PROPERTY OF DIGITAL EQUIPMENT CORPORATION AND SHALL NOT BE REPRODUCED OR COPIED OR USED IN WHOLE OR IN PART AS THE BASIS FOR THE MANUFACTURE OR SALE OF ITEMS WITHOUT WRITTEN PERMISSION.
COPYRIGHT © 1978 DIGITAL EQUIPMENT CORPORATION"

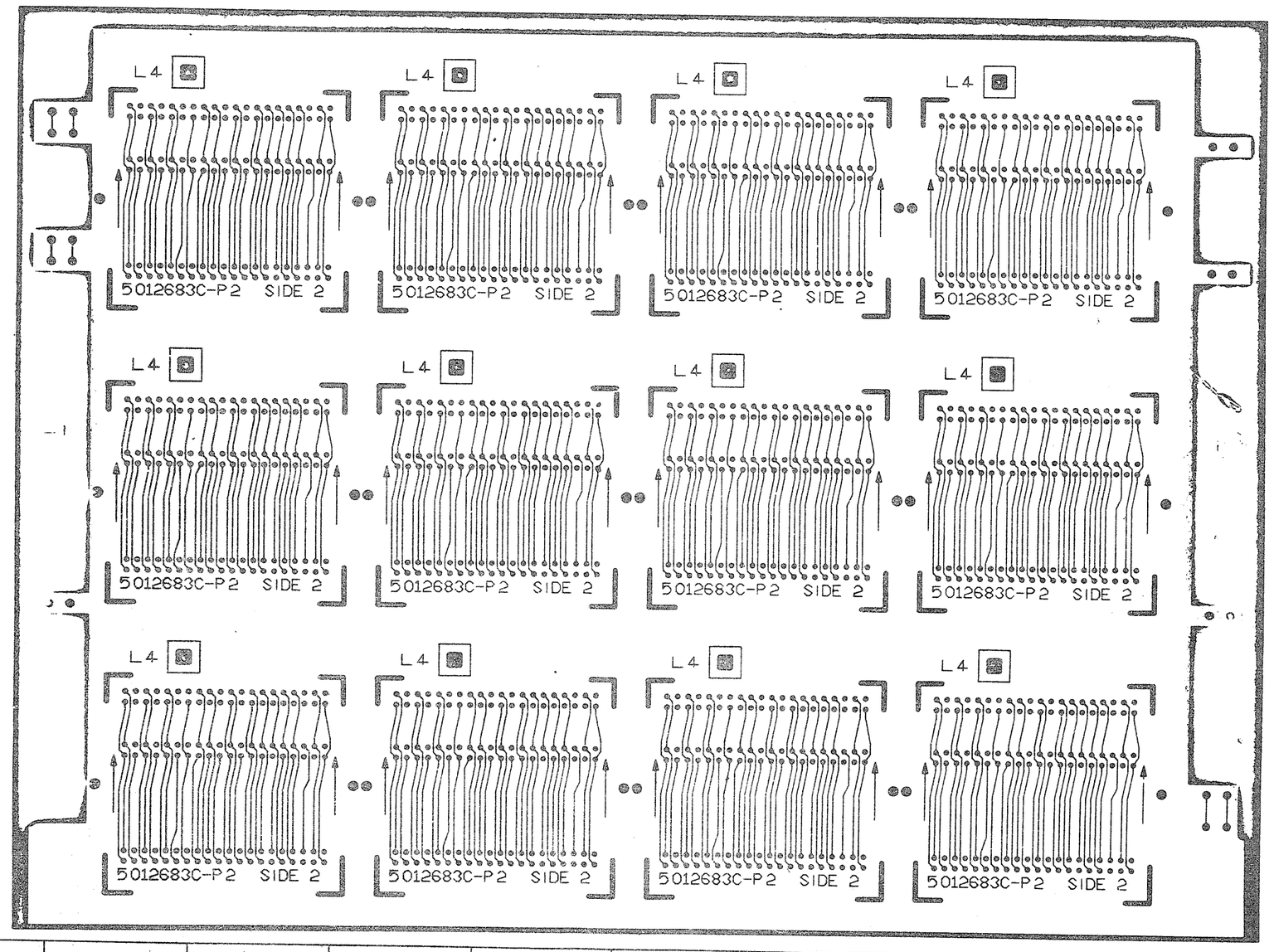

REVISIONS		
CHK	CHANGE NO	REV.

TITLE	SIZE	CODE	NUMBER	REV.
TRICONN BOARD	D	UA	H8822-0-0	B
SCALE 2-1	SHEET 3 OF 3			

DUA H8822-0-0 B

33 TW

AUTOMATED BY FRTLST.3J(25) P A R T S L I S T SHEET A1 OF A1

LINE	ITEM	DOCUMENT NUMBER	PART NUMBER	DESCRIPTION	QTY PER VARIATION 00	REFERENCE DESIGNATOR
1	1	D-MD-5012683-0-0	5012683-00	TRICONN BD	1	
2	2		1213508-01	CONN .100 44POS STRAIGHT	3	J1,J2,J3
3	3		1213508-03	CONN KEYING PLUG	3	

REVISION HISTORY			BASIC PART NO: H8822											
ENG	ECO NUMBER	REV	SECTION A OF A	DRN: DENNIS SIREEN	DATE: 27-DEC-77	D	I	G	I	T	A	L
	INITIAL	A	SECTION.VARIATION INDEX	CHK'D: FRED GERRY	DATE: 27-DEC-77	TITLE PARTS LIST						
	00001	B	[A] 00			TRICONN BOARD						
			[B]									
			[C]	DES.ENG: JOE MERCURI	DATE: 24-FEB-78							
			[D]									
			[E]			DOCUMENT NUMBER						
			[F]	RESP.ENG.: JOE MERCURI	DATE: 24-FEB-78							
			[H]			SIZE	CODE	NUMBER		REV		
			[J]									
			[K]	MFG.ENG.: BOB KING	DATE: 24-FEB-78	K	PL	H8822-0-DBP		B		
			[L]									
			[M]	ASSEMBLY NUMBER:				FILE NAME:		EDIT #		
			[N]	D-UA-H8822-0-0				H8822.PLS		1		

"THIS DRAWING AND SPECIFICATIONS HEREIN, ARE THE PROPERTY OF DIGITAL EQUIPMENT CORPORATION AND SHALL NOT BE REPRODUCED OR COPIED OR USED IN WHOLE OR IN PART AS THE BASIS FOR THE MANUFACTURE OR SALE OF ITEMS WITHOUT WRITTEN PERMISSION. COPYRIGHT (C) 1979, DIGITAL EQUIPMENT CORPORATION "

TW 34

"THIS DRAWING AND SPECIFICATIONS, HEREIN, ARE THE PROPERTY OF DIGITAL EQUIPMENT CORPORATION AND SHALL NOT BE REPRODUCED OR COPIED OR USED IN WHOLE OR IN PART AS THE BASIS FOR THE MANUFACTURE OR SALE OF ITEMS WITHOUT WRITTEN PERMISSION.
COPYRIGHT © 1976, DIGITAL EQUIPMENT CORPORATION"

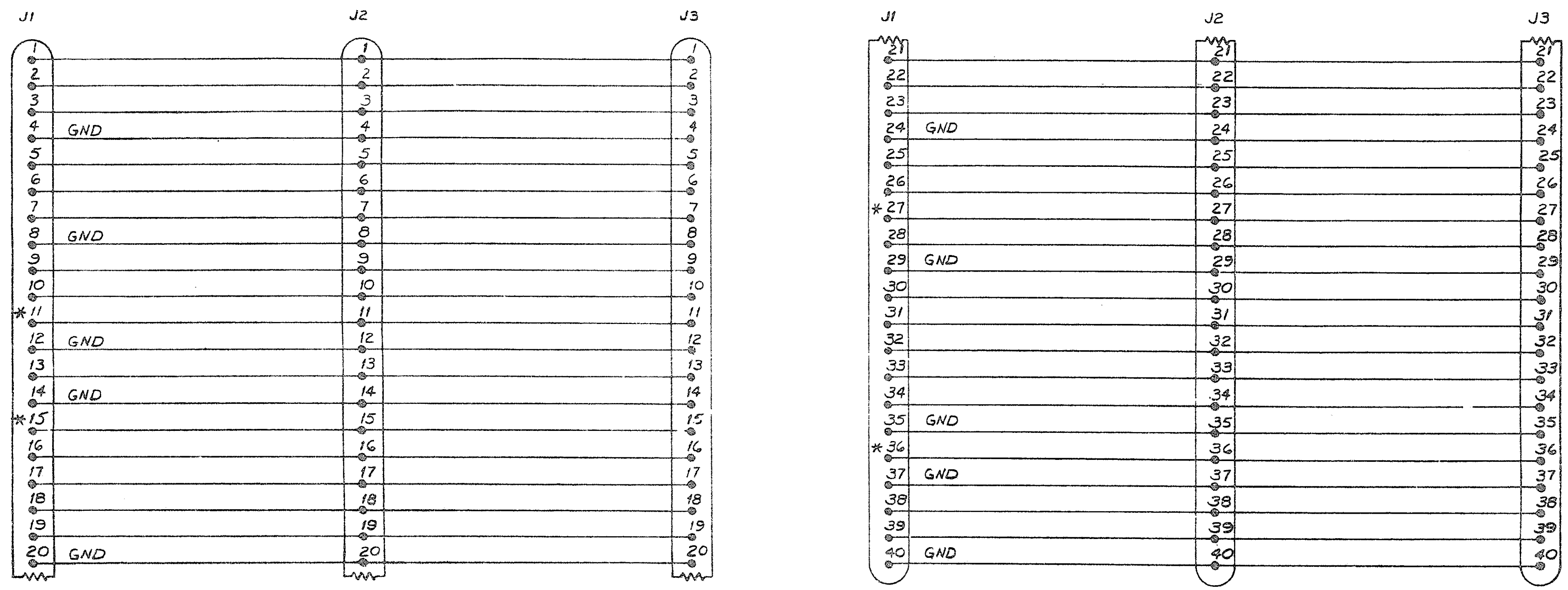

NOTES:
1. * DESIGNATES CONDUCTORS LOCATED ON LAYER 2.

REVISIONS		
CHK	CHANGE NO.	REV.
	5412684-TW001 E.C.ROCKER [illegible]	B

FIRST USED ON OPTION/MODEL	QTY.	DESCRIPTION	PART NO.	ITEM NO.
	PARTS LIST			

DIMENSIONAL TOLERANCE
DIMENSIONS ARE MILLIMETERS / INCHES UNLESS OTHERWISE SPECIFIED

MILLIMETERS	INCHES	ANGLES
X.XX = ±0,10 X.X = ±0,5 X = ±2,	.XXX = ±.005 .XX = ±.02 .X = ±.1	±0° 30'

THIRD ANGLE PROJECTION
REMOVE BURRS AND BREAK SHARP CORNERS SURFACE QUALITY ✓
MATERIAL
FINISH

		DATE
DRN.		12/3/76
CHK'D.	E.T. GERRY	2/3/77
ENG.	Joe Mercuri	FEB-24-78
PROJ. ENG.	Joe Mercuri	FEB-24-78
PROD.	Bob King	2-24-78

NEXT HIGHER ASSY.
SCALE —
SHEET 1 OF 1

digital

TITLE
TRICONN BOARD

SIZE	CODE	NUMBER	REV.
D	CS	H8822-0-1	B

DIST.

DEC FORM NO. DRD 102-C

35

THIS DRAWING AND SPECIFICATIONS, HEREIN, ARE THE PROPERTY OF DIGITAL EQUIPMENT CORPORATION AND SHALL NOT BE REPRODUCED OR COPIED OR USED IN WHOLE OR IN PART AS THE BASIS FOR THE MANUFACTURE OR SALE OF ITEMS WITHOUT WRITTEN PERMISSION.
COPYRIGHT © 197[illegible] DIGITAL EQUIPMENT CORPORATION

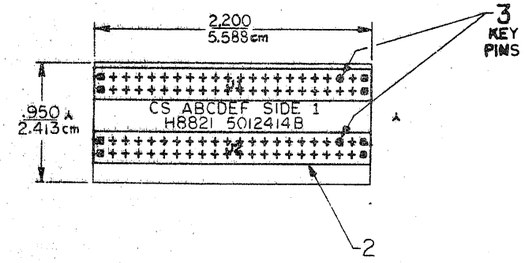

NOTES:

CHK	CHANGE NO	REV

ETCH REV. B
P.C. DESIGN DATA BASE REV. B

SIGNATURES	DATE
DRN. [illegible]	[illegible]
CHK'D. F SEIDMAN	12-3-76
ENG. R Barry	3 DEC 76
PROJ. ENG. R Barry	3 DEC 76
PROD. R Barry	6 DEC 76
SCALE 2/1	
SHT. 1 OF 3	
NEXT HIGHER ASSY. B-DD-H8821-Ø	

digital

TITLE 40 PN INTERCONNECT BO-RD

SIZE	CODE	NUMBER	REV
D	UA	H8821-Ø-Ø	A

1 MS# 50955

36

"THIS DRAWING AND SPECIFICATIONS, HEREIN, ARE THE PROPERTY OF DIGITAL EQUIPMENT CORPORATION AND SHALL NOT BE REPRODUCED OR COPIED OR USED IN WHOLE OR IN PART AS THE BASIS FOR THE MANUFACTURE OR SALE OF ITEMS WITHOUT WRITTEN PERMISSION.
COPYRIGHT ©1976 DIGITAL EQUIPMENT CORPORATION"

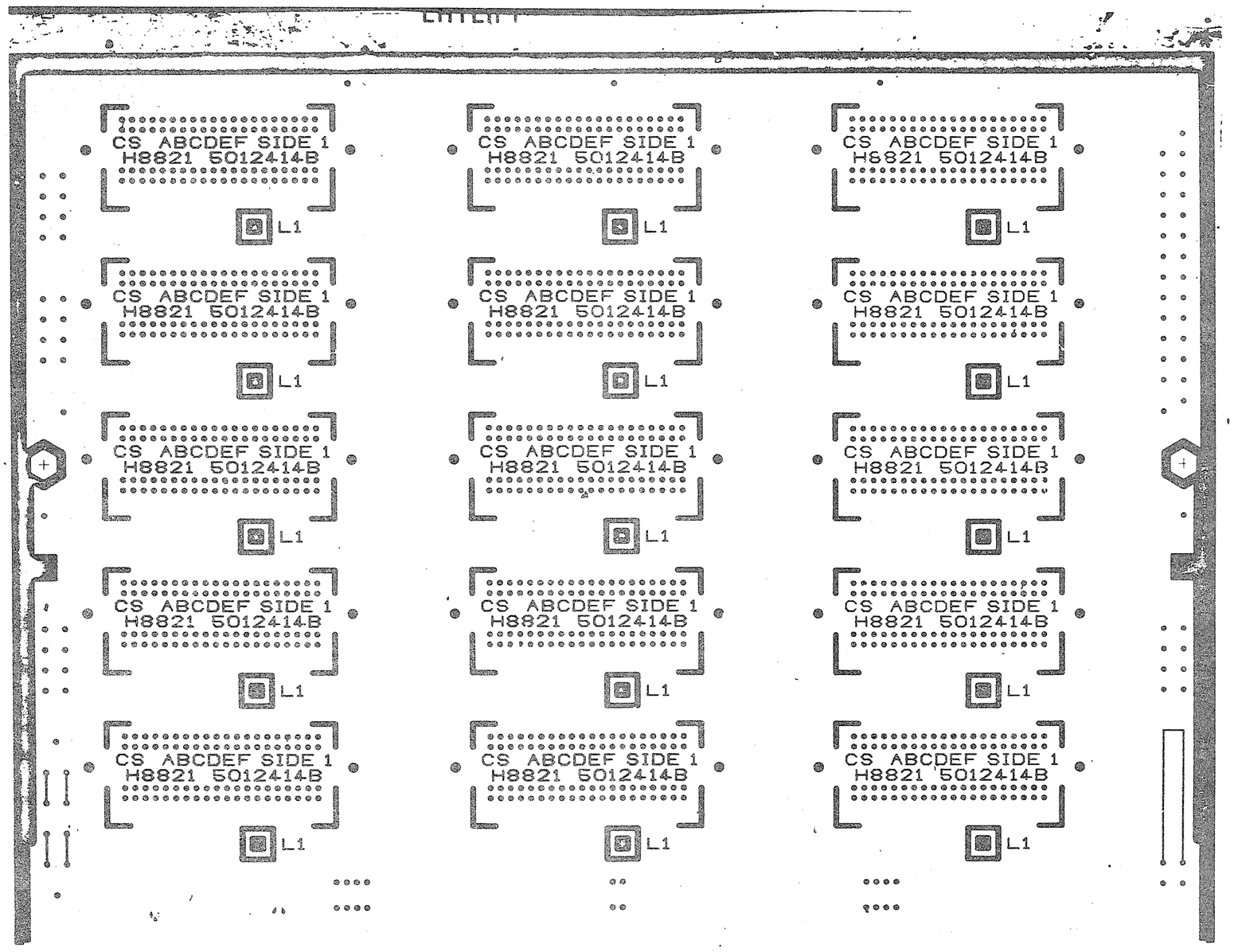

REVISIONS		
CHK	CHANGE NO.	REV.

TITLE	SIZE	CODE	NUMBER	REV.
40 PIN INTERCONNECT BOARD	D	UA	H8821-0-0	A
SCALE 2/1	SHEET 2 OF 3		DIST.	

DEC FORM NO. DOD 137

37

THIS DRAWING AND SPECIFICATIONS, HEREIN, ARE THE PROPERTY OF DIGITAL EQUIPMENT CORPORATION AND SHALL NOT BE REPRODUCED OR COPIED OR USED IN WHOLE OR IN PART AS THE BASIS FOR THE MANUFACTURE OR SALE OF ITEMS WITHOUT WRITTEN PERMISSION
COPYRIGHT ©1976 DIGITAL EQUIPMENT CORPORATION

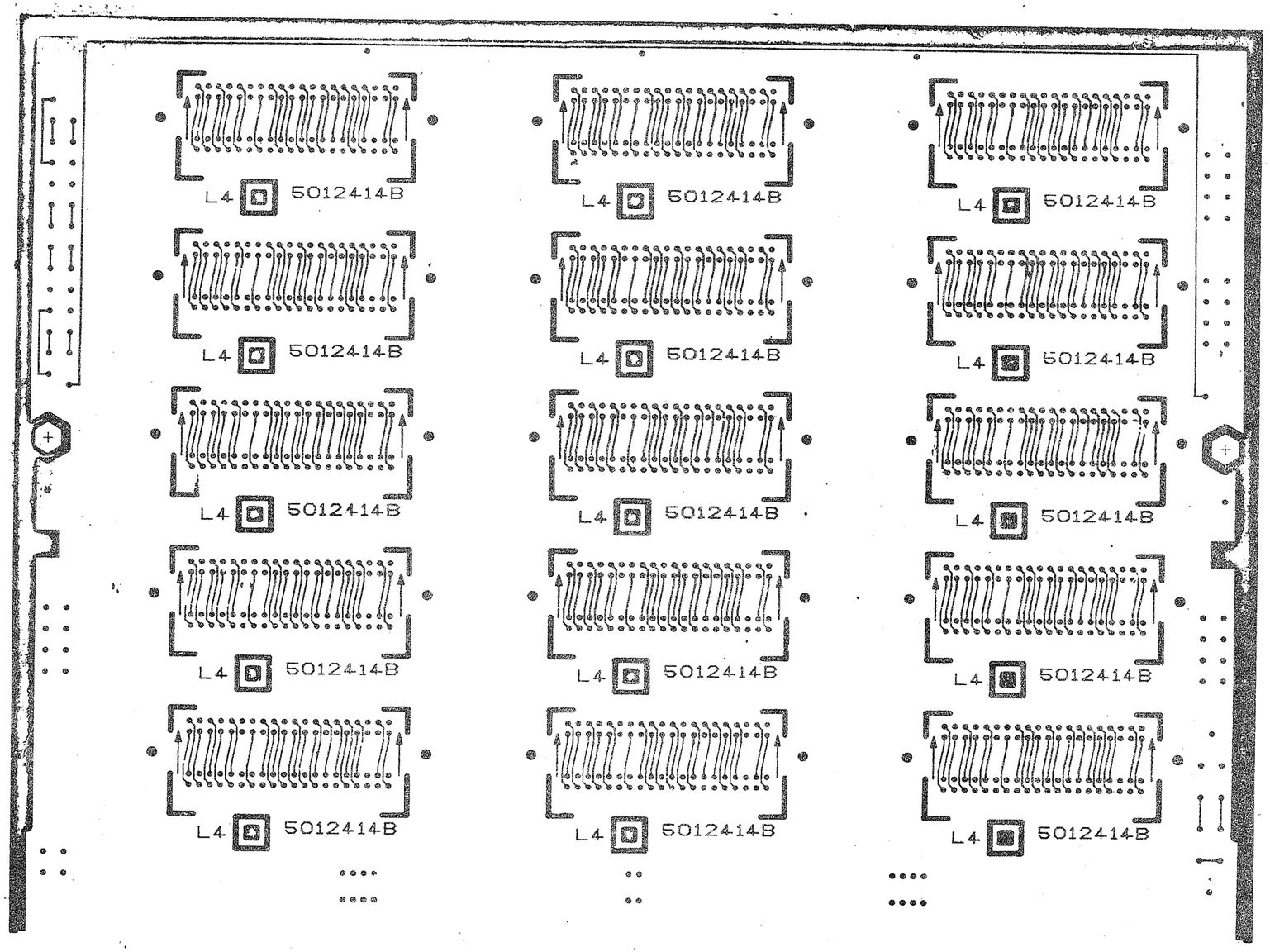

REVISIONS		
CHK	CHANGE NO	REV

TITLE	SIZE	CODE	NUMBER	REV.
40 PIN INTERCONNECT BOARD	D	UA	H8821-0-0	A
SCALE 2/1	SHEET 3 OF 3		DIST.	

38

DIGITAL EQUIPMENT CORPORATION
PARTS LIST

MADE BY F. MULLIGAN DATE 8/3/76	CHECKED F. [illegible] DATE 8/4/76	SECTION
ENG R. Barry 3DEC76 DATE	PROD R. Barry DATE 6DEC76	ISSUED SECTION

NOTES:

ITEM NO.	DRAWING NO.	PART NO.	DESCRIPTION	QUANTITY/VARIATION H8821-Ø-Ø												REF DESIGNATION
1	D-MD-5Ø12414-Ø-Ø	5012414	ETCH BOARD	1												
2		12-13508-01	CONNECTOR, 44 PIN REWORKED	2												J1-J2
3		12-13508-03	KEY PINS	2												

E.C.O. NO.

"THIS DRAWING AND SPECIFICATIONS, HEREIN, ARE THE PROPERTY OF DIGITAL EQUIPMENT CORPORATION AND SHALL NOT BE REPRODUCED OR COPIED OR USED IN WHOLE OR IN PART AS THE BASIS FOR THE MANUFACTURE OR SALE OF ITEMS WITHOUT WRITTEN PERMISSION COPYRIGHT © 1976 . DIGITAL EQUIPMENT CORPORATION"

TITLE 40 PIN INTERCONNECT BOARD

ASSY NO. D-UA-H8821-Ø-Ø

SHEET 1 OF 1

SIZE	CODE	NUMBER	REV
B	PL	H8821-Ø-Ø	A

INSERTION PARTS LIST DATA BASE REV —//—

I.N-01140A-16-R276(325) DRB 125

"THIS DRAWING AND SPECIFICATIONS, HEREIN, ARE THE PROPERTY OF DIGITAL EQUIPMENT CORPORATION AND SHALL NOT BE REPRODUCED OR COPIED OR USED IN WHOLE OR IN PART AS THE BASIS FOR THE MANUFACTURE OR SALE OF ITEMS WITHOUT WRITTEN PERMISSION.
COPYRIGHT © 1976, DIGITAL EQUIPMENT CORPORATION"

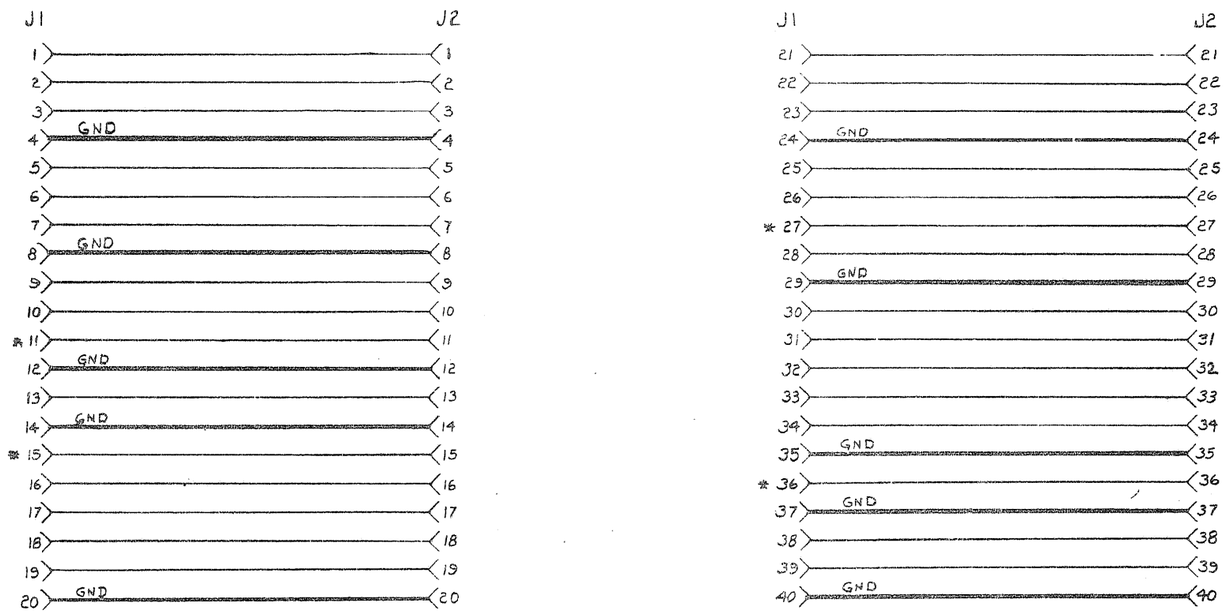

NOTES:
1. * DESIGNATES CONDUCTORS TO BE LOCATED ON LAYER 2
2. GND WILL BE ON LAYER 3 & REMAINING ETCH ON LAYER 4
3. LAYER 1 (SIDE 1) WILL BE FREE OF ALL CIRCUITRY

FIRST USED ON OPTION/MODEL	QTY.	DESCRIPTION	PART NO.	ITEM NO.
	PARTS LIST			

UNLESS OTHERWISE SPECIFIED
DIMENSION IN INCHES
TOLERANCES

DECIMALS	ANGLES
.xxx = .005 .xx = .02 .x = .1	±0° 30'

REMOVE BURRS AND BREAK SHARP CORNERS SURFACE QUALITY √

MATERIAL

FINISH

DRN. F. MULLIGAN	DATE 8/3/76	digital EQUIPMENT CORPORATION MAYNARD, MASSACHUSETTS
CHK'D.	DATE 8/10/76	
ENG. R Barry	DATE 8 DEC 76	TITLE
PROJ. ENG. R Barry	DATE 8 DEC 76	40 PIN INTERCONNECT BOARD
PROD.	DATE 8 DEC 76	
NEXT HIGHER ASSY.		
SCALE NA	SHEET 1 OF 1	

SIZE	CODE	NUMBER	REV.
C	CS	H8821-Ø-1	A

DIST

REVISIONS

CHK	CHANGE NO.	REV.

SIZE C CODE CS NUMBER H8821-Ø-1 REV. A

40

DIGITAL EQUIPMENT CORPORATION
MAYNARD, MASSACHUSETTS
PARTS LIST

MADE BY R. Fredelko DATE 23 MAR 78	CHECKED R Day DATE 8-JULY-78	SECTION
ENG R Day DATE 8-JULY-78	PROD Paul Drazic DATE 9-26-78	ISSUED SECT.

ITEM NO.	DWG NO./PART NO.	DESCRIPTION	QUANTITY VARIATION KK11-A
1	EK-KK11-A-UG-001	KK11-A CACHE MEMORY USER'S GUIDE	1
2	AK-E112-A-ML	SOFTWARE LIBRARY KIT (PAPER TAPE)	1
3	AC-E11Ø-A-ML	SOFTWARE LIBRARY KIT (DOCUMENTATION)	1
4	MPØØ574	KK11-A FIELD MAINTENANCE PRINT SET	1
5	1303114-00	1K 1% RESISTOR	1

NOTE: 1K RESISTOR IS USED TO REPLACE R2 ON M8266 PROCESSOR BOARD IF THE VALUE OF R2 IS 750 OHM.

TITLE	ASSY NO.	SIZE	CODE	NUMBER	REV	ECO NO.
KK11-A SHIPPING LIST	NONE	A	PL	KK11-A-2	C	
	SHEET 1 OF 1	DIST				

DEC FORM
DRA 110

41