THIS SCHEMATIC IS FURNISHED ONLY FOR TEST AND MAINTENANCE PURPOSES. THE CIRCUITS ARE PROPRIETARY IN NATURE AND SHOULD BE TREATED ACCORDINGLY
COPYRIGHT 1970 BY DIGITAL EQUIPMENT CORPORATION

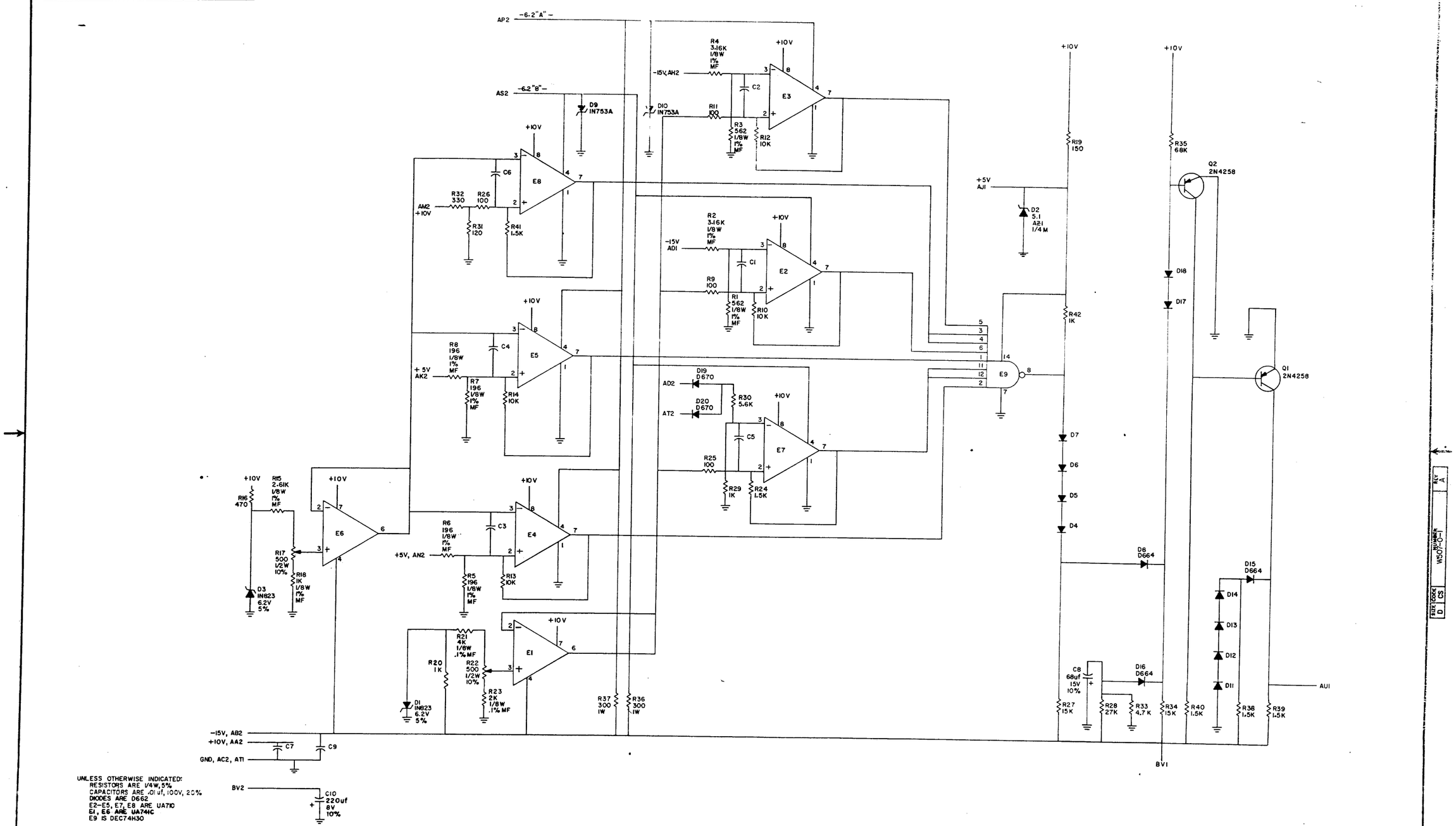

UNLESS OTHERWISE INDICATED:
RESISTORS ARE 1/4W, 5%
CAPACITORS ARE .01 uf, 100V, 20%
DIODES ARE D662
E2-E5, E7, E8 ARE UA710
E1, E6 ARE UA741C
E9 IS DEC74H30

REVISIONS		
CHK	CHG NO.	REV.
Fred	00001	A

DRN Bonnie Lund DATE 6/5/70
CHK'D DATE
ENG S. Mann DATE 6/12/70
PROD J. W. DATE 6/24/70

TRANSISTOR & DIODE CONVERSION CHART

DEC	EIA	DEC	EIA
D664	1N3606	D670	1N3653
D662	1N645	1N823	SAME
2N4258	SAME	1N753A	SAME
AZ1 1/4W 5%	SAME		

digital EQUIPMENT CORPORATION MAYNARD, MASSACHUSETTS

TITLE LOW VOLTAGE DETECTOR W507

SIZE D | CODE CS | NUMBER W507-0-1 | REV. A

PRINTED CIRCUIT REV. B

DEC FORM NO. 3B3 118

MS 711 1-2

5