THIS SCHEMATIC IS FURNISHED ONLY FOR TEST AND MAINTENANCE PURPOSES. THE CIRCUITS ARE PROPRIETARY IN NATURE AND SHOULD BE TREATED ACCORDINGLY
COPYRIGHT 1971 BY DIGITAL EQUIPMENT CORPORATION

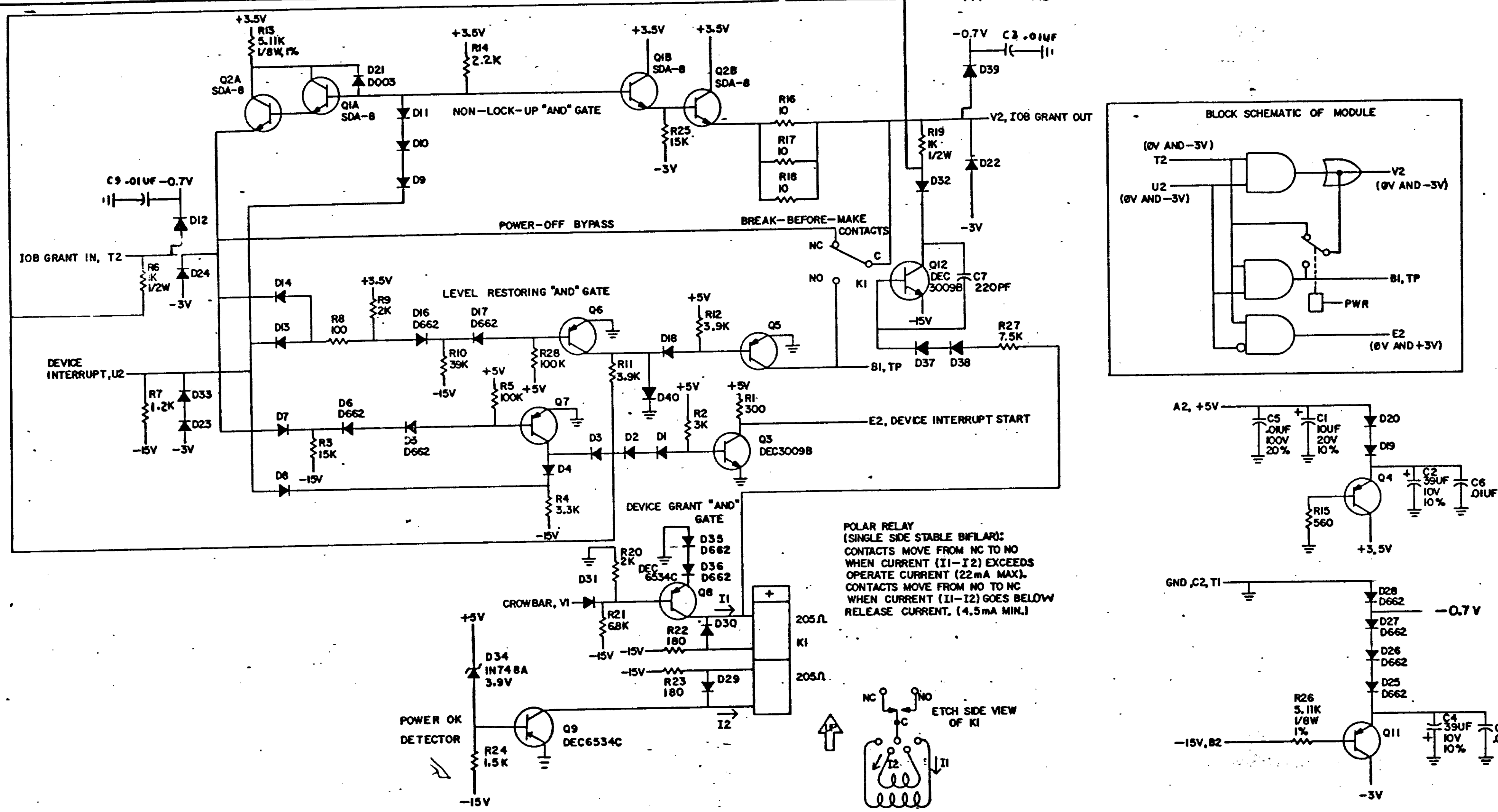

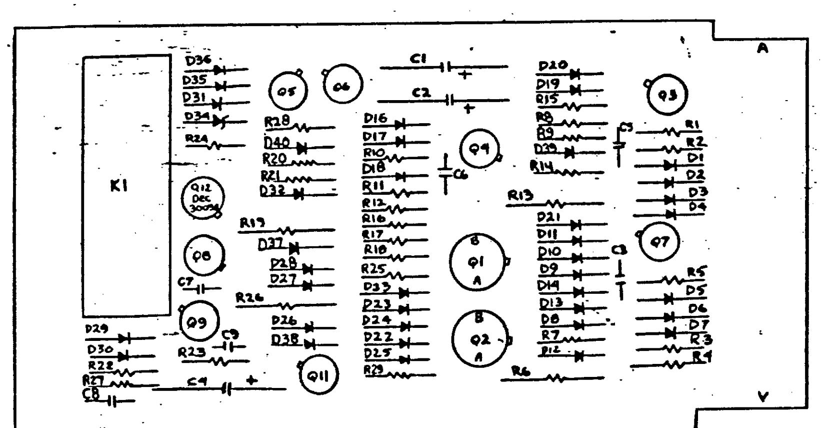

UNLESS OTHERWISE INDICATED:
TRANSISTORS = DEC4258
RESISTORS = 1/4W, 5%
DIODES = D664
K1 = MIDTEX/AEMCO 166-152-N00

ITEM NO.	DEC PART NO.	DESCRIPTION	QTY.
42	1503409-02	TRANSISTOR DEC 6534C	2
41	1301423	RES. 6.8K ¼W 5%	1
39	1300391	RES. 1.5K ¼W 5%	1
38	1301322	RES. 180 ¼W 5%	2
36	1100122	DIODE 1N748A 3.9V	1
35	9008337-03	HANDLE, FLIP CHIP - WHITE	1
34	9006732	EYELET #GS4-7	2
33	1210093-0	RELAY, MIDTEX	1
32	1505321	TRANSISTOR 2N4258	5
31	1503100	TRANSISTOR DEC 3009B	2
30	1502105	TRANSISTOR SDA-8	2
29	1304854	RES. 5.11K, 1/8W, 1% MF	2
28	1301320	RES. 1.2K, ¼W, 5%	1
27	1302514	RES. 39K, ¼W, 5%	1
26	1302466	RES. 100K, ¼W, 5%	1
25	1302388	RES. 2K, ¼W, 5%	2
24	1301890	RES. 560, ¼W, 5%	1
23	1300444	RES. 3.9K, ¼W, 5%	2
22	1301425	RES. 300, ¼W, 5%	2
21	1301422	RES. 7.5K, 1/4W 5%	1
20	1301317	RES. 10, ¼W, 5%	3
19	1300496	RES. 15K, ¼W, 5%	2
18	1302466	RES. 100K, 1/4W, 5%	1
17	1300439	RES. 3.3K, ¼W, 5%	1
16	1300432	RES. 3K, ¼W, 5%	1
15	1300417	RES. 2.2K, 1/4W, 5%.	1
14	1300364	RES. 1K, ¼W, 5%	2
12	1000021	CAP. 220 PF, 100V, 5%	1
11	1300229	RES. 100, ¼W, 5%	1
10	1100114	DIODE D664	27
9	1100113	DIODE D662	10
8	1100100	DIODE D003	1
7	1004813	CAP. 10UF, ± 20V, 10% S. TANT	1
6	1001610	CAP. .01UF, 100V, 20% DISC	5
5	1000076	CAP. 39UF, ±10V, 10% S. TANT	2
4	5009402	ETCHED CIRCUIT BOARD	1
3	B-MH-W106-0-6	MODULE ECO HISTORY	
2	C-AH-W106-0-5	ASSY/DRILLING HOLE LAYOUT	
1	K-CC-W106-0-4	X-Y COORDINATE HOLE LOCATION	

PARTS LIST

REVISIONS		
CHK	CHG NO	REV
	00001	B
	00002	C
	00003	D
	00004	E

DRN NANCY MOORE DATE 1/11/70
CHK'D DATE 3-1-71
ENG. DATE 3-1-71
PROD. DATE

TRANSISTOR & DIODE CONVERSION CHART

DEC	EIA	DEC	EIA
D003	1N994	D662	1N645
D664	1N3606	DEC4258	2N4258
DEC3009B	2N3009	SDA-8	NONE
1N748A	SAME		
DEC6534C	MPS6534		

digital EQUIPMENT CORPORATION MAYNARD, MASSACHUSETTS

TITLE P.I. REQUEST GRANT W106

SIZE D CODE CS NUMBER W106-0-1 REV. E

PRINTED CIRCUIT REV. D

DEC FORM NO. DOS 116