THIS SCHEMATIC IS FURNISHED ONLY FOR TEST AND MAINTENANCE PURPOSES. THE CIRCUITS ARE PROPRIETARY IN NATURE AND SHOULD BE TREATED ACCORDINGLY.
COPYRIGHT 1964 BY DIGITAL EQUIPMENT CORPORATION

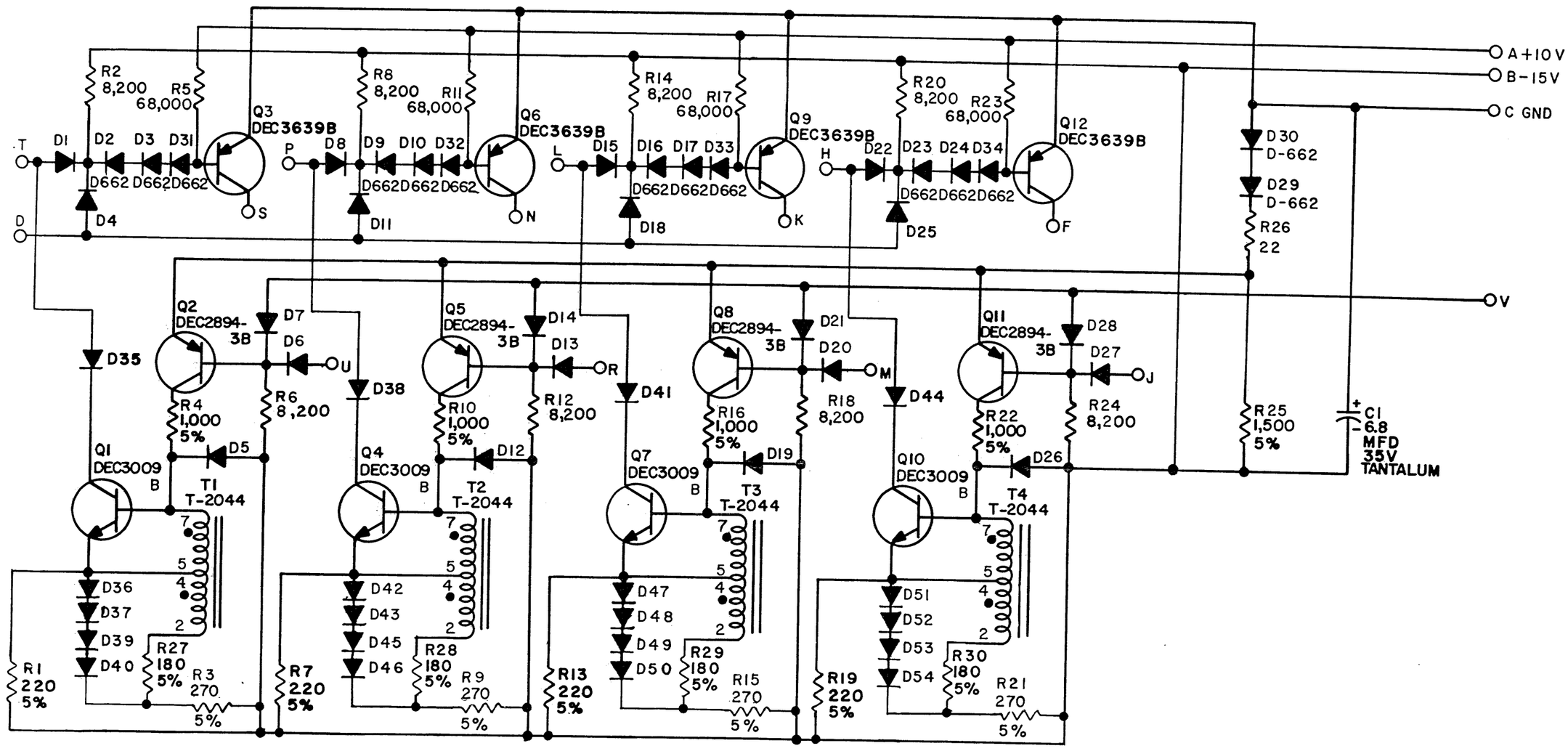

UNLESS OTHERWISE INDICATED:
RESISTORS ARE 1/4W; 10%
DIODES ARE D-664
PARTS LIST A-PL-W102-0-0

REVISIONS			
CHK	CHG NO	REV	
DAW	5338	5-6	
REV & REDR.	5863	H	
	7132	J	
	00001	K	
	00002	L	
	00003	M	
		N	SULLIVAN

DRN.	H.W. PORTER	DATE	10-12-64
CHK'D	N. PERRYMAN	DATE	10-22-64
ENG.	D.A. WHITE	DATE	10-22-64
PROD.	R. Wesselhoeft	DATE	1-31-73

TRANSISTOR & DIODE CONVERSION CHART

DEC	EIA	DEC	EIA
DEC2894-3B	NONE		
DEC3639B	2N3639		
DEC3009B	2N3009		
D662	IN645		
D664	IN3606		

digital EQUIPMENT CORPORATION
MAYNARD, MASSACHUSETTS

TITLE PULSED BUS TRANSCEIVER W102

SIZE	CODE	NUMBER	REV.
B	CS	W102-0-1	N

PRINTED CIRCUIT REV. J

DEC FORM NO.
DRB 102

SIZE B | CODE CS | NUMBER W102-0-1 | REV N