THIS SCHEMATIC IS FURNISHED ONLY FOR TEST AND MAINTENANCE PURPOSES. THE CIRCUITS ARE PROPRIETARY IN NATURE AND SHOULD BE TREATED ACCORDINGLY.
COPYRIGHT 1964 BY DIGITAL EQUIPMENT CORPORATION

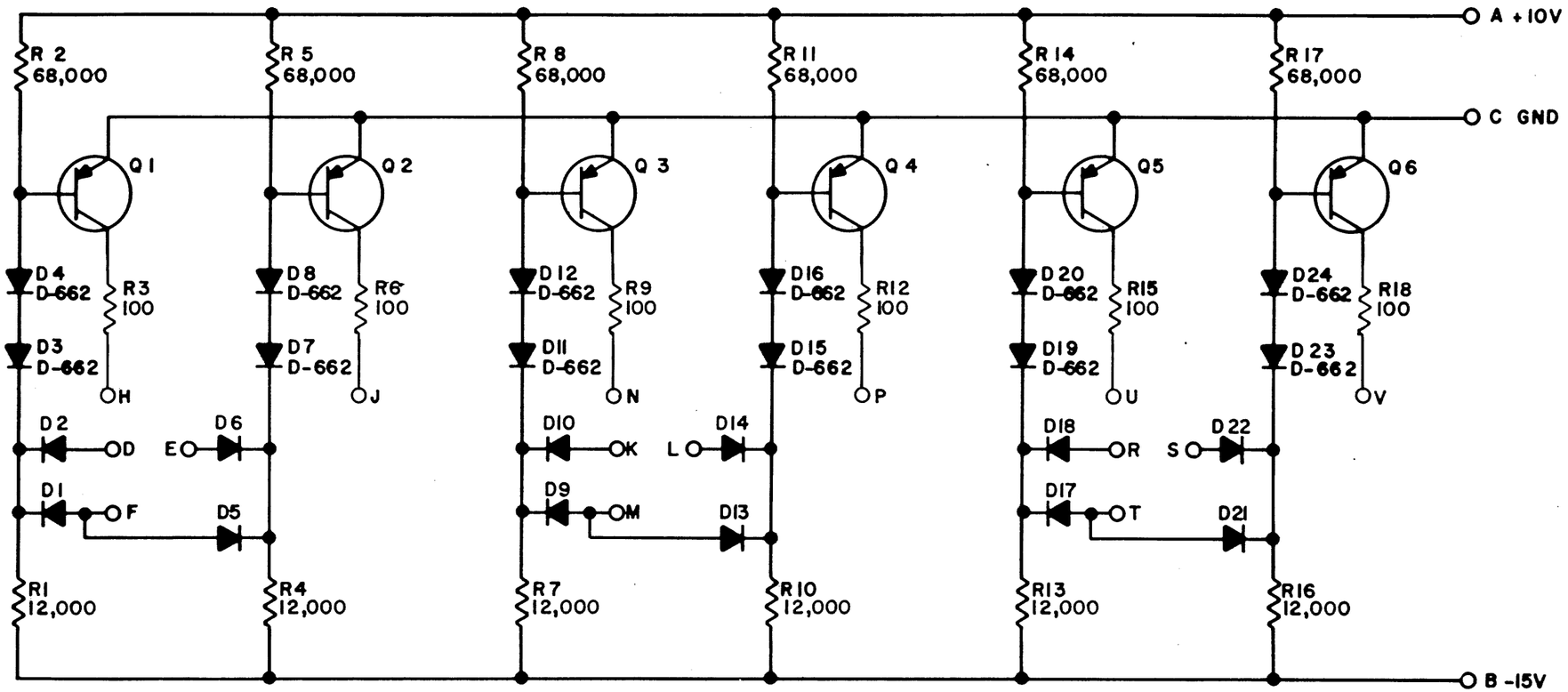

UNLESS OTHERWISE INDICATED:
TRANSISTORS ARE DEC 2894-1B
RESISTORS ARE 1/4 W, 10%
DIODES ARE D-664

REVISIONS			
CHK	CHG NO.	REV.	
REV.	5672	A	
	5705	B	

DRN.	A. OUELLETTE	DATE	8-31-64
CHK'D	N. PERRYMAN	DATE	9-4-64
ENG.	D. WHITE	DATE	9-4-64
PROD.		DATE	

TRANSISTOR & DIODE CONVERSION CHART

DEC	EIA	DEC	EIA
DEC2894-1B	NONE		
D662	1N645		
D664	1N3606		

digital EQUIPMENT CORPORATION
MAYNARD, MASSACHUSETTS

TITLE
IO BUS DRIVER W101

SIZE	CODE	NUMBER	REV.
B	CS	W101-0-1	B

PRINTED CIRCUIT REV. B

DEC FORM NO.
DRB 102

SIZE B | CODE CS | NUMBER W101-0-1 | REV. B