SIZE	CODE	NUMBER	REV.
B	CS	S603-0-1	E

THIS SCHEMATIC IS FURNISHED ONLY FOR TEST AND MAINTENANCE PURPOSES. THE CIRCUITS ARE PROPRIETARY IN NATURE AND SHOULD BE TREATED ACCORDINGLY.
COPYRIGHT 1965 BY DIGITAL EQUIPMENT CORPORATION

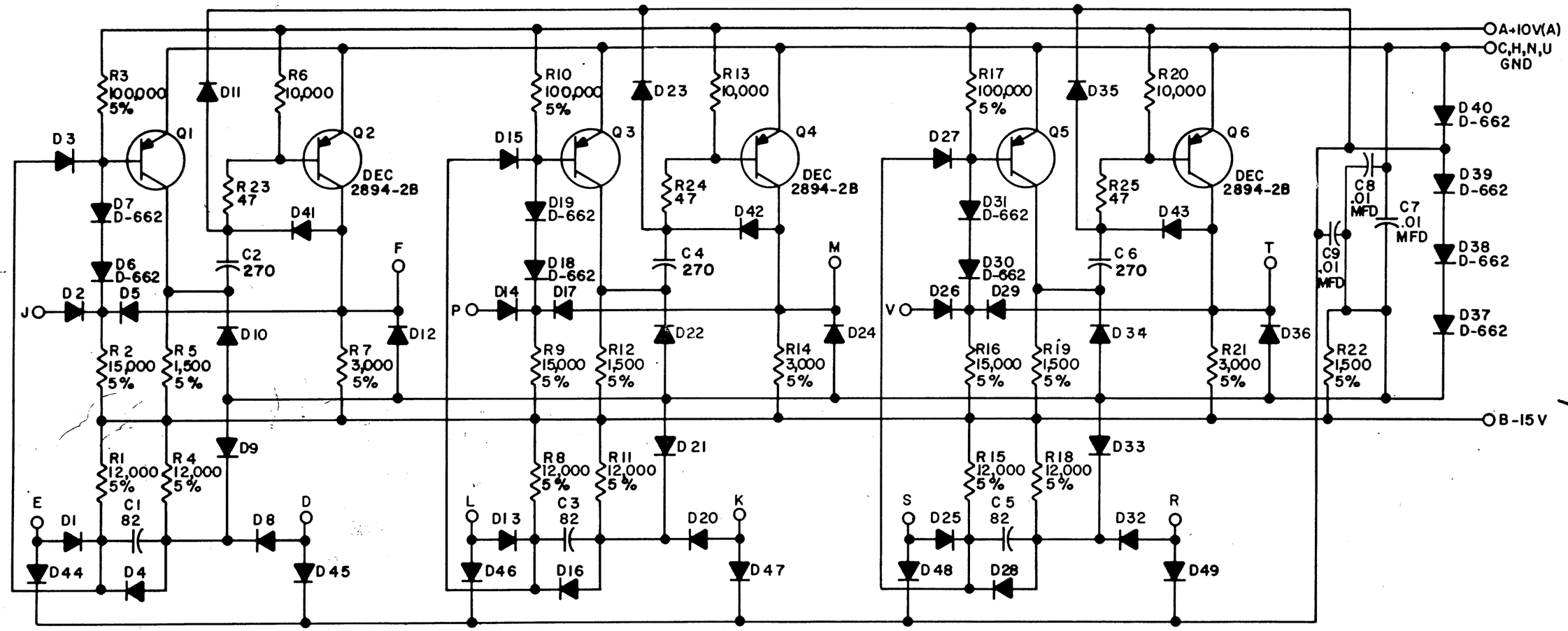

UNLESS OTHERWISE INDICATED:
RESISTORS ARE 1/4W; 10%
CAPACITORS ARE MMFD
DIODES ARE D-664
TRANSISTORS ARE DEC 3639-C

USE THE ETCH BOARD OF THE R603

PARTS LIST A-PL-S603-0-0

REVISIONS			
CHK	CHG NO.	REV.	
DAW	5273	2	
REV. & REDR.	5371	C	
	5923	D	
	6859	E	

DRN. I HAHN	DATE 6-14-65		
CHK'D R SILVERMAN	DATE 6-18-65		
ENG. R. SOGGE	DATE 6-18-65		
PROD.	DATE		

TRANSISTOR & DIODE CONVERSION CHART

DEC	EIA	DEC	EIA
DEC 2894-2B	NONE		
DEC 3639C	2N3639		
D662	IN645		
D664	IN3606		

digital EQUIPMENT CORPORATION
MAYNARD, MASSACHUSETTS

TITLE
PULSE AMPLIFIER S603

SIZE	CODE	NUMBER	REV.
B	CS	S603-0-1	E

PRINTED CIRCUIT REV. D

DIST. 324 434 435

PINK

DEC FORM NO.
DRB 102