THIS SCHEMATIC IS FURNISHED ONLY FOR TEST AND MAINTENANCE PURPOSES. THE CIRCUITS ARE PROPRIETARY IN NATURE AND SHOULD BE TREATED ACCORDINGLY
COPYRIGHT 19 BY DIGITAL EQUIPMENT CORPORATION

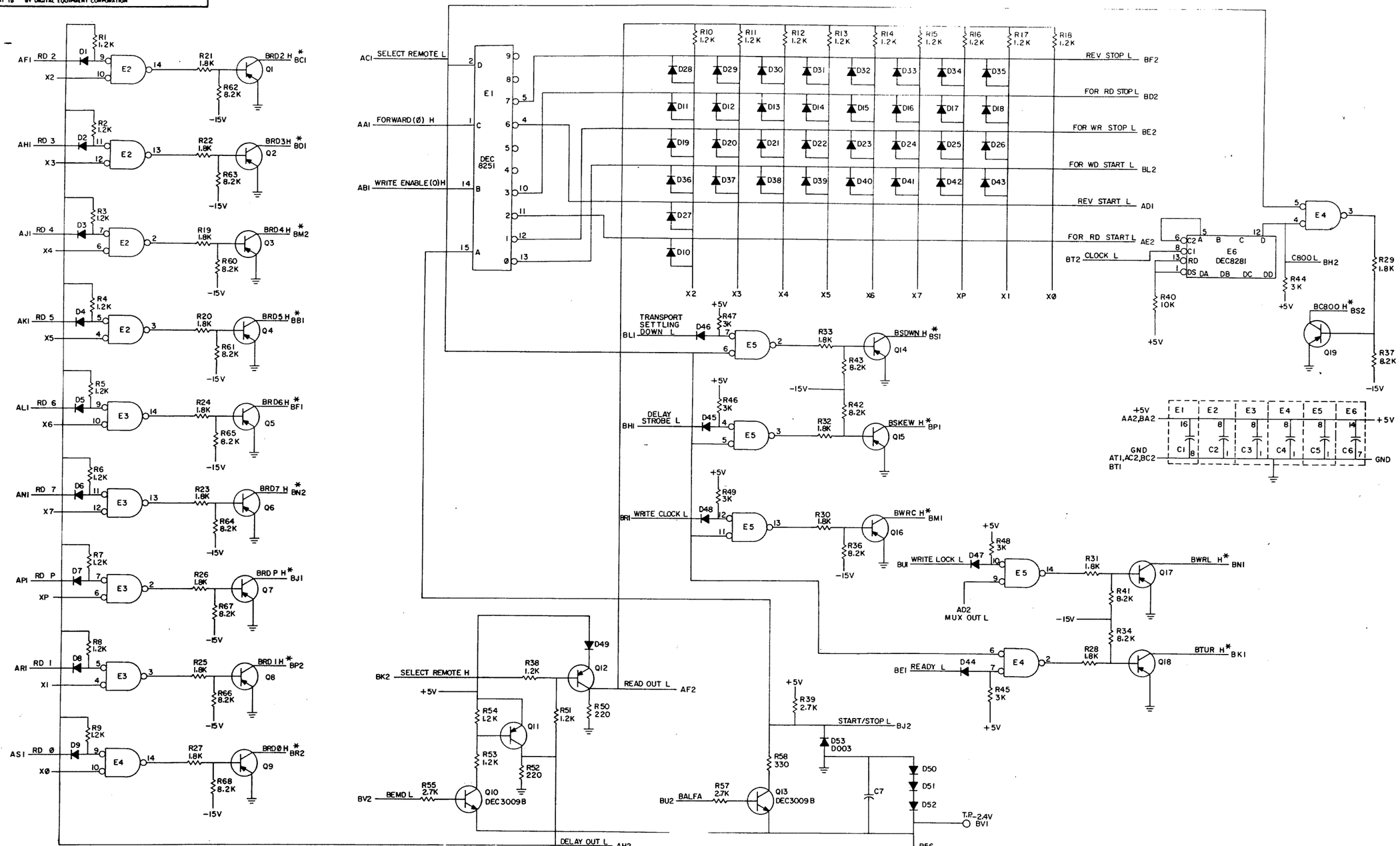

UNLESS OTHERWISE INDICATED:
RESISTORS ARE 1/4W, 5%
TRANSISTORS ARE DEC6534B
DIODES ARE D664
CAPACITORS ARE .01 UF, 100V, 20%
IC'S ARE SP 384

NOTE:
* NEGATIVE LOGIC SIGNALS
EG. L = —3V
H = 0V

REVISIONS		
CHG ENGINEERING	REV	
	D	
00001		
00002	E	
00003	F	

DRN J. Cooper DATE 11/1/71
CHK'D DATE
ENG DATE
PROD DATE

TRANSISTOR & DIODE CONVERSION CHART

DEC	EIA	DEC	EIA
D664	IN3606	DEC3639B	NONE
D003	IN994	DEC30098	2N3009 B
DEL=534B	MPS6534		

digital EQUIPMENT CORPORATION MAYNARD, MASSACHUSETTS

TITLE DELAY TRANSMITTER M768

SIZE	CODE	NUMBER	REV.
D	CS	M768-0-1	F

PRINTED CIRCUIT REV E

SIZE D CODE CS NUMBER M768-0-1 REV F

DEC FORM NO. 998 116