THIS SCHEMATIC IS FURNISHED ONLY FOR TEST AND MAINTENANCE PURPOSES. THE CIRCUITS ARE PROPRIETARY IN NATURE AND SHOULD BE TREATED ACCORDINGLY
COPYRIGHT 1971 BY DIGITAL EQUIPMENT CORPORATION

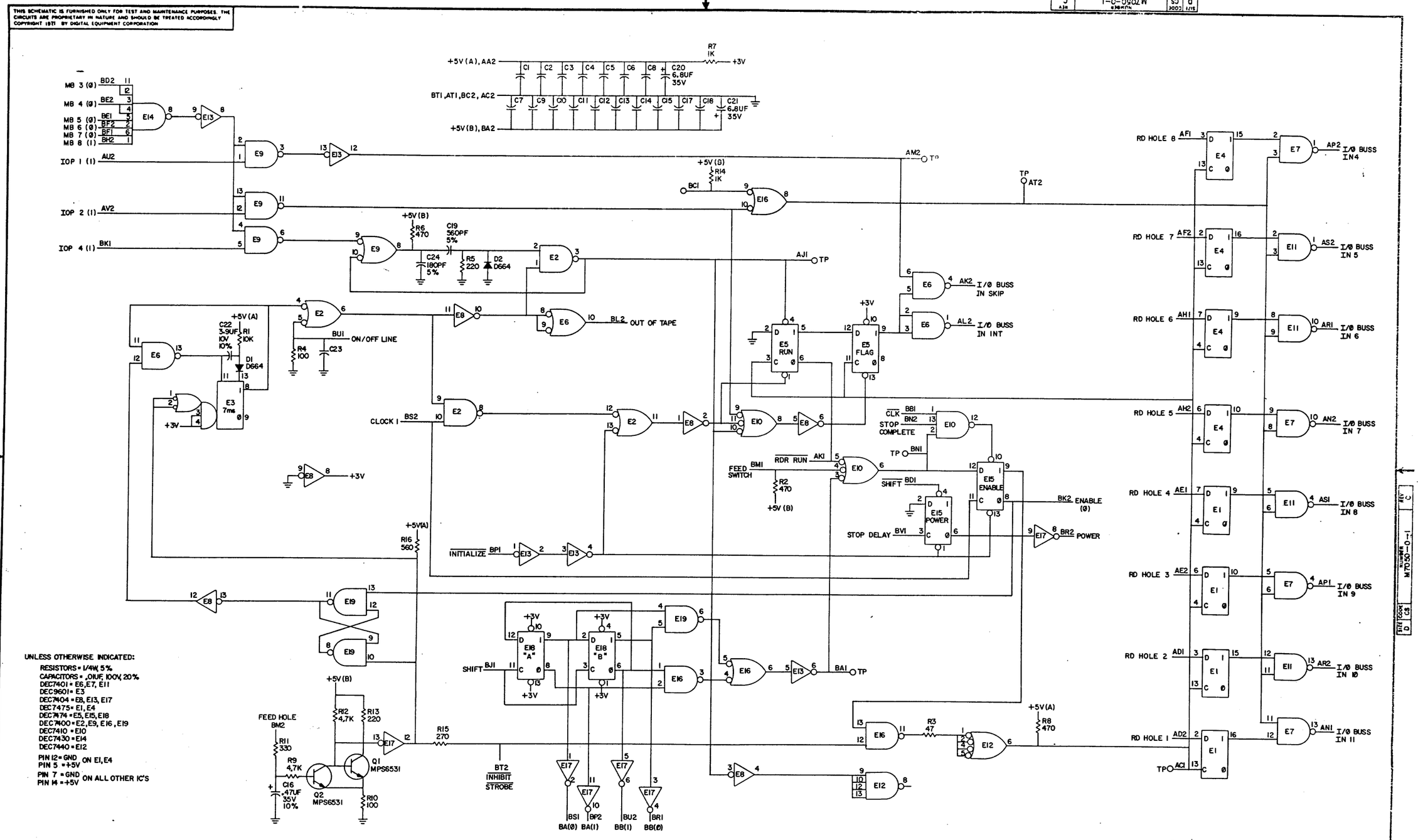

REVISIONS		
CHG	CHG NO.	REV
	30001	C

DRN Wally Moore DATE 2/12/71
CHKD DATE 2-24-71
ENG DATE
PROD DATE

TRANSISTOR & DIODE CONVERSION CHART

DEC	EIA	DEC	EIA
MPS6531	MPS6531	D664	1N3606

digital EQUIPMENT CORPORATION MAYNARD, MASSACHUSETTS

TITLE READER CONTROL

SIZE	CODE	NUMBER	REV
D	CS	M7050—0—1	C

PRINTED CIRCUIT REV. D

DEC FORM NO. 200 1H3

SIZE D CODE CS NUMBER M7050—0—1 REV C