THIS SCHEMATIC IS FURNISHED ONLY FOR TEST AND MAINTENANCE PURPOSES. THE CIRCUITS ARE PROPRIETARY IN NATURE AND SHOULD BE TREATED ACCORDINGLY
COPYRIGHT 1971 BY DIGITAL EQUIPMENT CORPORATION

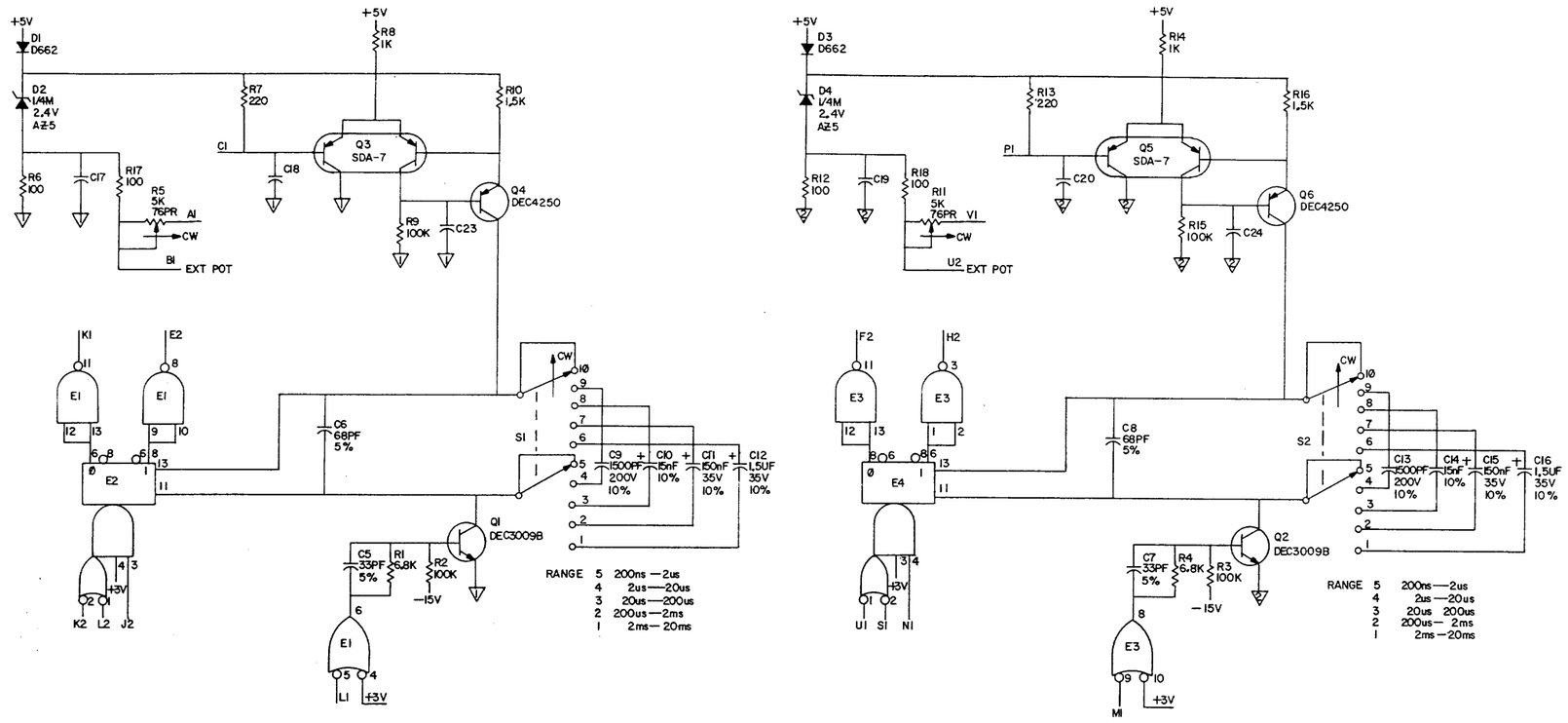


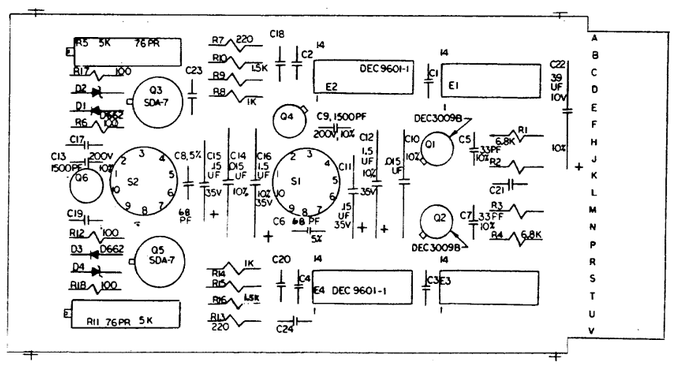


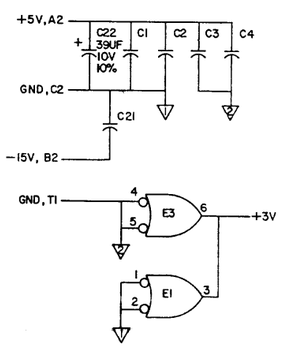


UNLESS OTHERWISE INDICATED:
CAPACITORS = .01UF, 100V, 20%
RESISTORS = 1/4W, 5%
S1, S2 = SPECTROL 82-21-25
E1, E3 = DEC1074H00
E2, E4 = DEC9601-1

PIN 7 = GND
PIN 14 = +5V
ON ALL IC'S

| ITEM NO. | DEC PART NO. | DESCRIPTION | QTY |
|---|---|---|---|
| 29 | 9008337-06 | HANDLE, FLIP CHIP - MAGENTA | 1 |
| 28 | 9006732 | EYELET #GS4-7 | 2 |
| 27 | 1910407 | I.C. DEC 9601-1 | 2 |
| 26 | 1910462 | I.C. DEC1074H00 | 2 |
| 25 | 1509142 | TRANSISTOR 2N4250 | 2 |
| 24 | 1403100 | TRANSISTOR DEC 3009B | 2 |
| 23 | 1501901 | TRANSISTOR SDA-7-S | 2 |
| 22 | 1309143-09 | POTENTIOMETER 5K 76PR 3/4W 10% | 2 |
| 21 | 1302466 | RES. 100K 1/4W 5% | 4 |
| 20 | 1301423 | RES. 6.8K 1/4W 5% | 2 |
| 19 | 1300391 | RES. 1.5K 1/4W 5% | 2 |
| 18 | 1300365 | RES. 1K 1/4W 5% | 2 |
| 17 | 1300271 | RES. 220 1/4W 5% | 2 |
| 16 | 1300229 | RES. 100 1/4W 5% | 4 |
| 15 | 1209806 | SWITCH, SPECTROL 87-21-25 | 2 |
| 14 | 1101938 | DIODE 1/4W 2.4 A25 | 2 |
| 13 | 1100113 | DIODE D662 | 2 |
| 12 | 1009725 | CAP. 1.5UF 35V 10% | 2 |
| 11 | 1002630 | CAP. .015UF 100V 10% | 2 |
| 10 | 1002180 | CAP. .15UF 35V 20% | 2 |
| 9 | 1001610 | CAP. .01UF 100V 20% | 11 |
| 8 | 1000076 | CAP. 39UF 10V 10% | 1 |
| 7 | 1000054 | CAP. 1500PF 200V 10% | 2 |
| 6 | 1000014 | CAP. 68PF 100V 5% | 2 |
| 5 | 1000009 | CAP. 33PF 100V 5% | 2 |
| 4 | 5009544 | ETCHED CIRCUIT BOARD | 1 |
| 3 | B-MM-M3070-0-6 | MODULE ECO HISTORY | |
| 2 | C-AE-M3070-0-5 | ASSY/DRILLING HOLE LAYOUT | |
| 1 | K-CC-M3070-0-4 | X-Y COORDINATE HOLE LOCATION | |

| REVISIONS | | | |
|---|---|---|---|
| CHG | CHG NO | REV | |
| A | 00001 | C | |
| | | | DREW |

ORN: NANCY MOORE DATE 9-2-71
CHK'D DATE
ENG DATE
PROD DATE

TRANSISTOR & DIODE CONVERSION CHART

| DEC | EIA | DEC | EIA |
|---|---|---|---|
| D662 | 1N645 | A25 | 1N4370 |
| DEC4250 | 2N4250 | SDA-7 | |
| DEC3009B | 2N3009 | | |

digital EQUIPMENT CORPORATION MAYNARD, MASSACHUSETTS

TITLE: INTEGRATING ONE SHOT

| SIZE | CODE | NUMBER | REV |
|---|---|---|---|
| D | CS | M3070-0-1 | C |

PRINTED CIRCUIT REV. C

DEC FORM NO. DRD 118