THIS SCHEMATIC IS FURNISHED ONLY FOR TEST AND MAINTENANCE PURPOSES. THE CIRCUITS ARE PROPRIETARY IN NATURE AND SHOULD BE TREATED ACCORDINGLY.
COPYRIGHT 1968 BY DIGITAL EQUIPMENT CORPORATION

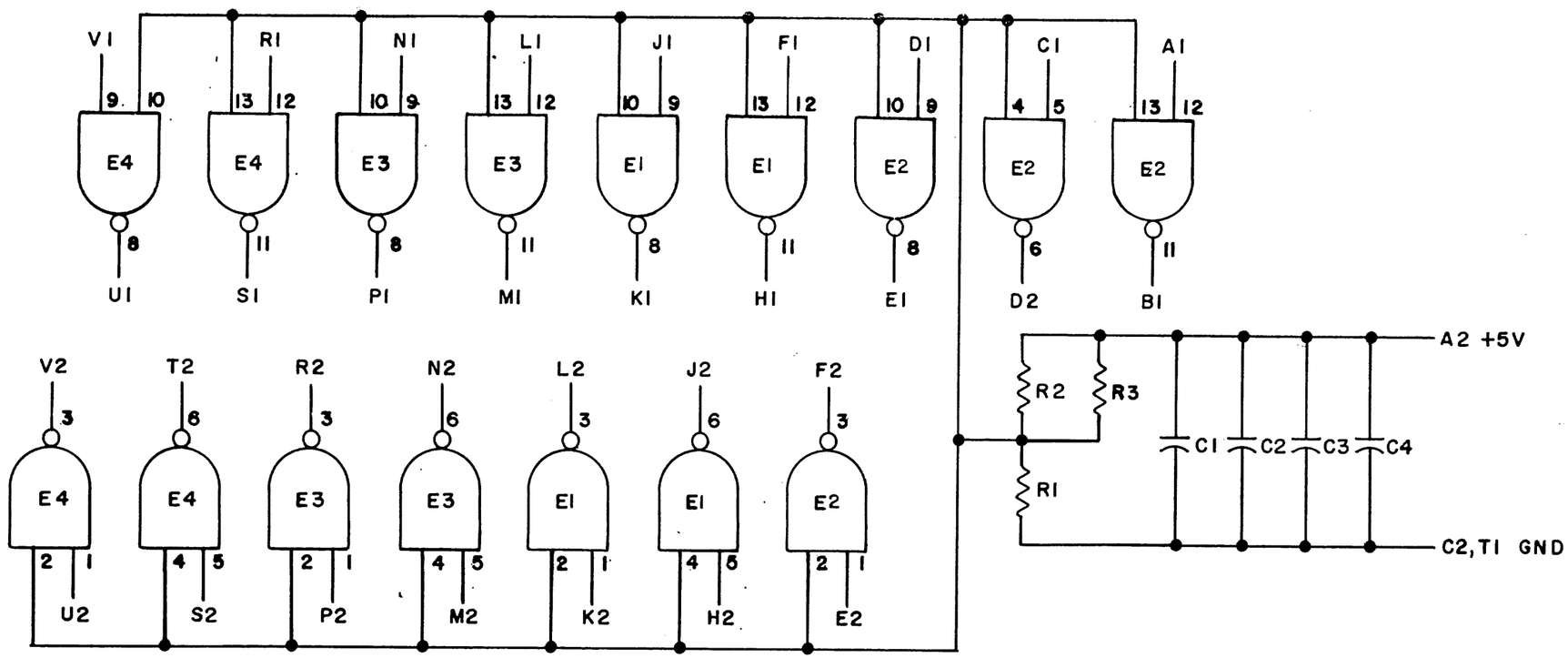

NOTES:
PIN 7 ON EACH IC = GND
PIN 14 ON EACH IC = +5V

REFERENCE DESIGNATION	DESCRIPTION	PART NO.
E1-E4	INTEGRATED CKT. DEC7400N	1905575
R1-R3	RES. 750 1/4W 5% CC	1301401
C1-C4	CAP. .01MFD 100V 20% DISC	1001610
	PARTS LIST	A-PL-M111-0-0

PARTS LIST

REVISIONS		
CHK	CHG NO.	REV.
	00001	A

DRN.	M. Waller	DATE 5-31-68
CHK'D	M. Waller	DATE 6/11/68
ENG.	John Eggert	DATE 7/5/68
PROD.		DATE

TRANSISTOR & DIODE CONVERSION CHART

DEC	EIA	DEC	EIA

digital EQUIPMENT CORPORATION
MAYNARD, MASSACHUSETTS

TITLE
INVERTER M111

SIZE	CODE	NUMBER	REV.
B	CS	M111-0-1	A

PRINTED CIRCUIT REV. C

DIST 434 | 435 | 324

DEC FORM NO.
DRB 102

SIZE B | CODE CS | NUMBER M111-0-1 | REV. A