THIS SCHEMATIC IS FURNISHED ONLY FOR TEST AND MAINTENANCE PURPOSES. THE CIRCUITS ARE PROPRIETARY IN NATURE AND SHOULD BE TREATED ACCORDINGLY.
COPYRIGHT 1967 BY DIGITAL EQUIPMENT CORPORATION

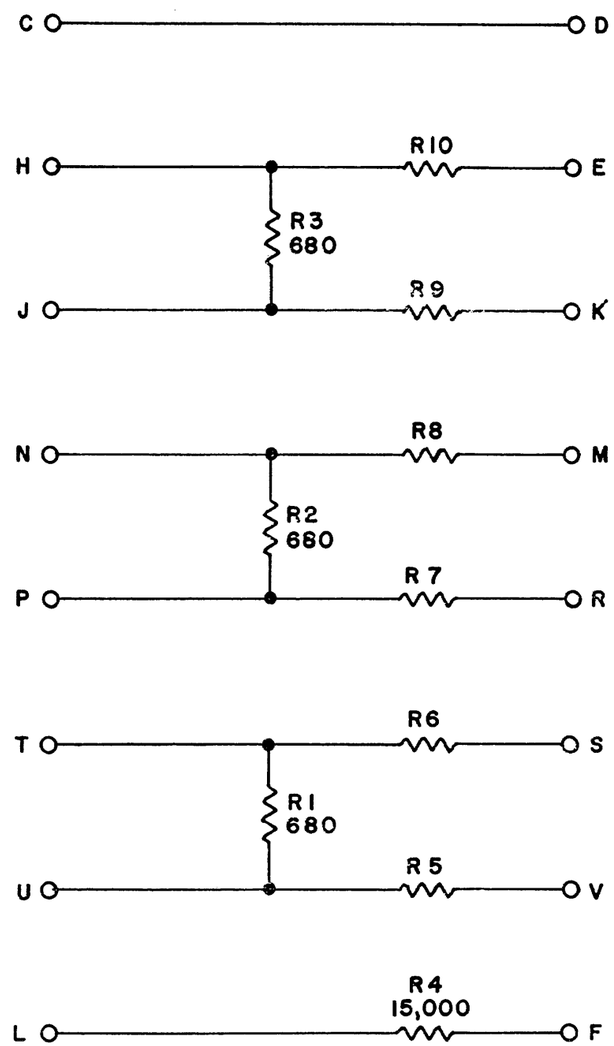

UNLESS OTHERWISE INDICATED:
RESISTORS ARE 1,000
RESISTORS ARE 1/4W, 5%

PARTS LIST A-PL-G706-0-0

REVISIONS			
REV.		DRN. Mr. Haller	DATE 10-12-67
CHG NO.		CHK'D	DATE
CHK		ENG. D Grove	DATE 10/16/67
		PROD.	DATE

TRANSISTOR & DIODE CONVERSION CHART

DEC	EIA	DEC	EIA

digital EQUIPMENT CORPORATION
MAYNARD, MASSACHUSETTS

TITLE DECTAPE ATTENUATOR G706

SIZE	CODE	NUMBER	REV.
B	CS	G706-0-1	A

PRINTED CIRCUIT REV. A B

PINK PRINT. DIST. 324 434

DEC FORM NO.
DRB 102

SIZE B | CODE CS | NUMBER G706-0-1 | REV. A