digital

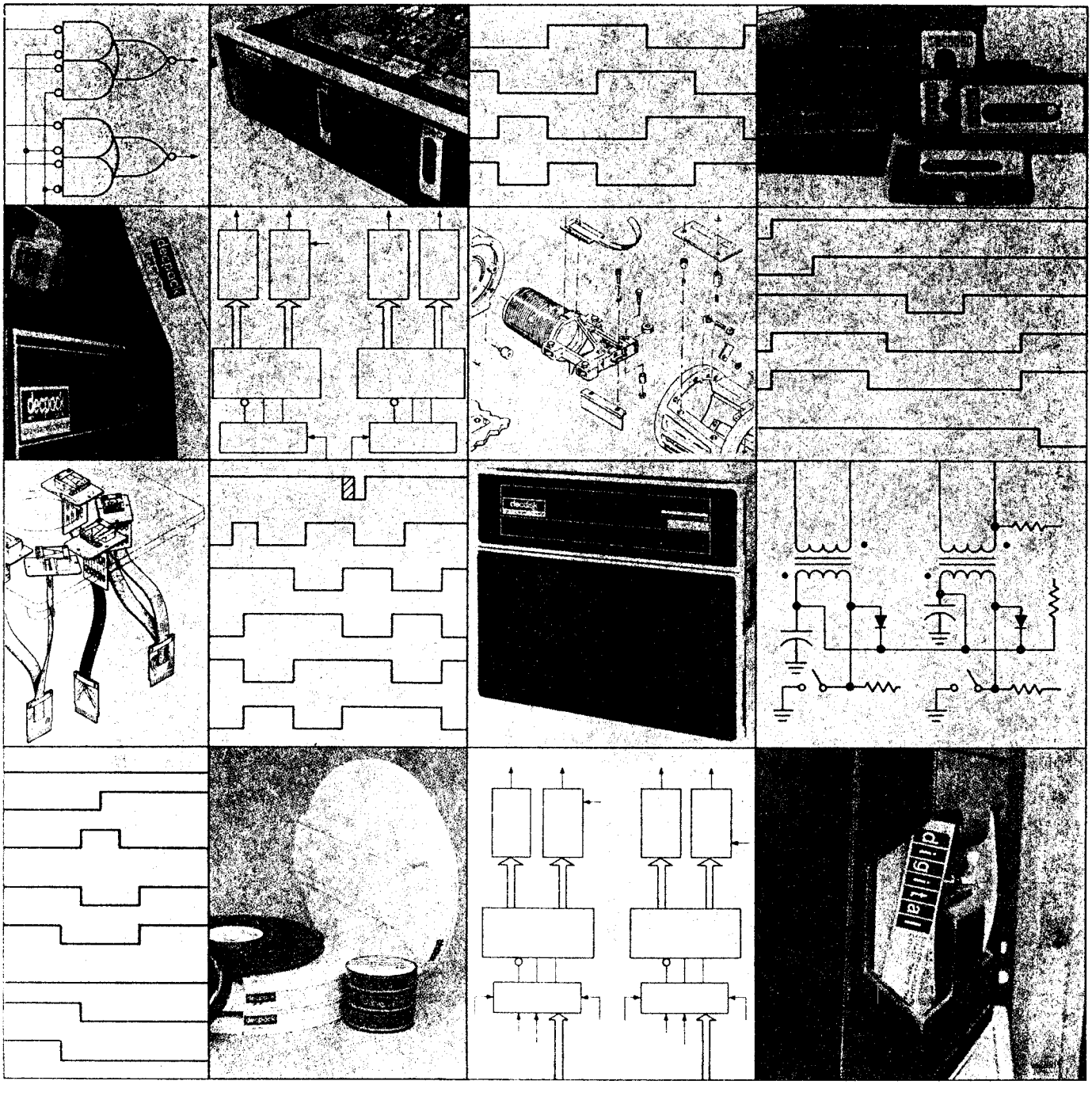

digital equipment corporation · maynard, massachusetts

VT05 alphanumeric display terminal reference manual

DEC-00-H4AC-D

digital equipment corporation · maynard, massachusetts

1st Printing June 1971
2nd Printing (Rev) June 1972
3rd Printing February 1973
4th Printing September 1973

Copyright © 1971, 1972, 1973 by Digital Equipment Corporation

The material in this manual is for informational purposes and is subject to change without notice.

The following are trademarks of Digital Equipment Corporation, Maynard, Massachusetts:

DEC	PDP
FLIP CHIP	FOCAL
DIGITAL	COMPUTER LAB

CONTENTS

		Page
CHAPTER 1	VT05 BASIC DESCRIPTION	
1.1	Purpose and Use	1-1
1.2	Technical Characteristics	1-2
1.2.1	Character Set	1-2
1.2.2	System Interface	1-6
1.3	VT05 Options	1-7
1.4	VT05 Interfacing Information	1-7
CHAPTER 2	FUNCTIONAL DESCRIPTION	
2.1	Keyboard	2-1
2.2	CRT Display	2-1
2.3	Transmit/Receive Logic	2-2
2.4	Control Logic	2-2
2.5	Recirculating Memory	2-2
2.6	Read-Only Memory/Character Generator	2-3
2.7	Filler Characters Required at High Baud Rates	2-3
CHAPTER 3	TERMINAL OPERATION	
3.1	Introduction	3-1
3.2	Turn-On Procedures	3-4
3.2.1	Local Operation Turn-On Procedure	3-4
3.2.2	Remote Operation Turn-On Procedure	3-5
3.3	Modes of Operation	3-6
3.3.1	LOCAL Mode	3-6
3.3.2	REMOTE Mode	3-6
3.3.3	Full- and Half-Duplex Operation	3-6
3.4	Keyboard Operation	3-7
3.4.1	Control Key Operation	3-7
3.4.2	SHIFT Key Operation	3-7
3.4.3	SHIFT/LOCK Key Operation	3-8
3.4.4	ALT Key Operation	3-8
3.5	Display Operation	3-8
3.5.1	Cursor Left (←)	3-8
3.5.2	Cursor Right (→)	3-8
3.5.3	Cursor Down (↓)	3-8

CONTENTS (Cont)

		Page
3.5.4	Cursor Up (↑)	3-8
3.5.5	HOME	3-9
3.5.6	Horizontal Tab (TAB)	3-9
3.5.7	Erase-to-End-of-Line	3-9
3.5.8	Erase-to-End-of-Screen	3-9
3.6	Automatic Functions	3-9
3.6.1	Automatic Scrolling	3-10
3.6.2	Automatic Cursor Advance	3-10
3.6.3	End-of-Line Tone	3-10
3.7	Display Erase	3-10
3.7.1	Individual Character Deletion	3-11
3.7.2	Direct Character Replacement	3-11
3.7.3	Erase-to-End-of-Line and Erase-to-End-of-Screen	3-11
3.8	Direct Cursor Addressing (CAD)	3-11
3.9	Preventive Maintenance	3-13
3.9.1	Cleaning the VT05	3-13
3.9.2	Relocating the VT05	3-13
3.9.3	Maintenance	3-13

ILLUSTRATIONS

Figure No.	Title	Art No.	Page
1-1	VT05 Basic Block Diagram	CP-0134	1-1
1-2	VT05 Functional Block Diagram	CP-0136	1-7
1-3	Typical VT05 EIA Interfacing		1-8
1-4	Typical VT05 TTY (20 mA) Interfacing		1-8
2-1	VT05 Keyboard		2-2
3-1	VT05 Rear Panel Connectors and Controls		3-3
3-2	LOCAL/REMOTE and FULL/HALF-DUPLEX Operation	CP-0135	3-6
3-3	Direct Cursor Addressing Worksheet		3-15

TABLES

Table	Title	Page
1-1	VT05 Transmit Codes - Full ASCII Operation	1-3
1-2	VT05 Transmit Codes - Half ASCII Operation	1-4
1-3	VT05 Receiving Codes	1-5
1-4	VT05 Nondisplayed Control Character Functions	1-6
1-5	VT05 EIA Transmit/Receive Connector Pin Assignments	1-8
1-6	VT05 Teletypewriter Connector Pin Assignments	1-8
3-1	VT05 Controls and Indicators	3-1
3-2	Baud Rate Selector Switch Positions	3-4
3-3	VT05 Line and Column Direct Cursor Addressing Codes	3-12

FOREWORD

This manual describes the purpose and use of the VT05 Alphanumeric Display Terminal. In-depth theory of operation and maintenance procedures are described in the VT05 Alphanumeric Display Terminal Maintenance Manual, DEC-00-H4BB-D.

Chapter 1 is a brief description of the purpose and use of the VT05 Alphanumeric Display Terminal.

Chapter 2 is a functional description of the components of the terminal.

Chapter 3 is a description of the terminal operation, including turn-on procedures, modes of operation, keyboard operation, display operation, automatic functions, and maintenance procedures.

CHAPTER 1
VT05 BASIC DESCRIPTION

1.1 PURPOSE AND USE

The VT05 Alphanumeric Display Terminal, consisting of a CRT display and self-contained keyboard, can be used as a peripheral I/O device with a computer or as a stand-alone closed-circuit television monitor (see Figure 1-1). In computer applications, the VT05 (with system software) can be used to compose, edit, and forward messages to the computer; retrieve and update alphanumeric data contained in the computer files; receive instructions and data from the processor; and perform on-line debugging. When performing these functions, the VT05 operates similarly to a teletypewriter, except that it is a soft copy device. The advantages of using the VT05 are: it is faster, quieter, more compact, easier to maintain, and considerably more reliable than an electromechanical teletypewriter.

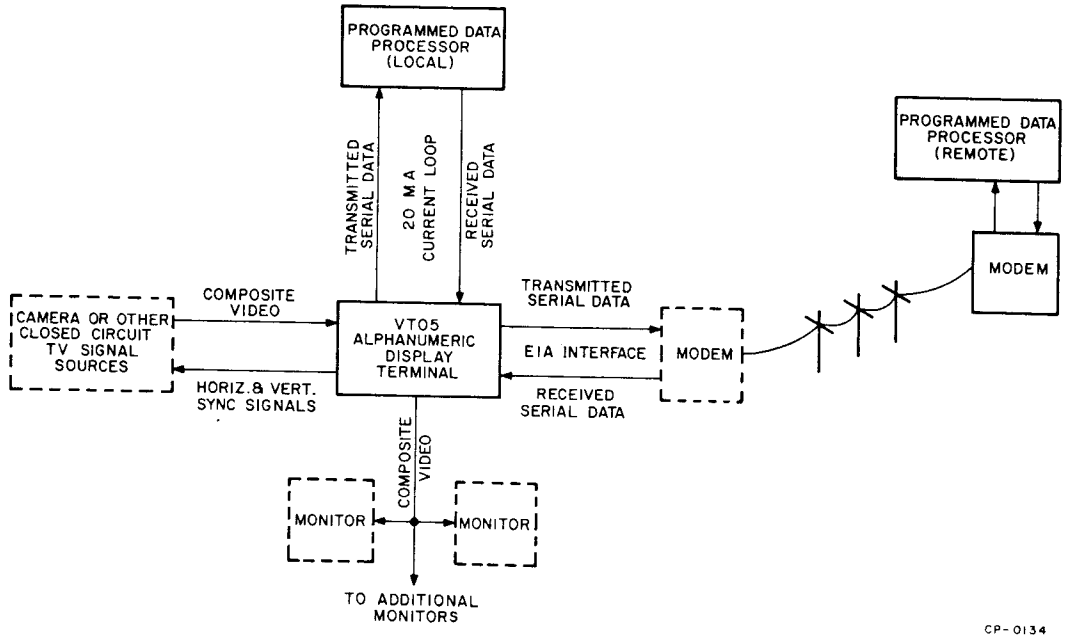

Figure 1-1 VT05 Basic Block Diagram

The full capacity of the VT05 buffer and display is 20 lines, each containing 72 characters, for a total of 1440 characters (full screen).

The VT05 is a raster-type display that is compatible with Electronics Industries Association (EIA) standards (refer to Paragraph 1.2.2); thus, it allows characters and video pictures originating from a closed-circuit television source to be displayed with LOCAL- or computer-generated alphanumeric text (REMOTE) superimposed on the picture. With closed-circuit television compatibility, the VT05 can display graphic information originating from a scan conversion-type device and can interface with other closed-circuit television-compatible devices such as electronic cameras and scanned microscopes. A further advantage of the raster scan display technique employed in the VT05 is that several standard television monitors can be connected to it, via 75Ω video cables, to provide a multiple remote monitoring capability.

NOTE

At present, external video equipment is not supplied by DEC; therefore, before connecting external video equipment to the VT05, the customer should contact DEC Computer Special Systems (CSS) for further information pertaining to VT05 closed-circuit television applications. DEC will not be responsible for degraded performance in the VT05 Alphanumeric Display Terminal caused by external video equipment supplied by the customer unless the CSS Group has, by prior written agreement, approved the use of such equipment not manufactured or supplied by DEC in combination with the VT05.

1.2 TECHNICAL CHARACTERISTICS

1.2.1 Character Set

The VT05 keyboard transmits character codes asynchronously in accordance with U.S. ASCII x 3.15-1966 Bit Sequencing Standard. The keyboard can transmit either full ASCII or a 97-character subset. The selected code is determined by an internal selector switch. With the switch set to position 1, the keyboard transmits the full ASCII character set listed in Table 1-1. With the internal switch set to position 2, the keyboard transmits the 97-character ASCII subset listed in Table 1-2.

The VT05 CRT display does not display lower case alphabetical characters. However, it can receive both upper and lower case characters, which are interpreted and displayed as upper case characters, as listed in Table 1-3. The VT05 uses 13 control characters or functions that are also not displayed. The 13 control characters are listed in Table 1-4.

Table 1-1
VT05 Transmit Codes - Full ASCII Operation
(switch in position 1)

Bit No. 7 6 5 4 3 2 1	0 0 0	0 0 1	0 1 0	0 1 1	1 0 0	1 0 1	1 1 0	1 1 1
0 0 0 0			space	0	@	P	`	p
0 0 0 1			!	1	A	Q	a	q
0 0 1 0			"	2	B	R	b	r
0 0 1 1			#	3	C	S	c	s
0 1 0 0			$	4	D	T	d	t
0 1 0 1			%	5	E	U	e	u
0 1 1 0			&	6	F	V	f	v
0 1 1 1			'	7	G	W	g	w
1 0 0 0	C← (BS)	C→	(	8	H	X	h	x
1 0 0 1	HT		)	9	I	Y	i	y
1 0 1 0	LF	C↑	*	:	J	Z	j	z
1 0 1 1	C↓	ALT	+	;	K	[	k	{
1 1 0 0			,	<	L	\	l	|
1 1 0 1	CR	HOME	-	=	M	]	m	}
1 1 1 0		ERASE LINE	.	>	N	^	n	~
1 1 1 1		ERASE SCREEN	/	?	O	_	o	DEL (rub out)

CTRL

Shifted

Table 1-2
VT05 Transmit Codes - Half ASCII Operation
(switch in position 2)

Bit No. 7 6 5 4 3 2 1	0 0 0	0 0 1	0 1 0	0 1 1	1 0 0	1 0 1	1 1 (0) 0	1 1 (0) 1
0 0 0 0			space	0	@	P	@	P
0 0 0 1			!	1	A	Q	A	Q
0 0 1 0			"	2	B	R	B	R
0 0 1 1			#	3	C	S	C	S
0 1 0 0			$	4	D	T	D	T
0 1 0 1			%	5	E	U	E	U
0 1 1 0			&	6	F	V	F	V
0 1 1 1			'	7	G	W	G	W
1 0 0 0	C← (BS)	C→	(	8	H	X	H	X
1 0 0 1	HT		)	9	I	Y	I	Y
1 0 1 0	LF	C↑	*	:	J	Z	J	Z
1 0 1 1	C↓	ALT	+	;	K	[	K	[
1 1 0 0			,	<	L	\	L	\
1 1 0 1	CR	HOME	-	=	M	]	M	]
1 1 1 0		ERASE LINE	.	>	N	^	N	^
1 1 1 1		ERASE SCREEN	/	?	O	_	O	DEL (rub out)

Shifted

Table 1-3
VT05 Receiving Codes

Bit No. 7 6 5 4 3 2 1	0 0 0	0 0 1	0 1 0	0 1 1	1 0 0	1 0 1	1 1 0	1 1 1
0 0 0 0			space	0	@	P	@	P
0 0 0 1			!	1	A	Q	A	Q
0 0 1 0			"	2	B	R	B	R
0 0 1 1			#	3	C	S	C	S
0 1 0 0			$	4	D	T	D	T
0 1 0 1			%	5	E	U	E	U
0 1 1 0			&	6	F	V	F	V
0 1 1 1	BELL		'	7	G	W	G	W
1 0 0 0	C← (BS)	C→	(	8	H	X	H	X
1 0 0 1	HT		)	9	I	Y	I	Y
1 0 1 0	LF†	C↑†	*	:	J	Z	J	Z
1 0 1 1	C↓†		+	;	K	[	K	[
1 1 0 0			,	<	L	\	L	\
1 1 0 1	CR	HOME†	-	=	M	]	M	
1 1 1 0	CAD†	ERASE LINE	.	>	N	^	N	^
1 1 1 1		ERASE SCREEN†	/	?	O	_	O	

Displayable Character Set

†See filler character requirements (Paragraph 2.7).

Table 1-4
VT05 Nondisplayed Control Character Functions

Control Character	Function
CTRL "G" (Bell)	Produces an audible tone.
†CAD	Direct Cursor Addressing.
TAB	Horizontal Tab.
CR	Carriage Return.
ALT	Alternate Mode.
†LF	Line Feed (if in line 20, causes "scroll").
†HOME	Move cursor to top line, first character position.
ERASE LINE (EOL)	Erase all data from the current cursor position (including data in the cursor position) to the end of the line.
†ERASE PAGE (EOS)	Erase all data on the CRT screen from the current cursor position (including data in the cursor position) to line 20, character position 72.
†C (↑)	Cursor up (one line).
†C (↓)	Cursor down (one line).
C (→)	Cursor right (one space).
C (←) (Backspace)	Cursor left (one space).

†See filler character requirements (Paragraph 2.7).

1.2.2 System Interface

The VT05 is compatible with Electronic Industries Association (EIA) Standards RS-232-C and RS-330. Because most communications interfaces are designed to these standards, the VT05 can easily be installed to directly replace present devices. A single 25-pin Amphenol connector on the rear of the VT05 is used for all EIA input/output signals. In addition, the VT05 can transmit and receive data through its 20-mA current loop interface.

Serial data inputs and outputs are generated and received through the VT05 parallel/serial data, asynchronous transmitter/receiver (see Figure 1-1). Serial data outputs are derived from the keyboard and are output to the data processor via the asynchronous, serial data transmitter at a selectable baud rate. Serial data inputs to the VT05 are input from the processor into an asynchronous receiver where the serial data is converted to parallel and is then applied to the high-speed buffer. Data to be displayed is input to the VT05 memory; control data is input to the VT05 control logic (see Figure 1-2).

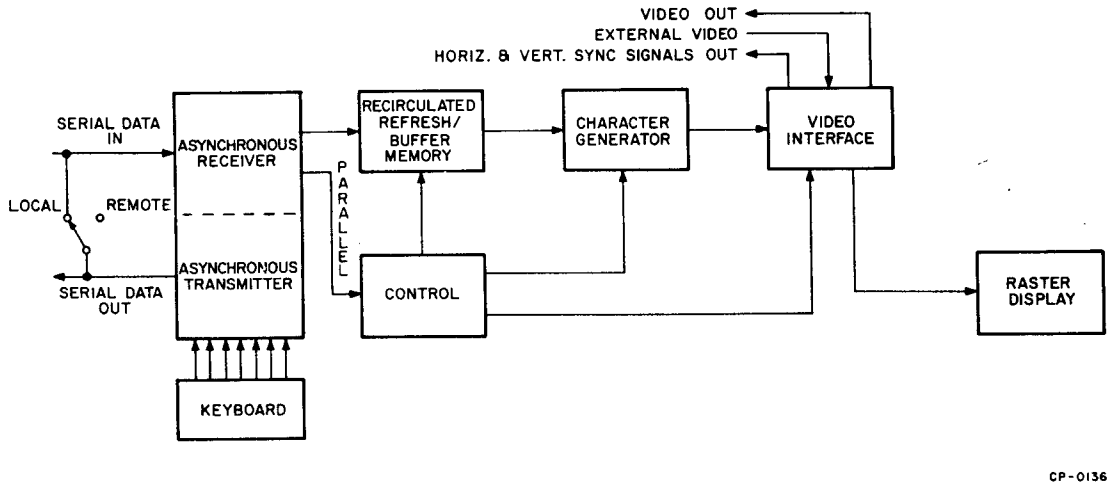

Figure 1-2 VT05 Functional Block Diagram

1.3 VT05 OPTIONS

Optional variations available in the VT05 Alphanumeric Display Terminal are listed below. When ordering a VT05, option information should be included.

VT05 X - X X

- X X:
  - A: 115V; 60 Hz
  - B: 230V; 60 Hz
  - C: 115V; 50 Hz
  - D: 230V; 50 Hz
- X:
  - A: no parity; half ASCII-Keyboard
  - B: no parity; full ASCII-Keyboard
  - C: with parity; half ASCII-Keyboard
  - D: with parity; full ASCII-Keyboard
- X:
  - A: Transmission rates up to 300 baud
  - B: Transmission rates up to 2400 baud

Additional VT05 option information is provided in paragraph 1.4 of the VT05 Alphanumeric Display Console Maintenance Manual.

1.4 VT05 INTERFACING INFORMATION

All VT05 input/output connectors are located on the VT05 rear panel as shown in Figure 1-3. VT05 interfacing information pertaining to the various DEC computers, communications control options, etc., is provided in Figures 1-4 and 1-5, and Tables 1-5 and 1-6. For more detailed VT05 interfacing information, refer to Chapter 2 of the VT05 Alphanumeric Display Terminal Maintenance Manual.

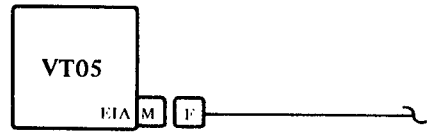

Figure 1-3 Typical VT05 EIA Interfacing

[M] = 25 contact, male plug. Manufacturer's Part No.: Amphenol 17-20250-1, and Cinch DB25P or DB-19604-434. DEC Part No. 12-05886.

[F] = 25 contact, female receptacle. Manufacturer's Part No.: Amphenol 17-10250-1, and Cinch DB25B or DB-19604-443. DEC Part No. 12-04975.

The manufacturer's part no. and DEC Part No. for the hood that is used on both plug and receptacle cable mounted connectors are Cinch DB-51226-1 and DEC 12-5885, respectively.

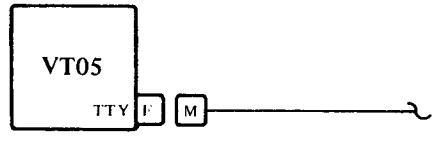

Figure 1-4 Typical VT05 TTY (20 mA) Interfacing

[M] = 8 contact, male plug. Manufacturer's Part No.: Mate-N-Lock 1-480460-0, DEC Part No. 12-09340-00.

[F] = 8 contact, female receptacle, DEC Part No. 12-09340-01.

Table 1-5
VT05 EIA Transmit/Receive Connector Pin Assignments

Pin Number	Description
2	Transmitted Data
3	Received Data
7	Signal Ground (Common Return)
20	Data Terminal Ready

Table 1-6
VT05 Teletypewriter Connector Pin Assignments

Pin Number	Description
1	Unassigned
2	Received Data*
3	Transmitted Data*
4	Reserved
5	Received Data
6	Reserved
7	Transmitted Data
8	Reserved

*Pins 2 and 3 are more negative referenced to pins 5 and 7.

CHAPTER 2
FUNCTIONAL DESCRIPTION

Basically, the VT05 system consists of a keyboard, CRT display, transmit/receive logic, control logic, main memory, character generator/ROM and power supply (see Figure 1-2).

The keyboard transmits an ASCII code directly to the computer each time a key is depressed, and the computer, in turn, transmits the character code to the VT05 control logic. The control logic determines if the received data is to be displayed or used to control the displayed text format. The information or data is sequentially read out of the main memory and applied to the character generator read-only memory (ROM), where the character codes are converted to a 5 x 7 dot matrix and are subsequently displayed as a character. The VT05 continually refreshes the information displayed on the CRT at a constant 50 or 60 Hz rate.

2.1 KEYBOARD

The basic function of the keyboard (see Figure 2-1) is to provide a convenient, on-line means of transmitting U.S. ASCII characters to the processor to be processed and displayed on the VT05 CRT display.

2.2 CRT DISPLAY

The VT05 display allows direct viewing of all displayable characters contained in the VT05 character set that are transmitted from and/or received by the VT05. The display module is a raster-type (television) display of characters as well as video pictures that originate from a closed-circuit television source. CRT inputs that are applied to the read-only memory and used for character generation are derived through the control logic. External video signals are input via a BNC connector located on the rear panel of the VT05. Displayed text is constantly refreshed by the VT05 recirculating memory.

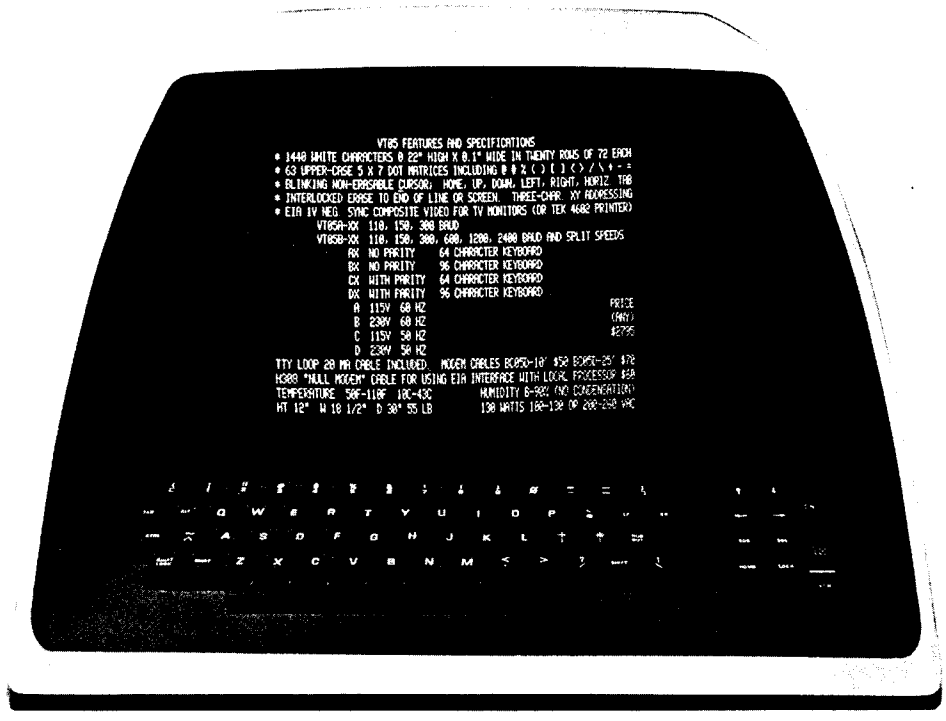

Figure 2-1 VT05 Keyboard

The VT05 can display up to 20 character lines, 72 characters per line, or a maximum of 1440 characters, full-screen. A line feed with the cursor in the bottom line (line 20) will cause the display to "scroll" or move each line up one line position, the top line (previously line 1) will scroll off the display area, and the text contained within that line will be erased from the display refresh memory. A blinking cursor is used to indicate the position of the next character to be generated. The cursor can be moved up, down, left, or right through the use of various control characters; it also moves to the right automatically as it receives each new character.

2.3 TRANSMIT/RECEIVE LOGIC

The basic function of the VT05 transmit/receive logic is to provide parallel-to-serial (output) and serial-to-parallel (input) conversion, special character decoding, and input/output synchronization.

2.4 CONTROL LOGIC

The VT05 control logic provides overall system control, basic timing, and monitoring of input data for control functions such as carriage return, line feed, backspace, move cursor, etc.

2.5 RECIRCULATING MEMORY

The VT05 memory consists of several MOS dynamic shift registers that are organized bit-parallel and character-serial. Memory capacity is 9816 bits. The function of the recirculating memory is to store received data and to continually refresh the VT05 CRT display by addressing the character generator/ROM.

2.6 READ-ONLY MEMORY/CHARACTER GENERATOR

The read-only memory/character generator has a 2240-bit capacity and is capable of generating any of the VT05 displayable ASCII characters. Character codes are continuously received by the ROM from the recirculating memory; the ROM then converts each code into a 5 x 7 dot matrix that is output to be displayed as a character on the CRT display screen. Any lower case codes that are received will be converted to upper case, stored, and then displayed by the terminal as upper case characters. The DEL (rubout) 177_8 code is ignored and no visual indication occurs on the display when this code is received. The complete VT05 displayed character set consists of 26 upper case alphabetical characters, 10 numerals, and 27 symbols as listed in Table 1-3.

2.7 FILLER CHARACTERS REQUIRED AT HIGH BAUD RATES

At speeds above 300 baud, filler characters (or time delay) are required after many of the control characters transmitted to a VT05-B.

Characters Requiring Fillers Above 300 Baud:

Line Feed
Cursor Down
HOME
Cursor Up
Erase Screen
Cursor Y Address

Filler characters should be null (0000000) as a rule, though other characters may be satisfactory if direct cursor addressing is not used. (Fillers after Cursor Y Address must be null to be interpreted correctly.)

Delay required is slightly greater than one full cycle of the AC line. At both 50 Hz and 60 Hz, the number of fillers required to accomplish this is:

2400 baud	4
1200 baud	2
600 baud	1
300 baud or less	none required

CHAPTER 3
TERMINAL OPERATION

3.1 INTRODUCTION

Before operating the VT05, the user should be thoroughly familiar with the information provided in this manual as well as the various controls of the VT05. In addition, the user should always be aware that the VT05 is a television-like device with a cathode ray tube. Use care and good judgment in handling the equipment.

WARNING

The device should never be subjected to severe blows on any surface, and the cover should not be removed nor maintenance performed except by qualified maintenance personnel.

VT05 controls and indicators and their respective functions are listed in Table 3-1.

Table 3-1
VT05 Controls and Indicators

Control or Indicator	Functions
Power ON/OFF Switch	This switch is located on the right front of the VT05. When the ON/OFF switch is turned ON, power is applied to the complete system and the VT05 display refresh memory is cleared. After approximately one minute has elapsed, the cursor should appear in the upper left-hand corner (HOME position) of the screen.
LOCAL/REMOTE Switch	This switch is located on the right front of the VT05. In LOCAL mode, the terminal is off-line and data transmitted from the keyboard is applied back to the VT05 receiver logic by connecting the transmitter output to the VT05 receiver input. In REMOTE mode, keyboard data is transmitted from the VT05 to

(continued on next page)

Table 3-1 (Cont)
VT05 Controls and Indicators

Control or Indicator	Functions
LOCAL/REMOTE Switch (Cont)	the processor while the VT05 is simultaneously receiving data from the processor for entry into the buffer memory (full-duplex operation). When operating in HALF-DUPLEX mode, if inputs are received from both the VT05 transmitter and the computer simultaneously, the two inputs will be mixed or garbled.
FULL/HALF-DUPLEX Switch	This switch is located on the rear of the VT05. In the FULL-DUPLEX position, while keyboard data is transmitted to the computer, the display can concurrently receive data from the computer. In the HALF-DUPLEX position, data is transmitted to the VT05 receiver logic as well as to the computer. In both cases, received data will be recognized and processed by the VT05 (see Figure 3-1). NOTE The terminal display is a raster television device. The CONTRAST, BRIGHTNESS, VERTICAL and HORIZONTAL controls are adjusted in the same way as those of a commercial television receiver.
CONTRAST Control	The CONTRAST control is located on the right-hand side of the VT05 and is used to adjust for picture contrast (clarity).
BRIGHTNESS Control	The BRIGHTNESS control is located on the right-hand side of the VT05 and is used to adjust for CRT display brightness or intensity. NOTE To correctly adjust the VT05 character presentation, turn the CONTRAST control counterclockwise to minimum, then adjust the BRIGHTNESS control decreasing the intensity until the raster brightness is barely intensified (just above the CRT cutoff point). As a final step, adjust the CONTRAST control to the desired level, according to ambient lighting conditions.

(continued on next page)

Table 3-1 (Cont)
VT05 Controls and Indicators

Control or Indicator	Functions
VERTICAL Sync Control	The VERTICAL sync control is located on the right-hand side of the VT05 and is used to properly synchronize the raster in the vertical direction.
HORIZONTAL Sync Control	The HORIZONTAL sync control is located on the right-hand side of the VT05 and is used to adjust the picture for proper synchronization in the horizontal direction.
BAUD RATE SELECTION Switch	This switch is located on the rear of the VT05 and has ten positions (see Figure 3-1). The various switch positions and respective transmit and receive rates are provided in Table 3-2. (NOTE: See filler character requirements, Paragraph 2.7.)

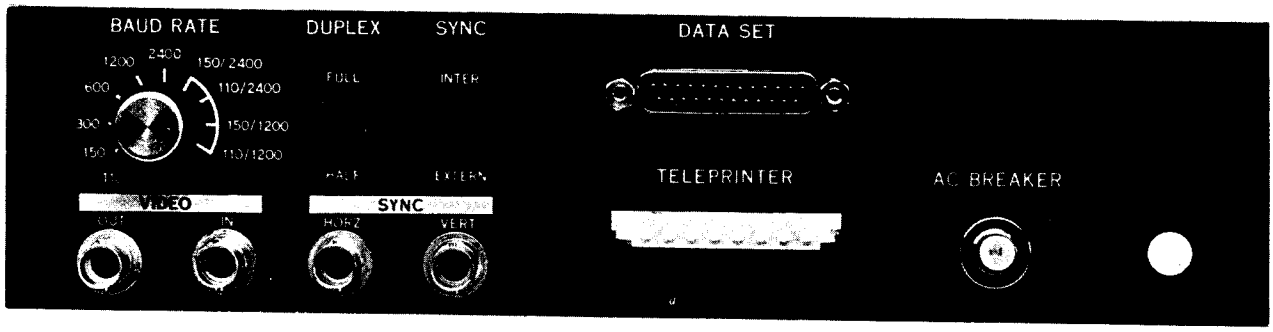

Figure 3-1 VT05 Rear Panel Connectors and Controls

At the 110-baud rate, an 11-unit code consisting of one start bit, seven data bits, one parity bit, and two stop bits is used. A 10-unit code is used for all other baud rates (only one stop bit is used). The parity bit can optionally be set to a "mark" (no parity) or to even parity.

Table 3-2
Baud Rate Selector Switch Positions

Switch Positions	Transmit Rate	Receive Rate
Fully Counterclockwise	110	110
↓	150	150
	300	300
	600*	600*
through	1200*	1200*
	2400*	2400*
↓	150*	2400*
	110*	2400*
	150*	1200*
Fully Clockwise	110*	1200*

*VT05B only; not implemented on VT05A.

3.2 TURN-ON PROCEDURES

Before proceeding with the turn-on procedure, the operator should reread Paragraph 3.1 pertaining to system controls and indicators.

CAUTION

Approximately one minute after the power ON/OFF switch is turned on the screen should display the cursor. Turn power OFF if the cursor does not appear within this time period.

3.2.1 Local Operation Turn-On Procedure

The following procedure is provided for initial turn-on when operating in LOCAL mode. Perform step 3 of this procedure only during installation or initial setup, or in instances when the VT05 must be moved to a different location and a different wall receptacle must be used.

Step	Procedure
1	Ensure the power switch is set to the OFF position.
2	Set the LOCAL/REMOTE switch to the LOCAL position.
3	Check the selected wall receptacle for the correct line voltage. Ensure the line voltage and frequency agree with the line voltage and frequency specified on the rear panel. Insert the power cord into the wall receptacle.
4	Set the power switch to ON; the blinking cursor will appear in the HOME position (the first character position of the first line), and the speaker will "beep" once.

Step	Procedure
5	Allow approximately one minute for CRT filament warmup.
6	If the cursor does not appear as specified, press the HOME key. If the cursor still fails to appear, ensure that the BRIGHTNESS control has not been adjusted too low. If the cursor still fails to appear, turn the terminal off and contact the local DEC Field Service Office.
7	All keyboard functions previously described will be operational. They may be verified individually by pressing each key while observing the screen.

3.2.2 Remote Operation Turn-On Procedure

The following procedure is provided for initial turn-on when operating in REMOTE mode. Perform step 4 of this procedure only during installation or initial setup, or if the VT05 is moved to a different location and a different wall receptacle must be used.

Step	Procedure
1	Ensure that the power switch is set to the OFF position.
2	Set the DUPLEX switch on the rear panel to FULL or HALF according to the requirements of the particular system to which the VT05 is connected.
3	Set the LOCAL/REMOTE switch to the REMOTE position.
4	Check the selected wall receptacle for the correct line voltage and frequency as specified on the rear panel of the VT05. Insert the power cord into the wall receptacle.
5	Set the power switch to the ON position.
6	If Step 5 is performed, allow approximately one minute for CRT filament warmup before continuing. The blinking cursor should appear in the HOME position (upper left-hand corner), and the speaker should "beep" once.
7	If the cursor fails to appear as specified, press the HOME key. Ensure that the BRIGHTNESS adjustment has not been turned down. If the cursor still fails to appear, turn the terminal off and call the local DEC Field Service Office.
8	Set the BAUD RATE switch on the rear panel to the desired position.
9	All keyboard functions and receiver functions previously described will be operational, and the VT05 is set up for "on-line" operation. Correct system operation can be verified by pressing the various control and displayable character keys individually while observing the display.

3.3 MODES OF OPERATION

For normal operation, the LOCAL/REMOTE switch is set to the REMOTE position. The LOCAL mode is provided to enable the VT05 to be operated off-line for training, maintenance, troubleshooting, and alignment purposes.

3.3.1 LOCAL Mode

In LOCAL mode, the terminal is off-line, and the transmitter as well as receiver is disconnected from the external output and input lines. Transmitted data from the keyboard is fed back to the terminal receiver by connecting the terminal (transmitter) output to the terminal (receiver) input (see Figure 3-2). This is accomplished by setting the LOCAL/REMOTE switch to the LOCAL position.

3.3.2 REMOTE Mode

For normal operation, set the LOCAL/REMOTE switch in the REMOTE (on-line) position. In REMOTE mode, with the DUPLEX switch set to FULL, the terminal transmits data from the terminal keyboard directly to the processor while simultaneously receiving data to be entered into the terminal buffer memory. A split-speed capability is provided in the REMOTE mode, because the timing circuits for the input and output data are independent.

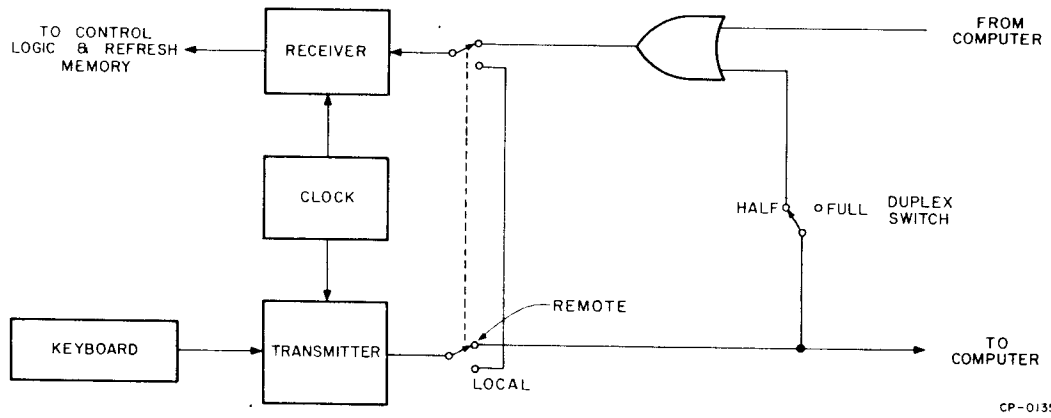

Figure 3-2 LOCAL/REMOTE and FULL/HALF-DUPLEX Operation

3.3.3 Full- and Half-Duplex Operation

The FULL/HALF DUPLEX switch is located on the VT05 rear panel. When the switch is set to the FULL-DUPLEX position, data transmitted from the keyboard will go to the computer only; the data then may be repeated back to the display from the computer. When the switch is set to the HALF-

DUPLEX position, data is transmitted to the display at the same time it is transmitted to the computer. The VT05 control logic then receives the information transmitted from the keyboard as well as from the computer (see Figure 3-2). The operator will have this in the FULL-DUPLEX position for most applications.

3.4 KEYBOARD OPERATION

The basic function of the keyboard is to provide a convenient, on-line means of transmitting U.S. ASCII characters to the processor to be processed and displayed on the VT05 CRT display. The VT05 keyboard relative key positions and key markings are shown in Figure 2-1. The VT05 transmit character sets are provided in Tables 1-1 and 1-2.

3.4.1 Control Key Operation

When the control (CTRL) key is pressed in conjunction with another key, bits 6 and 7 of that particular key code are cleared to zero. The BELL and direct cursor addressing (CAD) functions are derived through the use of the CTRL key, and are two functions that are especially useful. The BELL code or function is generated by pressing the CTRL and "G" keys simultaneously. BELL causes an aural tone or "beep" to be generated by the VT05 speaker each time the BELL code is received. This function is especially useful as an aural indicator to gain the operator's attention, but should be used several times in succession to distinguish between BELL and the end-of-line tone aural indicator.

The CAD function is generated by pressing the CTRL and "N" keys simultaneously. CAD operations and applications are described in detail in Paragraph 3.9.

3.4.2 SHIFT Key Operation

When the SHIFT key is pressed in conjunction with one of the VT05 displayable character keys, bit 6 is complemented if bit 7 is a logical 1 and bit 5 is complemented if bit 7 is a logical 0, and the upper case equivalent of that particular character will be generated; e.g., "!" rather than "1", "A" rather than "a", etc. (see Table 1-1 and Figure 2-1). This rule applies to all characters transmitted from the VT05 except control characters. All VT05 control characters are "SHIFT inhibited".

The (erase) LOCK key serves as an enabling key for the EOL and EOS keys (or functions) and must be pressed simultaneously with the EOL and EOS keys. If the LOCK key is not pressed in conjunction with EOL and EOS, those functions will be inhibited. This arrangement ensures that text on the display screen will not be accidently erased if the operator presses the EOL or EOS key unintentionally.

3.4.3 SHIFT/LOCK Key Operation

When the SHIFT/LOCK key is used in SHIFT operation as described in Paragraph 3.4.2, the SHIFT function will be permanently enabled until the SHIFT/LOCK key is released.

3.4.4 ALT Key Operation

The ALT key is provided as an extra key to allow the operator alternatives, especially in programming applications. The ALT key is more commonly used to allow the programmer an alternate "escape" character code in instances where he does not wish to use carriage return or line feed; ALT may also be used for other functions, according to the particular programming requirements. ALT code is ignored when it is received by the VT05 and has no effect on the display.

3.5 DISPLAY OPERATION

The VT05 control functions are used for format control of the text, display erase applications, and cursor movement.

3.5.1 Cursor Left (←)

Cursor left (010_8) causes the cursor to move left (or backspace) one character space each time the cursor left code is received until the cursor reaches the left-hand margin (first character position). Receipt of the cursor left code after the cursor reaches the left-hand margin has no effect, and the cursor will remain in character position 1 of that particular line.

3.5.2 Cursor Right (→)

Cursor right (030_8) causes the cursor to move right one character space each time the cursor right code is received until the cursor reaches the seventy-second character position of that line; receipt of the code at this point has no effect and the cursor remains in character position 72 until another control character code such as carriage return, line feed, etc., is received.

3.5.3 Cursor Down (↓)

Cursor down (013_8) causes the cursor to move down one line until the cursor reaches the bottom line. Once the cursor is in the bottom line, receipt of the cursor down code has no effect. (See Paragraph 2.7.)

3.5.4 Cursor Up (↑)

Cursor up (032_8) causes the cursor to move up one line until the cursor reaches the top line. Once the cursor has reached the top line, receipt of the cursor up code has no effect. (See Paragraph 2.7.)

3.5.5 HOME

HOME (035_8) causes the cursor to move to the first character position of the first line in the upper left-hand corner of the screen. (See Paragraph 2.7.)

3.5.6 Horizontal Tab (TAB)

TAB (011_8) causes the cursor to move right to the next TAB stop each time the TAB code is received. TAB stops are preset eight character spaces apart. TAB stop locations are at character positions 1, 9, 17, 25, 33, 41, 49, 57 and 65. Once the cursor reaches character position 65, all TAB commands received thereafter will cause the cursor to move only one character position. Once the cursor reaches character position 72, receipt of the TAB code has no effect.

3.5.7 Erase-to-End-of-Line

When the EOL key is pressed, all text from the cursor position (including data in the cursor position) to the end of that particular line will be erased, and the cursor will remain in the current location. For example, if the cursor is located in character position 30 of line 10 and the EOL key is pressed, all text from character position 30 (including character position 30) to character position 72 of line 10 will be erased. Text or characters contained in all other lines will not be affected.

NOTE

The (erase) LOCK key must be pressed at the same time as the EOL and/or EOS key to enable the EOL and EOS codes to be generated. If the (erase) LOCK key is not pressed in conjunction with EOL and EOS, those functions will be inhibited.

3.5.8 Erase-to-End-of-Screen

When the EOS key is pressed, all text from the cursor position (including data in the cursor position) to the end of the screen will be erased, and the cursor will remain in the current location. For example, if the cursor is positioned under character position 7 of line 15 and the EOS key is pressed, all text or data from the cursor position to the end of line 15 and all text or data contained in lines 16-20 will be erased. (See Paragraph 2.7.)

3.6 AUTOMATIC FUNCTIONS

In addition to the control character functions, the VT05 also has three automatic functions: scroll, end-of-line tone, and cursor advance.

3.6.1 Automatic Scrolling

When the cursor is located in the last character line (line 20) and a linefeed code is received the following will occur: all displayed data will move up one line and any data contained in the top line will disappear or "scroll" off the screen, and data contained in this line will be erased from the display refresh memory.

The term "automatic scrolling" should not be construed to mean that text contained on the screen will scroll or move up one line once a character is generated in character position 72 of a given line. Automatic scrolling will not occur if a linefeed is generated with the cursor located in any line other than line 20.

Automatic scrolling is useful for programming applications, especially when a large amount of data is transmitted from the computer to the VT05 to be received and displayed.

3.6.2 Automatic Cursor Advance

When a displayable character is received, the character is displayed and the cursor automatically moves right to the next character location until the cursor reaches character position 72; at this point, received characters will still be displayed by directly replacing the character already in position 72, but it will have no effect on the cursor.

3.6.3 End-of-Line Tone

A speaker in the VT05 generates an aural tone or "beep" on reaching character position 65. This function serves as an end-of-line indication or warning (8 spaces before the end of line).

NOTE

Automatic carriage return or line feed is purposely not used in the VT05; these functions must be included as part of the program. Should automatic carriage return or line feed be required for special applications, contact the DEC Field Service Department.

3.7 DISPLAY ERASE

There are four methods that are used for display erase: character deletion, direct character replacement, erase-to-end-of-line, and erase-to-end-of-screen.

3.7.1 Individual Character Deletion

The first method is erasure of individual characters by using SPACE (040_8). When the cursor is placed under an existing character and the SPACE character code is received, the character will be deleted.

3.7.2 Direct Character Replacement

The second method is replacement of an existing or displayed character with a transmitted character. For example, if the cursor is positioned under an existing character such as "A" and the character "E" is received, "A" will be replaced by "E". Thus, this method uses one-for-one character replacement as opposed to the first method, which deletes the character leaving the character position blank.

3.7.3 Erase-to-End-of-Line and Erase-to-End-of-Screen

The EOL and EOS functions are described in detail in Paragraphs 3.5.7 and 3.5.8.

3.8 DIRECT CURSOR ADDRESSING (CAD)

Through the use of CAD (016_8), the cursor can be directed to any one of the 1440 character locations on the CRT screen using three instructions. The CAD function is used to allow updating of displayed data without retransmitting the complete page. For example, if the cursor is located in character location 55 of line 18 and the operator wishes to update information beginning at character location 35 of line 9, transmission time would be greater if the operator used the cursor control characters, e.g., "cursor up", and "cursor left" to move to the new location. By using the CAD function and the codes shown in Table 3-3, the cursor can be quickly directed to any of the 1440 character locations on the screen. A reduction in generation time is especially noticeable when CAD-generated data is retrieved from memory.

CAD is received by the VT05, and the next two data words are interpreted as the Y- and X-address. The Y-data word presets the Y-address counter to the selected character line, and the X-data word presets the X-address counter to the selected character position in the selected line. Once the cursor is moved to the new location (or address), the cycle is complete and the next data word received will perform its normal function. (See Paragraph 2.7.)

Table 3-3
VT05 Line and Column Direct Cursor Addressing Codes

Line	Character Column	Character Used	Character Column	Character Used	Character Column	Character Used
1	1	space	25	8	49	P
2	2	!	26	9	50	Q
3	3	"	27	:	51	R
4	4	#	28	;	52	S
5	5	$	29	<	53	T
6	6	%	30	=	54	U
7	7	&	31	>	55	V
8	8		32	?	56	W
9	9	(	33	@	57	X
10	10	)	34	A	58	Y
11	11	*	35	B	59	Z
12	12	+	36	C	60	[
13	13	'	37	D	61	\
14	14	-	38	E	62	]
15	15	.	39	F	63	^
16	16	/	40	G	64	
17	17	0	41	H	65	_
18	18	1	42	I	66	a
19	19	2	43	J	67	b
20	20	3	44	K	68	c
	21	4	45	L	69	d
	22	5	46	M	70	e
	23	6	47	N	71	f
	24	7	48	O	72	g

NOTE

The codes for the numbers, symbols, and characters listed in Table 3-3 are the only (legal) codes that can be used for CAD operation. In the Y-axis, any codes that are less than $040_{(8)}$ or greater than $063_{(8)}$ are illegal. In the X-axis, any codes that are less than $040_{(8)}$ or greater than $147_{(8)}$ are illegal. All illegal codes are ignored by the VT05 when the CAD function is used.

The three commands required to move the cursor from character location 55 of line 8 to character location 35 of line 9 are as follows:

Mnemonic	Literal	Octal Code	Function
CAD	CTRL "N"	$016_{(8)}$	Transmits CAD code.
YAD 9	"("	$050_{(8)}$	Defines the Y-address or location (line 9).
XAD 35	"B"	$102_{(8)}$	Defines the X-address or desired character location (location 35).

The character assignments and corresponding line and character locations are listed in Table 3-3. A reproducible Direct Cursor Addressing Worksheet is provided as Figure 3-3.

3.9 PREVENTIVE MAINTENANCE

Periodic preventive maintenance should be performed, and care and good judgment should be exercised to ensure proper equipment operation.

3.9.1 Cleaning the VT05

The exterior surfaces may be cleaned using a damp cloth and a mild detergent. Only a very soft cloth should be used to avoid scratching the protective screen used on the face of the CRT.

The VT05 also contains small air exhaust vents and an internal fan is used to provide constantly circulating air for cooling. These vents must remain clean and unobstructed to allow adequate cooling. Should the vents become obstructed, premature component failure may occur due to an increase in the internal temperature.

3.9.2 Relocating the VT05

If the VT05 is moved from the location at which it is originally installed to a new location, the wall receptacle to be used at the new location should be checked to ensure the line voltage and frequency agree with the requirements specified on the rear panel of the VT05.

3.9.3 Maintenance

If a malfunction occurs, the user should contact the local DEC Field Service Office. The VT05 cover should not be removed nor maintenance performed except by qualified maintenance personnel.

Tab Stops	1							9						17						25						33						41						49						57						65						
Location	1	2	3	4	5	6	7	8	9	10	11	12	13	14	15	16	17	18	19	20	21	22	23	24	25	26	27	28	29	30	31	32	33	34	35	36	37	38	39	40	41	42	43	44	45	46	47	48	49	50	51	52	53	54	55	56	57
Code	SP	!	"	#	$	%	&	'	(	)	*	+	,	-	.	/	0	1	2	3	4	5	6	7	8	9	:	;	<	=	>	?	@	A	B	C	D	E	F	G	H	I	J	K	L	M	N	O	P	Q	R	S	T	U	V	W	X
1	SP																																																								
2	!																																																								
3	"																																																								
4	#																																																								
5	$																																																								
6	%																																																								
7	&																																																								
8	'																																																								
9	(																																																								
10	)																																																								
11	*																																																								
12	+																																																								
13	,																																																								
14	-																																																								
15	.																																																								
16	/																																																								
17	0																																																								
18	1																																																								
19	2																																																								
20	3																																																								

Tab Stops	65																																																								
Location	58	59	60	61	62	63	64	65	66	67	68	69	70	71	72
Code	Y	Z	[	\	]	^	_	`	a	b	c	d	e	f	g
1															
2															
3															
4															
5															
6															
7															
8															
9															
10															
11															
12															
13															
14															
15															
16															
17															
18															
19															
20															

Figure 3-3 Direct Cursor Addressing Worksheet

DIGITAL EQUIPMENT CORPORATION digital WORLDWIDE SALES AND SERVICE

MAIN OFFICE AND PLANT

146 Main Street, Maynard, Massachusetts, U.S.A. 01754 • Telephone: From Metropolitan Boston: 646-8600 • Elsewhere: (617)-897-5111
TWX: 710-347-0212 Cable: DIGITAL MAYN Telex: 94-8457

UNITED STATES

NORTHEAST

REGIONAL OFFICE:
275 Wyman Street, Waltham, Massachusetts 02154
Telephone: (617)-890-0320/0330 TWX: 710-324-6919

WALTHAM
15 Lunda Street, Waltham, Massachusetts 02154
Telephone: (617)-891-1030 TWX: 710-324-6919

CAMBRIDGE/BOSTON
899 Main Street, Cambridge, Massachusetts 02139
Telephone: (617)-491-6130 TWX: 710-320-1167

ROCHESTER
130 Allens Creek Road, Rochester, New York 14618
Telephone: (716)-461-1700 TWX: 710-253-3078

SYRACUSE
5858 East Molloy Road, Rm. 142, Picard Building
Syracuse, New York 13211
Telephone: (315)-455-5987/88

CONNECTICUT
240 Pomeroy Avenue, Meriden, Connecticut 06450
Telephone: (203)-237-8441/7466 TWX: 710-461-0054

MID-ATLANTIC — SOUTHEAST

REGIONAL OFFICE:
U.S. Route 1, Princeton, New Jersey 08540
Telephone: (609)-452-2940 TWX: 510-685-2338

MANHATTAN
810 7th Ave.
New York, N.Y. 10019
Telephone: (212)-582-1300

NEW YORK
95 Cedar Lane, Englewood, New Jersey 07631
Telephone: (201)-871-4984, (212)-594-6955, (212)-736-0447
TWX: 710-991-9721

NEW JERSEY
1259 Route 46, Parsippany, New Jersey 07054
Telephone: (201)-335-3300 TWX: 710-987-8319

PRINCETON
U.S. Route 1
Princeton, New Jersey 08540
Telephone: (609) 452-2940 TWX: 510-685-2338

METUCHEN
195 Main St.
Metuchen, N.J. 08840
Telephone: (201)-549-4100/2000

MID-ATLANTIC — SOUTHEAST (cont.)

LONG ISLAND
1 Huntington Quadrangle
Suite 1SO7 Huntington Station, New York 11746
Telephone: (516)-894-4131, (212)-895-8095

Station Square Three, Paoli, Pennsylvania 19301
Telephone: (215)-647-4900/4410 Telex: 510-668-8395

WASHINGTON
Executive Building
6811 Kenilworth Ave., Riverdale, Maryland 20840
Telephone: (301)-779-1800/752-8797 TWX: 710-826-9662

DURHAM/CHAPEL HILL
Executive Park
3700 Chapel Hill Blvd.
Durham, North Carolina 27707
Telephone: (919)-489-3347 TWX: 510-927-0912

ORLANDO
Suite 130, 7001 Lake Ellenor Drive, Orlando, Florida 32809
Telephone: (305)-851-4450 TWX: 810-850-0180

ATLANTA
2815 Clearview Place, Suite 100,
Atlanta, Georgia 30340
Telephone: (404)-458-3133/3134/3135 TWX: 810-757-4223

KNOXVILLE
6311 Kingston Pike, Suite 21E
Knoxville, Tennessee 37919
Telephone: (615)-588-6571 TWX: 810-583-0123

CENTRAL

REGIONAL OFFICE:
1850 Frontage Road, Northbrook, Illinois 60062
Telephone: (312)-498-2500 TWX: 910-686-0655

PITTSBURGH
400 Penn. Center Boulevard
Pittsburgh, Pennsylvania 15235
Telephone: (412)-243-9404 TWX: 710-797-3657

CHICAGO
1850 Frontage Road, Northbrook, Illinois 60062
Telephone: (312)-498-2500 TWX: 910-686-0655

ANN ARBOR
230 Huron View Boulevard, Ann Arbor, Michigan 48103
Telephone: (313)-761-1150 TWX: 810-223-6053

DETROIT
23777 Greenfield Road, Suite 189
Southfield, Michigan 48075
Telephone: (313)-559-8565

CENTRAL (cont.)

INDIANAPOLIS
21 Beachway Drive — Suite G
Indianapolis, Indiana 46224
Telephone: (317)-243-8341 TWX: 810-341-3436

MINNEAPOLIS
Suite 111, 8030 Cedar Avenue South,
Minneapolis, Minnesota 55420
Telephone: (612)-854-6562-3-4-5 TWX: 910-576-2818

CLEVELAND
25000 Euclid Ave.
Euclid, Ohio 44117
Telephone: (216)-946-8484 TWX: 810-427-2608

KANSAS CITY
532 East 42nd St., Independence, Missouri 64055
Telephone: (816)-461-3440 TWX: 816-461-3100

ST. LOUIS
Suite 110, 115 Progress Parkway, Maryland Heights,
Missouri 63043
Telephone: (314)-878-4310 TWX: 910-764-0831

DAYTON
3101 Kettering Boulevard, Dayton, Ohio 45439
Telephone: (513)-294-3323 TWX: 810-459-1676

MILWAUKEE
8531 W. Capitol Drive, Milwaukee, Wisconsin 53222
Telephone: (414)-463-9110 TWX: 910-262-1199

DALLAS
9855 North Stemmons Freeway, Dallas, Texas 75247
Telephone: (214)-638-4880 TWX: 910-861-4000

HOUSTON
3417 Milam Street, Suite A, Houston, Texas 77002
Telephone: (713)-524-2961 TWX: 910-881-1651

NEW ORLEANS
3100 Ridgelake Drive, Suite 108
Metairie, Louisiana 70002
Telephone: (504)-837-0257

ROCKFORD
500 South Wyma St.
Rockford, Illinois 61101
Telephone: (815)-965-5557

TULSA
3140 S. Winston
Winston Sq. Bldg.
Suite 4
Tulsa, Oklahoma 74135
Telephone: (918)-749-4478

WEST

REGIONAL OFFICE:
310 Soquel Way, Sunnyvale, California 94086
Telephone: (408)-735-9200

SANTA ANA
2110 S. Anne St.
Santa Ana, Calif. 92704
Telephone: (714)-979-2460
F.S. 714-979-2464 TWX 910-391-1189

WEST LOS ANGELES
1510 Cotner Avenue, Los Angeles, California 90025
Telephone: (213)-479-3791/4318 TWX: 910-342-6999

SAN DIEGO
6154 Mission Gorge Road, Suite 110
San Diego, California 92120
Telephone: (714)-280-7880, 7970 TWX: 910-335-1230

SAN FRANCISCO
1400 Terra Bella, Mountain View, California 94040
Telephone: (415)-964-6200 TWX: 910-373-1266

OAKLAND
7850 Edgewater Drive, Oakland, California 94621
Telephone: (415) 635-5453/7830 TWX: 910-366-7238

ALBUQUERQUE
6303 Indian School Road, N.E., Albuquerque, N.M. 87110
Telephone: (505)-296-5411/5428 TWX: 910-989-0614

DENVER
2305 South Colorado Boulevard, Suite #5
Denver, Colorado 80222
Telephone: (303)-757-3332/758-1656/758-1659
TWX: 910-931-2650

SEATTLE
1521 130th N.E., Bellevue, Washington 98005
Telephone: (206)-454-4058/455-5404 TWX: 910-443-2306

SALT LAKE CITY
431 South 3rd East, Salt Lake City, Utah 84111
Telephone: (801)-328-9838 TWX: 910-925-5834

PHOENIX
4358 East Broadway Road, Phoenix, Arizona 85040
Telephone: (602)-268-3488 TWX: 910-950-4691

PORTLAND
Suite 168
5319 S.W. Westgate Drive, Portland, Oregon 97221
Telephone: (503)-297-3761/3765

INTERNATIONAL

EUROPEAN HEADQUARTERS

Digital Equipment Corporation International Europe
81 Route de l'Aire
1211 Geneva 26, Switzerland
Telephone: 42 79 50 Telex: 22 683

FRANCE

Equipment Digital S.A.R.L.
PARIS
327 Rue de Charenton, 75 Paris 12 EME, France
Telephone: 344-76-07 Telex: 21339
GRENOBLE
10 rue Auguste Ravier, F-38 Grenoble, France
Telephone: (76) 87 56 01/02 Telex: 32 882 F (Code 212)

GERMAN FEDERAL REPUBLIC

Digital Equipment GmbH
MUNICH
8 Muenchen 13, Wallensteinplatz 2
Telephone: 0811-35031 Telex: 524-226
COLOGNE
5 Koeln 41, Aachener Strasse 311
Telephone: 0221-40 44 95 Telex: 888-2269
Telegram: Flip Chip Koeln
FRANKFURT
6078 Neu-Isenburg 2
Am Forsthaus Gravenbruch 5-7
Telephone: 06102-5526 Telex: 41-76-82
HANNOVER
3 Hannover, Podbielskistrasse 102
Telephone: 0511-69-70-95 Telex: 922-952
STUTTGART
D-7301 Kernnat
Marco-Polo-Strasse 1
Telephone: (0711) 25 40 07 Telex: 725-3404

AUSTRIA

Digital Equipment Corporation Ges.m.b.H.
VIENNA
Mariahilferstrasse 136, 1150 Vienna 15, Austria
Telephone: 85 51 86

UNITED KINGDOM

Digital Equipment Co., Ltd
U.K. HEADQUARTERS
Arkwright Road, Reading, Berks.
Telephone: 0734-583555 Telex: 84327
READING
The Evening Post Building, Tessa Road
Reading, Berks.
Fountain House
Butts Centre
Reading, RG1 7QN
Telephone: Reading 583555
Telex: 84328
BIRMINGHAM
29/31, Birmingham Road, Sutton Coldfield, Warwicks.
Telephone: (0044) 21-355 5501 Telex: 337 360

6 Upper Precinct, Worsley, Manchester M28 AZ
Telephone: 061-790-8411 Telex: 668666
LONDON
Bilton House, Uxbridge Road, Ealing, London W 5.
Telephone: 01-579-2334 Telex: 22371
EDINBURGH
Shiel House, Craigshill, Livingston,
West Lothian, Scotland
Telephone: 32705 Telex: 727113

NETHERLANDS

Digital Equipment N.V.

Sir Winston Churchilliaan 370
Rijswijk/The Hague, Netherlands
Telephone: 070-995-160 Telex: 32533

BELGIUM

Digital Equipment N.V./S.A.
BRUSSELS
108 Rue D'Arlon
1040 Brussels, Belgium
Telephone: 02-139256 Telex: 25297

SWEDEN

Digital Equipment AB
STOCKHOLM
Englundavagen 7, 171 41 Solna, Sweden
Telephone: 98 13 90 Telex: 170 50
Cable: Digital Stockholm

NORWAY

Digital Equipment Corp. A/S
OSLO
Trondheimsveien 47
Oslo 5, Norway
Telephone: 02/68 34 40 Telex: 19079 DEC N

DENMARK

Digital Equipment Aktiebolag
COPENHAGEN
Hellerupveg 66
2900 Hellerup, Denmark

FINLAND

Digital Equipment AB
HELSINKI
Tiitismaantie 6
SF-00710 Helsinki 71
Telephone: (090) 370133
Cable: Digital Helsinki

SWITZERLAND

Digital Equipment Corporation S.A.
GENEVA
81 Route de l'Aire
1211 Geneva 26, Switzerland
Telephone: 42 79 50 Telex: 22 683
ZURICH
Scheuchzerstrasse 21
CH-8006 Zurich, Switzerland
Telephone: 01/60 35 66 Telex: 56059

ITALY

Digital Equipment S.p.A.
MILAN
Corso Garibaldi 49, 20121 Milano, Italy
Telephone: 872 746 694 394 Telex: 33615

SPAIN

Digital Equipment Corporation Ltd.
MADRID
Ataio Ingenieros S.A., Enrique Larreta 12, Madrid 16
Telephone: 215 35 43 Telex: 27249
BARCELONA
Ataio Ingenieros S.A., Ganduxer 76, Barcelona 6
Telephone: 221 44 66

CANADA

Digital Equipment of Canada, Ltd.
CANADIAN HEADQUARTERS
P.O. Box 11500
Ottawa, Ontario, Canada
K2H 8K8
Telephone: (613)-592-5111 TWX: 610-562-8732

CANADA (cont.)

OTTAWA
P.O. Box 11250
Ottawa, Ontario
K2H 7T9
Telephone: (613)-592-5120 TWX: 610-562-8907
TORONTO
230 Lakeshore Road East, Port Credit, Ontario
Telephone: (416)-274-1241 TWX: 610-492-4306
MONTREAL
9675 Cote de Liesse Road
Dorval, Quebec, Canada 760
Telephone: (514)-636-9393 TWX: 610-422-4124
CALGARY/Edmonton
Suite 140, 6940 Fisher Road S.E.
Calgary, Alberta, Canada
Telephone: (403)-435-4881 TWX: 403-255-7408
VANCOUVER
2210 West 12th Avenue
Vancouver 9, British Columbia, Canada
Telephone: (604)-736-5616 TWX: 610-929-2006

GENERAL INTERNATIONAL SALES

REGIONAL OFFICE
146 Main Street, Maynard Massachusetts 01754
Telephone: (617)-897-5111
From Metropolitan Boston 646-8600
TWX: 710-347-0217/0212
Cable: DIGITAL MAYN
Telex: 94-8457

AUSTRALIA

Digital Equipment Australia Pty. Ltd.
SYDNEY
P.O. Box 491, Crows Nest
N.S.W. Australia 3065
Telephone: 439-2566 Telex: AA20740
Cable: Digital, Sydney
MELBOURNE
60 Park Street, South Melbourne, Victoria, 3205
Telephone: 699-2888 Telex: AA40616
PERTH
643 Murray Street
West Perth, Western Australia 6005
Telephone: 21-4993 Telex: AA92140
BRISBANE
139 Merivale Street, South Brisbane
Queensland, Australia 4101
Telephone: 44-4047 Telex: AA40616
ADELAIDE
6 Montrose Avenue
Norwood, South Australia 5067
Telephone: 63-1339 Telex: AA82825

NEW ZEALAND

Digital Equipment Corporation Ltd.
AUCKLAND
Hilton House, 430 Queen Street, Box 2471
Auckland, New Zealand
Telephone: 75533

JAPAN

Digital Equipment Corporation International
TOKYO
Kowa Building No. 17, Second Floor
2-7 Nishi-Azabu 1-Chome
Minato-Ku, Tokyo, Japan
Telephone: 404-5894/5 Telex: TK-6428

JAPAN (cont.)

Rikei Trading Co., Ltd. (sales only)
Kozato-Kaikan Bldg.
No. 18-14, Nishiahimbashi 1-chome
Minato-Ku, Tokyo, Japan
Telephone: 5915246 Telex: 781-4208

PUERTO RICO

Digital Equipment Corporation de Puerto Rico
MIRAMAR
American Airlines Bldg.
804 Ponce De Leon, Miramar, Puerto Rico
Telephone: 809-723-8068/67 Telex: 385-9056

ARGENTINA

BUENOS AIRES
Coasin S.A.
Virrey del Pino 4071, Buenos Aires
Telephone: 52-3185 Telex: 012-2284

BRAZIL

RIO DE JANEIRO — GB.
Ambriex S.A.
Rua Ceará, 104, 2.° e 3.° andares
Fones: 221-4560/44, 252-9873
Cable: RAIOCARDIO
SÃO PAULO — SP
Ambriex S.A.
Rua Tupi, 535
Fones: 51-0912, 52-0655, 52-7806
Cable: RAIOCARDIO
PORTO ALEGRE — RS
Ambriex S.A.
Rua Cel. Vicente, 421, 1.° andar
Fones: 24-7411, 24-7696

CHILE

SANTIAGO
Coasin Chile Ltda. (sales only)
Casilla 14588, Correo 15, Santiago
Telephone: 396713 Cable: COACHIL

INDIA

BOMBAY
Hinditron Computers Pvt. Ltd.
69/A, L. Jagmohandas Marg.
Bombay-6 (W.B.), India
Telephone: 38-1615, 36-5344 Telex: 011-2594 Plenty
Cable: Tekhind

MEXICO

MEXICO CITY
Mexitek, S.A.
Eugenia 408 Deptos. 1
Apdo. Postal 12-1012
Mexico 12, D.F.
Telephone: (905) 536-09-10

PHILIPPINES

MANILA
Stanford Computer Corporation
P.O. Box 1608
416 Dasmarinas St., Manila
Telephone: 49-68-96 Telex: 742-0352

VENEZUELA

CARACAS
Coasin, C.A.
Apartado 50939
Sabana Grande No. 1, Caracas 105
Telephone: 72-6662; 72-9637
Cable: INSTRUVEN