THIS SCHEMATIC IS FURNISHED ONLY FOR TEST AND MAINTENANCE PURPOSES. THE CIRCUITS ARE PROPRIETARY IN NATURE AND SHOULD BE TREATED ACCORDINGLY.
COPYRIGHT **1966** BY DIGITAL EQUIPMENT CORPORATION

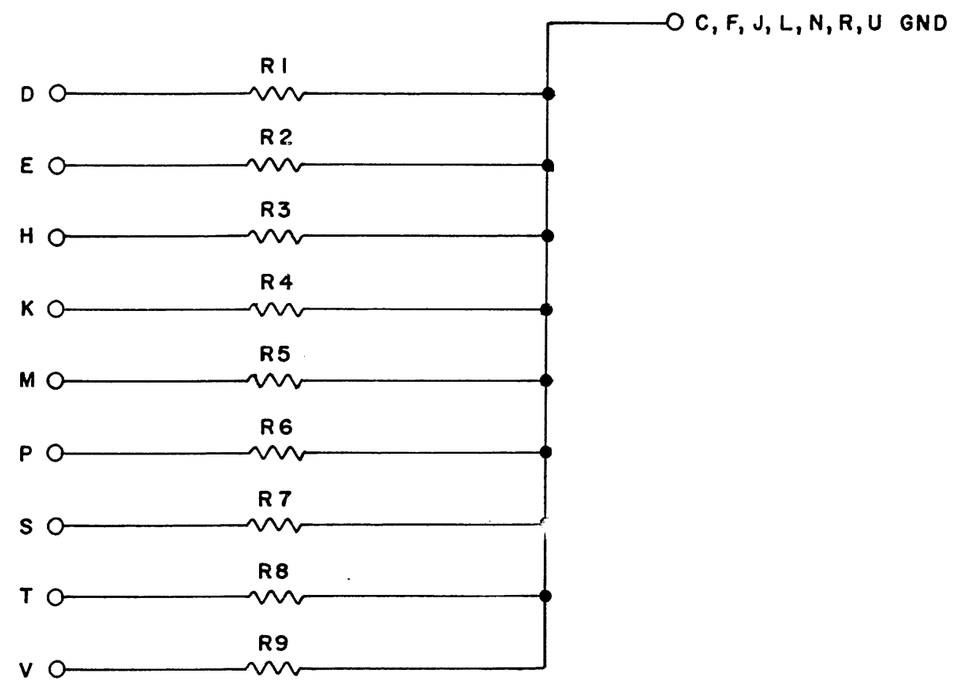

UNLESS OTHERWISE INDICATED:
ALL RESISTORS ARE 100; 1/4W; 5%

REVISIONS		
CHK	CHG NO.	REV.
	6401	A

DRN.	M. Haller	DATE	11-10-66
CHK'D	R. Eckermann	DATE	11/14/66
ENG.	J. E. Kraus	DATE	11-14-66
PROD.		DATE	

TRANSISTOR & DIODE CONVERSION CHART

DEC	EIA	DEC	EIA

digital EQUIPMENT CORPORATION
MAYNARD, MASSACHUSETTS

TITLE
100Ω TERMINATOR G700

SIZE	CODE	NUMBER	REV.
B	CS	G700-0-1	A

PRINTED CIRCUIT REV. B

DEC FORM NO.
DRB 102