THIS SCHEMATIC IS FURNISHED ONLY FOR TEST AND MAINTENANCE PURPOSES. THE CIRCUITS ARE PROPRIETARY IN NATURE AND SHOULD BE TREATED ACCORDINGLY.
COPYRIGHT 1966 BY DIGITAL EQUIPMENT CORPORATION

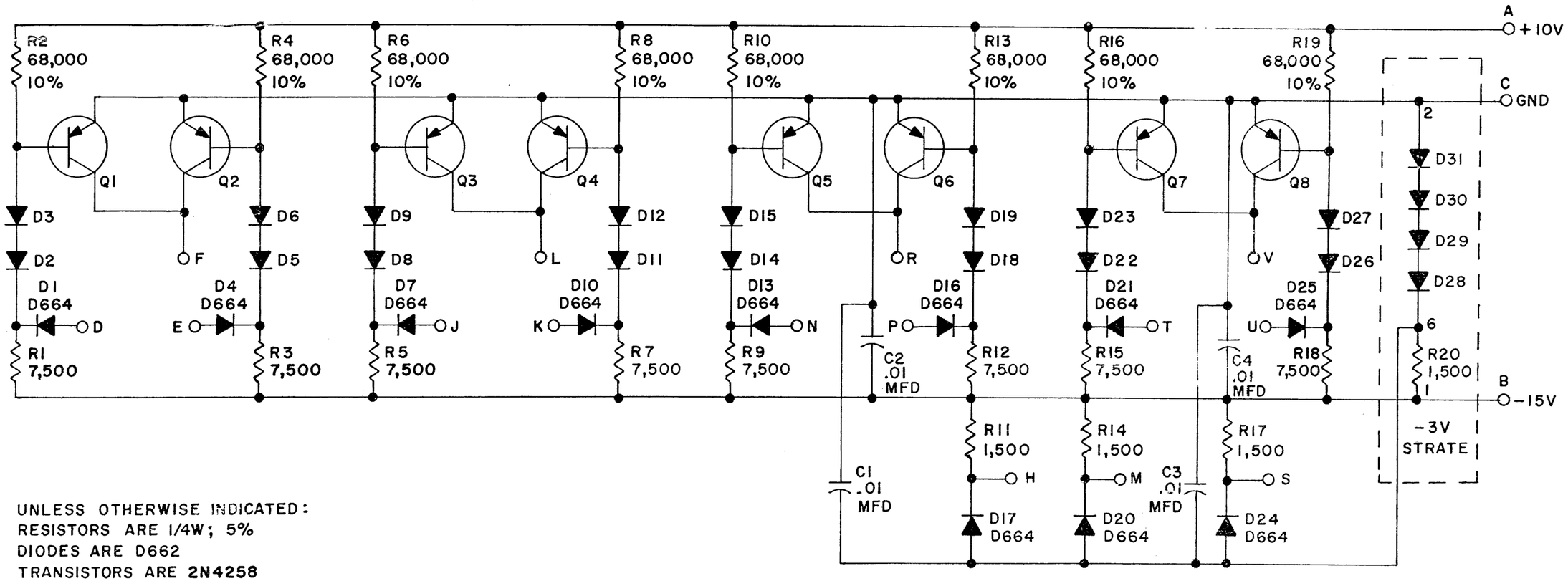

UNLESS OTHERWISE INDICATED:
RESISTORS ARE 1/4W; 5%
DIODES ARE D662
TRANSISTORS ARE 2N4258

REVISIONS		
REV.		A
CHG NO.		5916
CHK		

DRN.	M. Haller	DATE	10-19-66
CHK'D		DATE	11/1/66
ENG.	Allan Kent	DATE	21 Oct 66
PROD.		DATE	

TRANSISTOR & DIODE CONVERSION CHART

DEC	EIA	DEC	EIA
2N4258	2N4258		
D662	IN645		
D664	IN3606		

digital EQUIPMENT CORPORATION
MAYNARD, MASSACHUSETTS

TITLE DIODE GATE B134

SIZE	CODE	NUMBER	REV.
B	CS	B134-0-1	A

PRINTED CIRCUIT REV. B

DEC FORM NO.