THIS SCHEMATIC IS FURNISHED ONLY FOR TEST AND MAINTENANCE PURPOSES. THE CIRCUITS ARE PROPRIETARY IN NATURE AND SHOULD BE TREATED ACCORDINGLY
COPYRIGHT 1971 BY DIGITAL EQUIPMENT CORPORATION

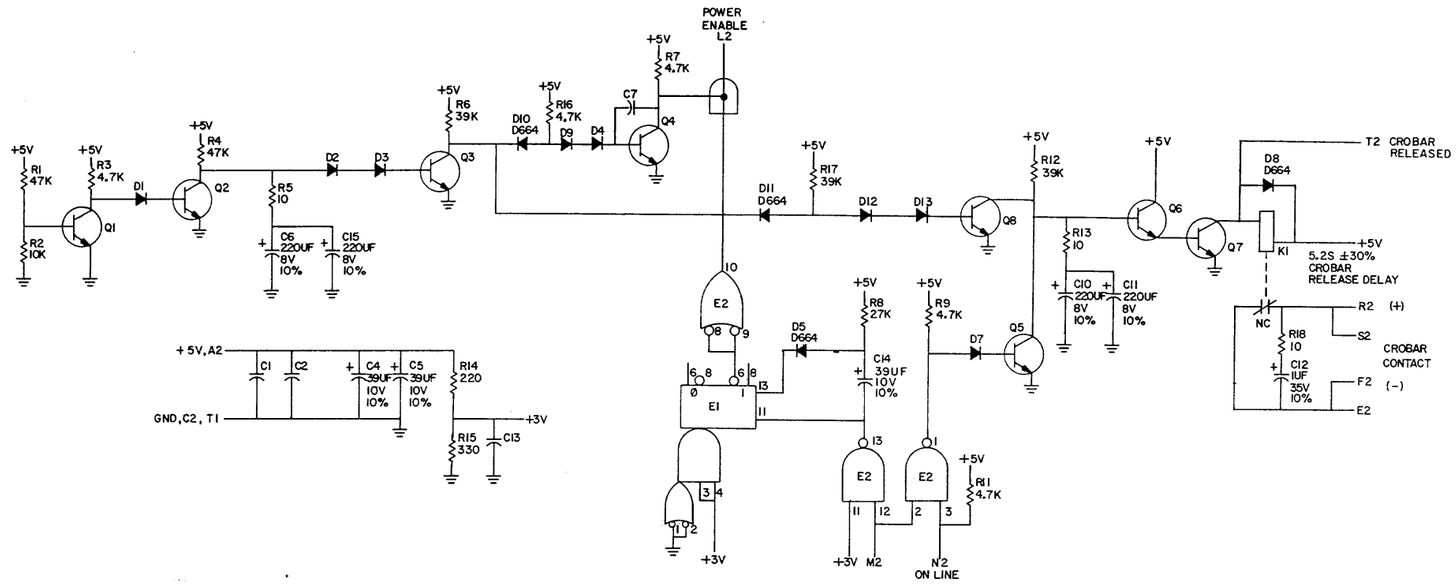

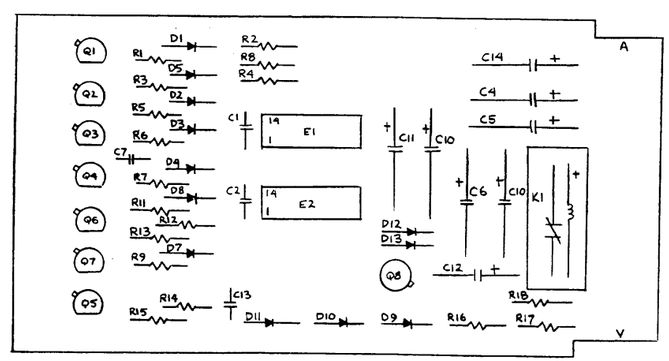

UNLESS OTHERWISE INDICATED:

DIODES = D662
RESISTORS = 1/4W, 5%
CAPACITORS = .01UF, 100V, 20%
TRANSISTORS = DEC30098
E1 = DEC9601
E2 = DEC7401
PIN 7 = GND ON E1, E2
PIN 14 = +5V

ITEM NO.	DEC PART NO.	DESCRIPTION	QTY.
		PARTS LIST	
24	9008337-03	HANDLE, FLIP CHIP - WHITE	1
23	9006732	EYELET #394-7	2
22	1909487	I.C. DEC 9601	1
21	1905590	I.C. DEC 7401	1
20	1503100	TRANSISTOR DEC 3009B	8
19	1305346	RES. 27K 1/4W 5%	1
18	1302514	RES. 39K 1/4W 5%	3
17	1302177	RES. 47K 1/4W 5%	2
16	1301317	RES. 10 1/4W 5%	3
15	1300479	RES. 10K 1/4W 5%	1
14	1300447	RES. 4.7K 1/4W 5%	5
13	1300285	RES. 330 1/4W 5%	1
12	1300271	RES. 220 1/4W 5%	1
11	1210397	RELAY	1
10	1100114	DIODE D664	4
9	1100113	DIODE D662	8
8	1005626	CAP. 220UF 8V	4
7	1001776	CAP. 1UF 35V 10% S. TANT	1
6	1001610	CAP. .01UF 100V 20% DISC	4
5	1000076	CAP. 39UF 10V 10% S. TANT	3
4	5009451	ETCHED CIRCUIT BOARD	1
3	B-MH-W519-0-6	MODULE ECO HISTORY	
2	C-AH-W519-0-5	ASSY/DRILLING HOLE LAYOUT	
1	~~K-CD-W519-0-4~~	X-Y COORDINATE HOLE LOCATION	

REVISIONS			
CHG	CHG NO.	REV.	
12	00001	D	J.D. REM

DRN Nancy Hoole 2/16/71
CHK'D 3-16-71
ENG
PROD

TRANSISTOR & DIODE CONVERSION CHART

DEC	EIA	DEC	EIA
DEC30098	2N3005	D664	1N3606
D662	1N645		

digital EQUIPMENT CORPORATION MAYNARD, MASSACHUSETTS

TITLE POWER SEQUENCE AND CROBAR

SIZE	CODE	NUMBER	REV.
D	CS	W519-0-1	D

PRINTED CIRCUIT REV. E

DEC FORM NO. 200 116