THIS SCHEMATIC IS FURNISHED ONLY FOR TEST AND MAINTENANCE PURPOSES. THE CIRCUITS ARE PROPRIETARY IN NATURE AND SHOULD BE TREATED ACCORDINGLY.
COPYRIGHT 1965 BY DIGITAL EQUIPMENT CORPORATION

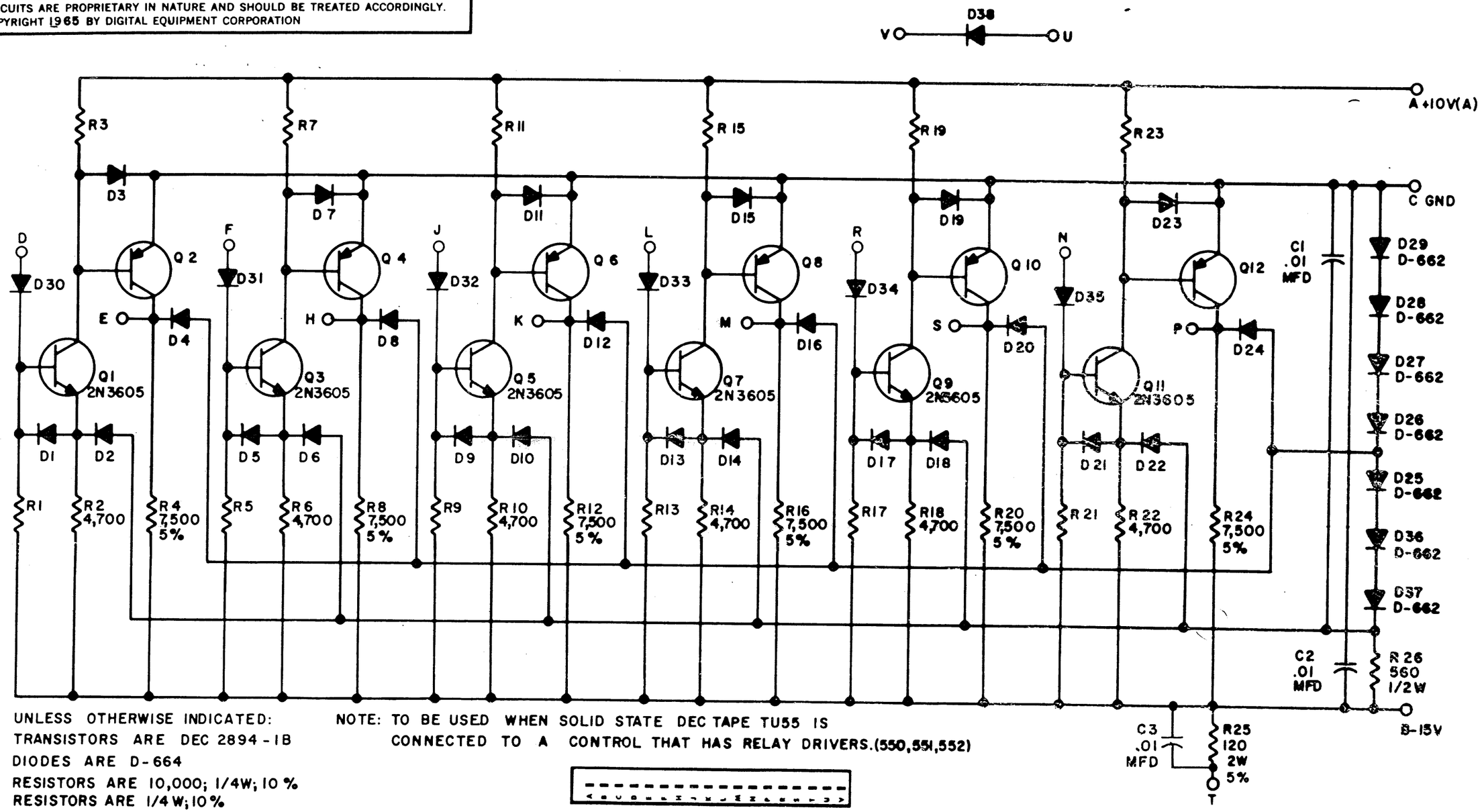


UNLESS OTHERWISE INDICATED:
TRANSISTORS ARE DEC 2894-1B
DIODES ARE D-664
RESISTORS ARE 10,000; 1/4W; 10 %
RESISTORS ARE 1/4 W; 10 %

NOTE: TO BE USED WHEN SOLID STATE DEC TAPE TU55 IS CONNECTED TO A CONTROL THAT HAS RELAY DRIVERS.(550,551,552)

| SIZE | CODE | NUMBER | REV. |
|---|---|---|---|
| B | CS | W513-0-1 | E |

| REVISIONS | | | |
|---|---|---|---|
| CHK | CHG NO. | REV. | |
| DAW | 5282 | 4 | |
| REV | & REDR. | | E |
| | 5727 | | |
| | 5741 | | |

| | | | |
|---|---|---|---|
| DRN. | I. HAHN | DATE | 5-27-65 |
| CHK'D | R. SILVERMAN | DATE | 6-4-65 |
| ENG. | D. WARDIMON | DATE | 6-5-65 |
| PROD. | | DATE | |

TRANSISTOR & DIODE CONVERSION CHART

| DEC | EIA | DEC | EIA |
|---|---|---|---|
| DEC2894-1B | NONE | | |
| 2N3605 | SAME | | |
| D662 | IN645 | | |
| D664 | IN3606 | | |

digital EQUIPMENT CORPORATION
MAYNARD, MASSACHUSETTS

TITLE
LEVEL AMPLIFIER W513

| SIZE | CODE | NUMBER | REV. |
|---|---|---|---|
| B | CS | W513-0-1 | E |

PRINTED CIRCUIT REV. F

DEC FORM NO.
DRB 102