THIS SCHEMATIC IS FURNISHED ONLY FOR TEST AND MAINTENANCE PURPOSES. THE CIRCUITS ARE PROPRIETARY IN NATURE AND SHOULD BE TREATED ACCORDINGLY.
COPYRIGHT 1964 BY DIGITAL EQUIPMENT CORPORATION

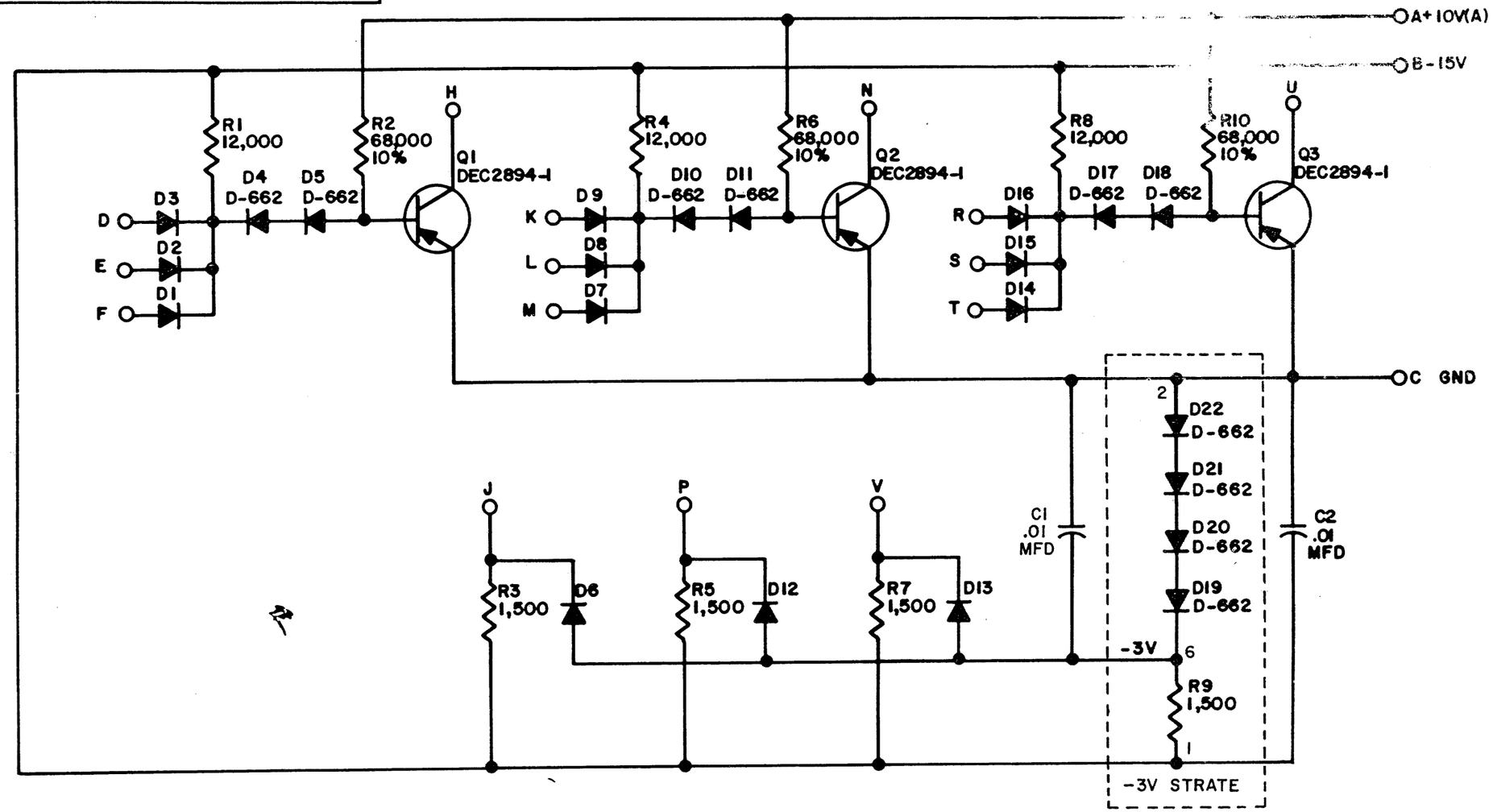

UNLESS OTHERWISE INDICATED:
RESISTORS ARE 1/4W; 5%
DIODES ARE D-664

SIZE	CODE	NUMBER	REV.
B	CS	B115-0-1	C

REVISIONS			
CHK	CHG NO.	REV.	
REV. & REDR.	5388	B	
	5673	C	

DRN.	H. PORTER	DATE	4-30-64
CHK'D	N. PERRYMAN	DATE	5-4-64
ENG.	B. SCUDNEY	DATE	5-4-64
PROD.		DATE	

TRANSISTOR & DIODE CONVERSION CHART

DEC	EIA	DEC	EIA
DEC 2894-1	NONE		
D662	IN645		
D664	IN3606		

digital EQUIPMENT CORPORATION
MAYNARD, MASSACHUSETTS

TITLE
DIODE GATE B115

SIZE	CODE	NUMBER	REV
B	CS	B115-0-1	C

PRINTED CIRCUIT REV. C

DEC FORM NO.

71