SIZE	CODE	NUMBER	REV.
B	CS	W107-0-1	B

THIS SCHEMATIC IS FURNISHED ONLY FOR TEST AND MAINTENANCE PURPOSES. THE CIRCUITS ARE PROPRIETARY IN NATURE AND SHOULD BE TREATED ACCORDINGLY.
COPYRIGHT 1967 BY DIGITAL EQUIPMENT CORPORATION

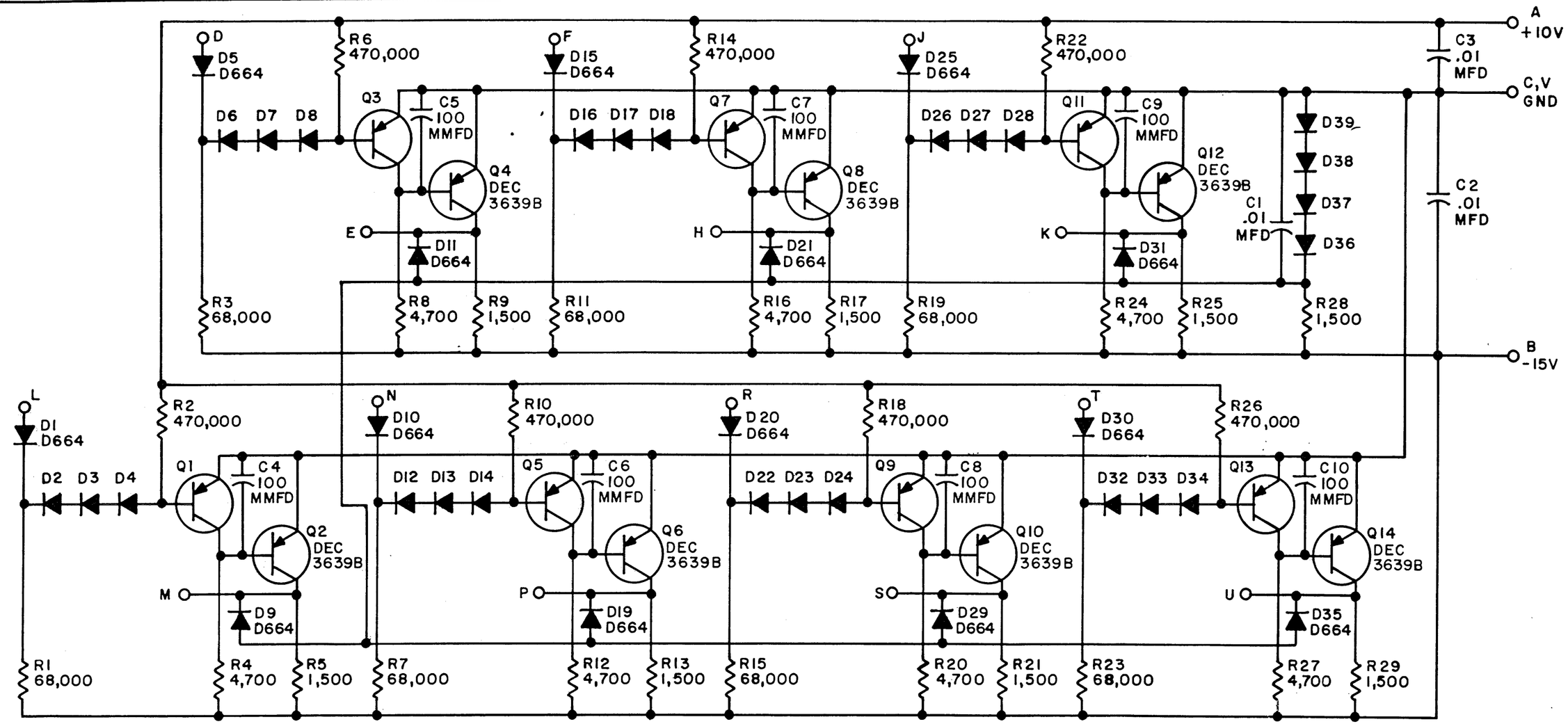

UNLESS OTHERWISE INDICATED:
RESISTORS ARE 1/4W; 5%
DIODES ARE D662
TRANSISTORS ARE DEC3639C

REVISIONS		
REV.	A	
CHG NO.	6827	
CHK		

DRN.	M. Waller	DATE	3-13-67
CHK'D	P. Silverman	DATE	3/15/67
ENG.	K. Boodsky	DATE	3/21/67
PROD.		DATE	

TRANSISTOR & DIODE CONVERSION CHART

DEC	EIA	DEC	EIA
D662	1N645		
D664	1N3606		
DEC3639B	2N3639		
DEC3639C	2N3639		

digital EQUIPMENT CORPORATION
MAYNARD, MASSACHUSETTS

TITLE I/O BUS RECEIVER W107

SIZE	CODE	NUMBER	REV.
B	CS	W107-0-1	A

PRINTED CIRCUIT REV. B

CKT.

DEC FORM NO. DRB 102

Pink

DIST. 324 434 435 359