| SIZE | CODE | NUMBER | REV. |
|---|---|---|---|
| B | CS | M902-0-1 | B |

THIS SCHEMATIC IS FURNISHED ONLY FOR TEST AND MAINTENANCE PURPOSES. THE CIRCUITS ARE PROPRIETARY IN NATURE AND SHOULD BE TREATED ACCORDINGLY. COPYRIGHT 1968 BY DIGITAL EQUIPMENT CORPORATION

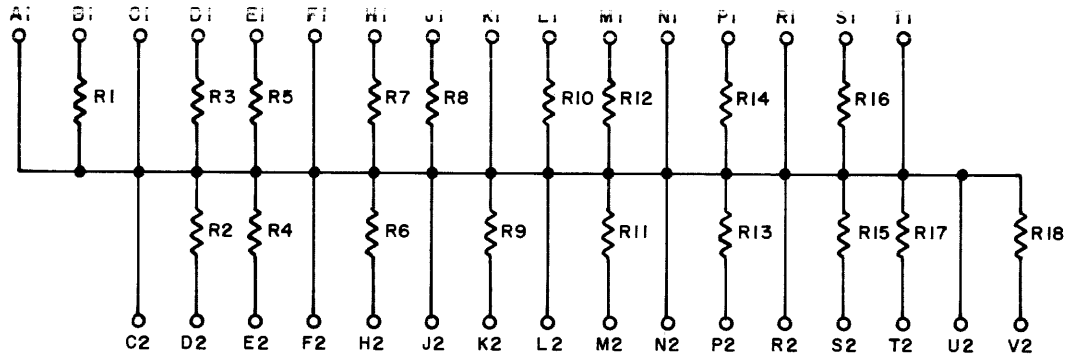


| REFERENCE DESIGNATION | DESCRIPTION | PART NO. |
|---|---|---|
| R1 – R18 | RES. 100 1/4W 5% CC | 1300229 |
| | PARTS LIST | A-PL-M902-0-0 |

PARTS LIST

| REVISIONS | | |
|---|---|---|
| CHK | CHG NO. | REV. |
| | 00001 | B |

| | | | |
|---|---|---|---|
| DRN. | M. Weller | DATE | 6-18-68 |
| CHK'D | | DATE | 6/18/68 |
| ENG. | | DATE | |
| PROD. | | DATE | |

TRANSISTOR & DIODE CONVERSION CHART

| DEC | EIA | DEC | EIA |
|---|---|---|---|
| | | | |

digital EQUIPMENT CORPORATION
MAYNARD, MASSACHUSETTS

TITLE RESISTOR TERMINATOR M902

| SIZE | CODE | NUMBER | REV. |
|---|---|---|---|
| B | CS | M902-0-1 | B |

PRINTED CIRCUIT REV. A

DEC FORM NO. DRB 102

PINK DIST. 1434/24/4351

M902-2