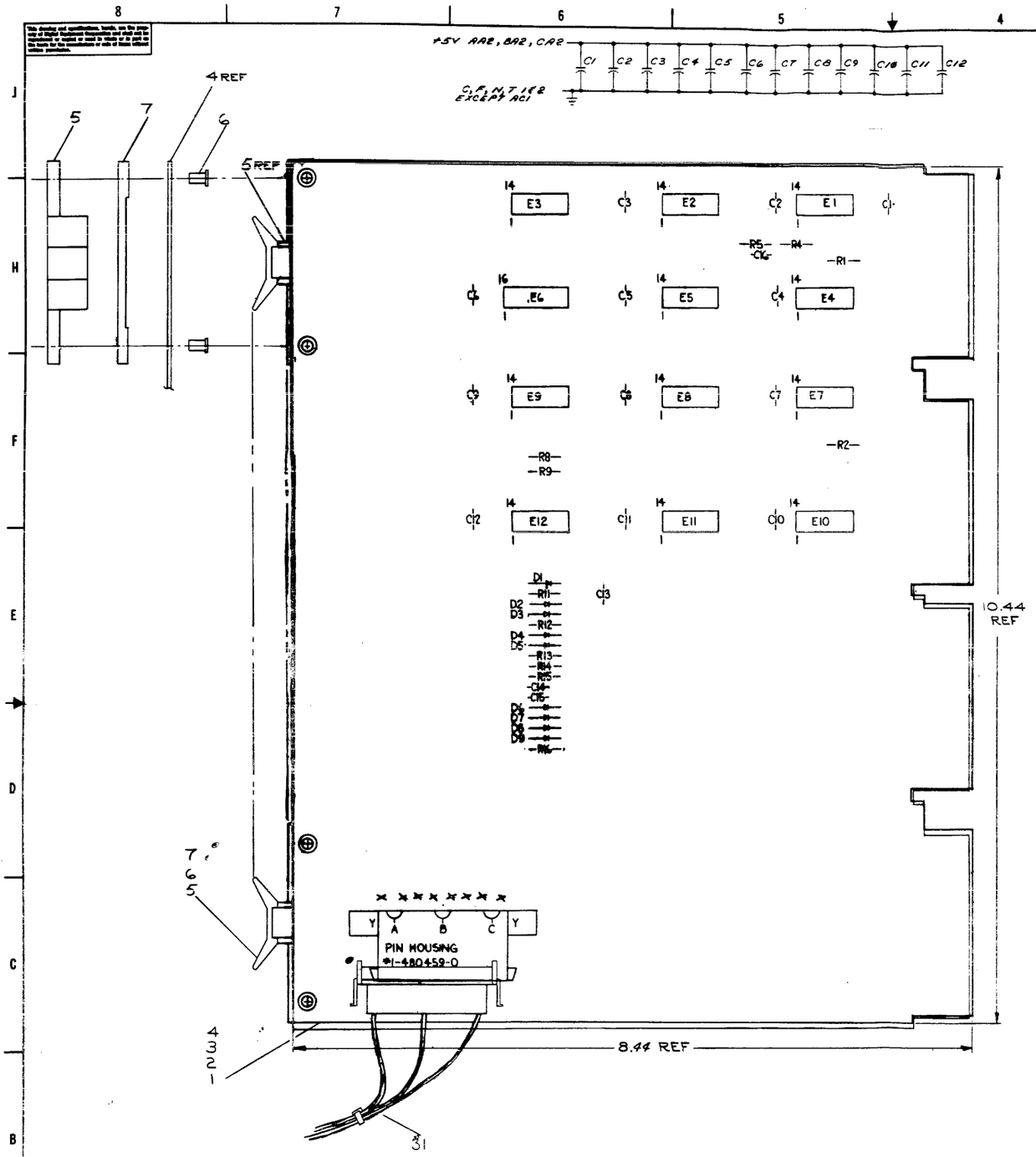

NOTES:
1. UNLESS OTHERWISE NOTED:
DIODES = D672
CAPACITORS = .01 UF 100 V 20%
IC'S = 380

QTY.	REF DESIGNATION	DESCRIPTION	PART NO.	ITEM NO.
1		POWER CABLE 28 VAC	D-IA-7007128-0-0	31
8		PIN SOCKET (MATE-N-LOCK)	1209456	30
1		PIN HOUSING (MATE-N-LOCK)	1209340-0-0	29
2		WASHER FLAT #4 NYLON	9006706	28
1	E7	I.C. DEC 8881	1909705	27
1	E4	I.C. DEC 314	1909704	26
3	E1, E10, E11	I.C. DEC 380	1909485	25
1	E6	I.C. DEC 7475	1909050	24
1	E2	I.C. DEC 7402	1909004	23
1	E5	I.C. DEC 7410	1905576	22
2	E3, E8	I.C. DEC 7400	1905575	21
1	E9	I.C. DEC 7474	1905547	20
1	E12	I.C. DEC 384	1909486	19
1	R13	RES. 2.2K 1/4W 5%	1300417	18
1	R8	RES. 7.5K 1/4W 5%	1301422	17
2	R5, R9	RES. 750 1/4W 5%	1300401	16
1	R16	RES. 10K 1/4W 5%	1300479	15
2	R12, R14	RES. 1K 1/4W 5%	1300365	14
2	R1, R2	RES. 470 1/4W 5%	1300316	13
1	R4	RES. 330 1/4W 5%	1300295	12
2	R11, R15	RES. 100 1/4W 5%	1300229	11
1	C13	CAP. .005UF	1001765	10
9	D1 - D9	DIODE D672	1105275	9
15	C1 - C12, C14 C16	CAP. .01UF 100V 20%	1001610	8
4		SPACER (CABLE CLAMP)	1202704	7
8		EYELET GS4-11 STIMPSON	9006750	6
4		HANDLE FLIP CHIP-MAGENTA	9008337-06	5
1		ETCHED CIRCUIT BOARD	5009386	4
REF		MODULE HISTORY LIST	B-MH-M882-0-0	3
REF		ASSY/DRILLING HOLE LAYOUT	D-AH-M882-0-0	2
REF		X-Y COORDINATE HOLE LOC.	K-CO-M882-0-0	1

PARTS LIST

ETCH BOARD REV D

DEC 7475	12	5		
DEC 384	1	8		
DEC 314	1	8		
DEC 380	1	8		
IC TYPE	GND	+5V		

GND AND 5V ARE USUALLY PIN 7 AND 14 RESPECTFULLY EXCEPTIONS ARE STATED ABOVE

IC PIN LOCATIONS

ITEM NO	AWG	FROM PT	TO PT

JUMPER LIST

DEC NO.	EIA NO	DEC NO.	EIA NO.
		D672	IN3653

SEMICONDUCTOR CONVERSION CHART

PRINT USED ON A-ML-DK8-EA

SCALE 2/1

SHEET 1 OF 2

digital EQUIPMENT CORPORATION

TITLE REAL TIME CLOCK (LINE)

SIZE E CODE CS NUMBER M882-0-1 REV. C

DWT. Dec 19/68

DRAWN BY DELICA

ORIGINATED M882 10/68

CHANGE NO. REVISIONS

REV. B

ECS M882-0-1

This drawing and specifications, herein, are the property of Digital Equipment Corporation and shall not be reproduced or copied or used in whole or in part as the basis for the manufacture or sale of items without written permission.

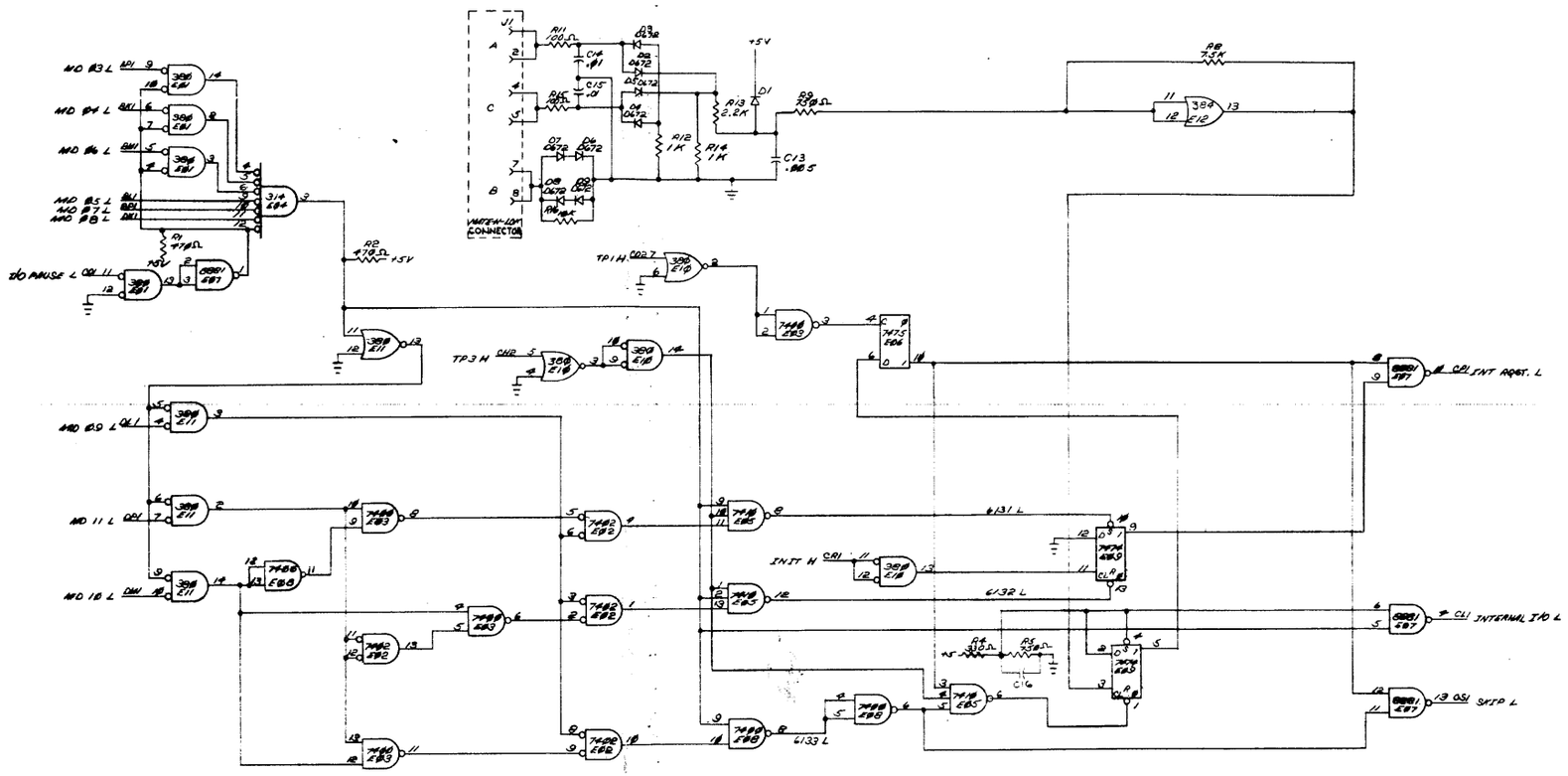

QTY	DESCRIPTION	PART NO.	ITEM NO.

PARTS LIST

UNLESS OTHERWISE SPECIFIED
DIMENSION IN INCHES
TOLERANCES
FINAL SURFACE QUALITY
REMOVE BURRS AND BREAK SHARP CORNERS

MATERIAL

FINISH

DRN. DATE 1-15-74
DES. DATE (-24-74
ENG. DATE
PROJ. ENG. DATE 1-24-74
PROD. DATE
FIRST USED ON
SCALE
POWER

digital EQUIPMENT CORPORATION
MAYNARD, MASSACHUSETTS

TITLE
REAL TIME CLOCK
(LINE)

SIZE CODE | NUMBER | REV.
B | CS | M882 – 0 – 1 | C

REVISIONS
CHANGE NO. | REV.

CS M882-0-1 C