THIS SCHEMATIC IS FURNISHED ONLY FOR TEST AND MAINTENANCE PURPOSES. THE CIRCUITS ARE PROPRIETARY IN NATURE AND SHOULD BE TREATED ACCORDINGLY.
COPYRIGHT 1969 BY DIGITAL EQUIPMENT CORPORATION

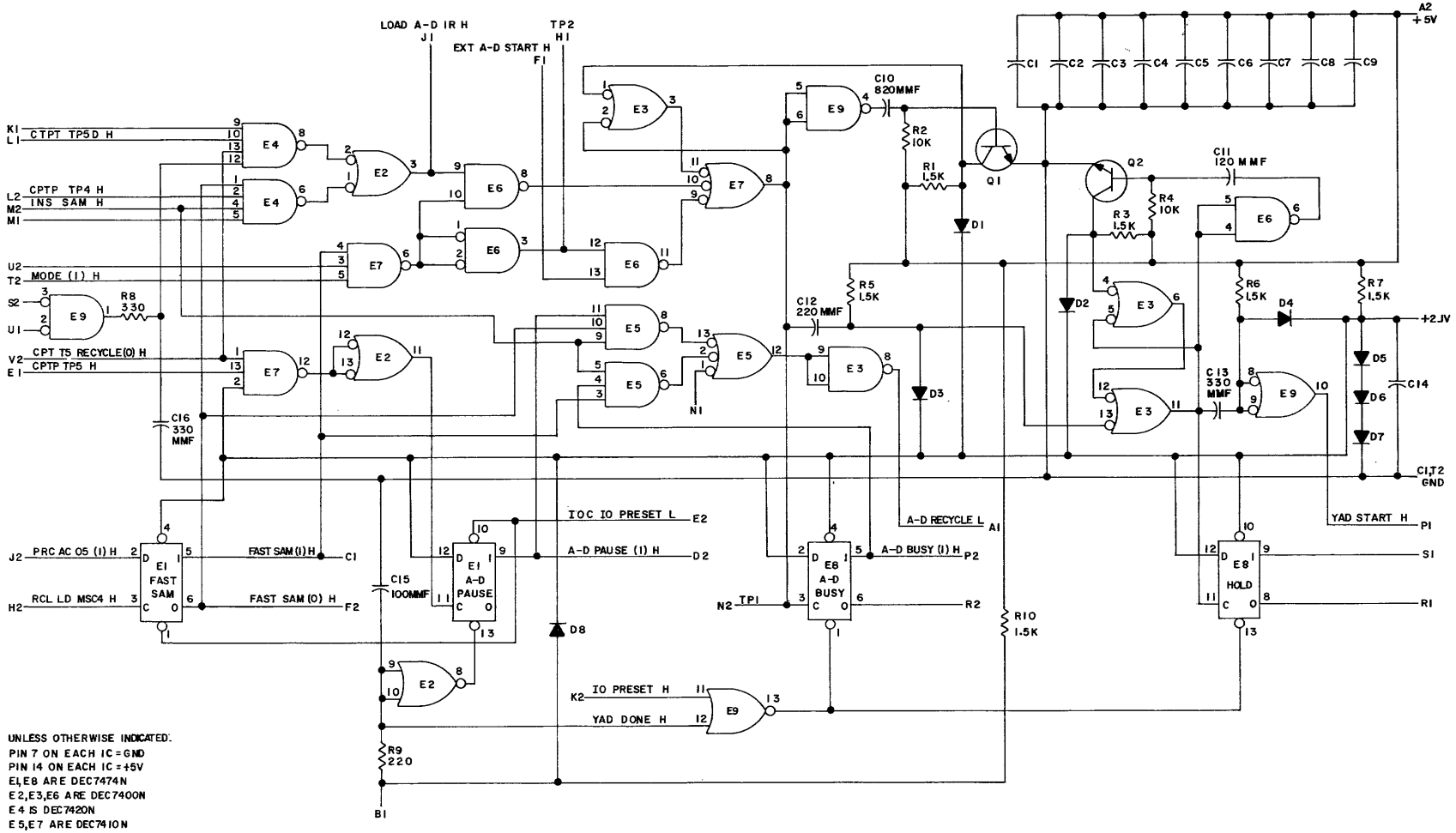

UNLESS OTHERWISE INDICATED:
PIN 7 ON EACH IC = GND
PIN 14 ON EACH IC = +5V
E1, E8 ARE DEC7474N
E2, E3, E6 ARE DEC7400N
E4 IS DEC7420N
E5, E7 ARE DEC7410N
E9 IS DEC7402N
CAPACITORS ARE .01MFD, 100V
DIODES ARE D664
RESISTORS ARE 1/4W 5%
TRANSISTORS ARE DEC3009B

TRANSISTOR & DIODE CONVERSION CHART			
DEC	EIA	DEC	EIA
D664	1N3606		
DEC3009B	2N3009B		

DRN.		DATE 5-19-69
CHK'D		DATE 2-20-69
ENG.		DATE 7-16-69
PROD.		DATE

REVISIONS
CHK | CHG NO. | REV.

digital EQUIPMENT CORPORATION
MAYNARD, MASSACHUSETTS

TITLE A-D CONTROL M760

SIZE	CODE	NUMBER	REV.
C	CS	M760-0-1	

PRINTED CIRCUIT REV. A

DEC FORM NO. DRC 102

DIST 324, 434, 435³ PINK 5/