THIS SCHEMATIC IS FURNISHED ONLY FOR TEST AND MAINTENANCE PURPOSES. THE CIRCUITS ARE PROPRIETARY IN NATURE AND SHOULD BE TREATED ACCORDINGLY.
COPYRIGHT 1970 BY DIGITAL EQUIPMENT CORPORATION

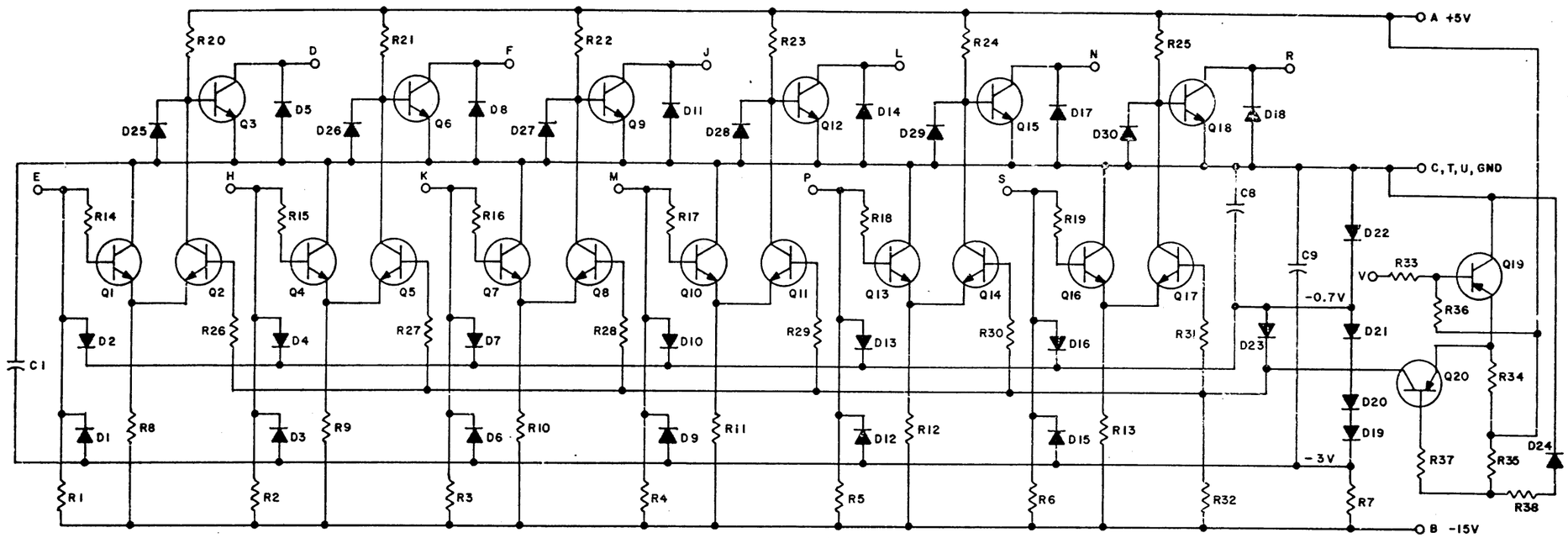

R34	RES. 100 1/4W 5% CC	1300229
R36	RES. 10K 1/4W 10% CC	1300481
R38	RES. 220 1/4W 10% CC	1300275
Q19 Q20	TRANSISTOR DEC2894-1B	1503097
Q1-Q18	TRANSISTOR DEC30098-S	1503100
R20-R25, R35, R37	RES. 1K 1/4W 5% CC	1300365
R8-R13	RES. 2.2K 1/4W 5% CC	1300417
R14-R19, R26-R31, R33	RES. 470 1/4W 5% CC	1300316
R1-R7, R32	RES. 1.5K 1/4W 5% CC	1300391
C1, C8, C9	CAP. .01 MFD 100V 20% DISC	1001610
D19-D22, D24	DIODE D662	1100113
D1-D18, D23, D25-D30	DIODE D664	1100114
	PARTS LIST	A-PL-M517-0-0
REFERENCE DESIGNATION	DESCRIPTION	PART NO.

PARTS LIST

TRANSISTOR & DIODE CONVERSION CHART			
DEC	EIA	DEC	EIA
DEC30096	2N3009		
D662	1N645		
D664	1N3606		
DEC2894-1B	NONE		

DRN J. Campos	DATE 5/7/70	
CHK'D	DATE 5/7/70	
ENG	DATE 6/1/70	
CONTROL	DATE	

REVISIONS: CHK. | CHG. NO. | REV. — | A-M-00001 | A

TITLE: BUS CONVERTER M517

DIGITAL EQUIPMENT CORPORATION, MAYNARD, MASSACHUSETTS

SIZE C | CODE CS | NUMBER M517-0-1 | REV. A

PRINTED CIRCUIT REV A

DEC FORM NO.