THIS SCHEMATIC IS FURNISHED ONLY FOR TEST AND MAINTENANCE PURPOSES. THE CIRCUITS ARE PROPRIETARY IN NATURE AND SHOULD BE TREATED ACCORDINGLY
COPYRIGHT 1970 BY DIGITAL EQUIPMENT CORPORATION

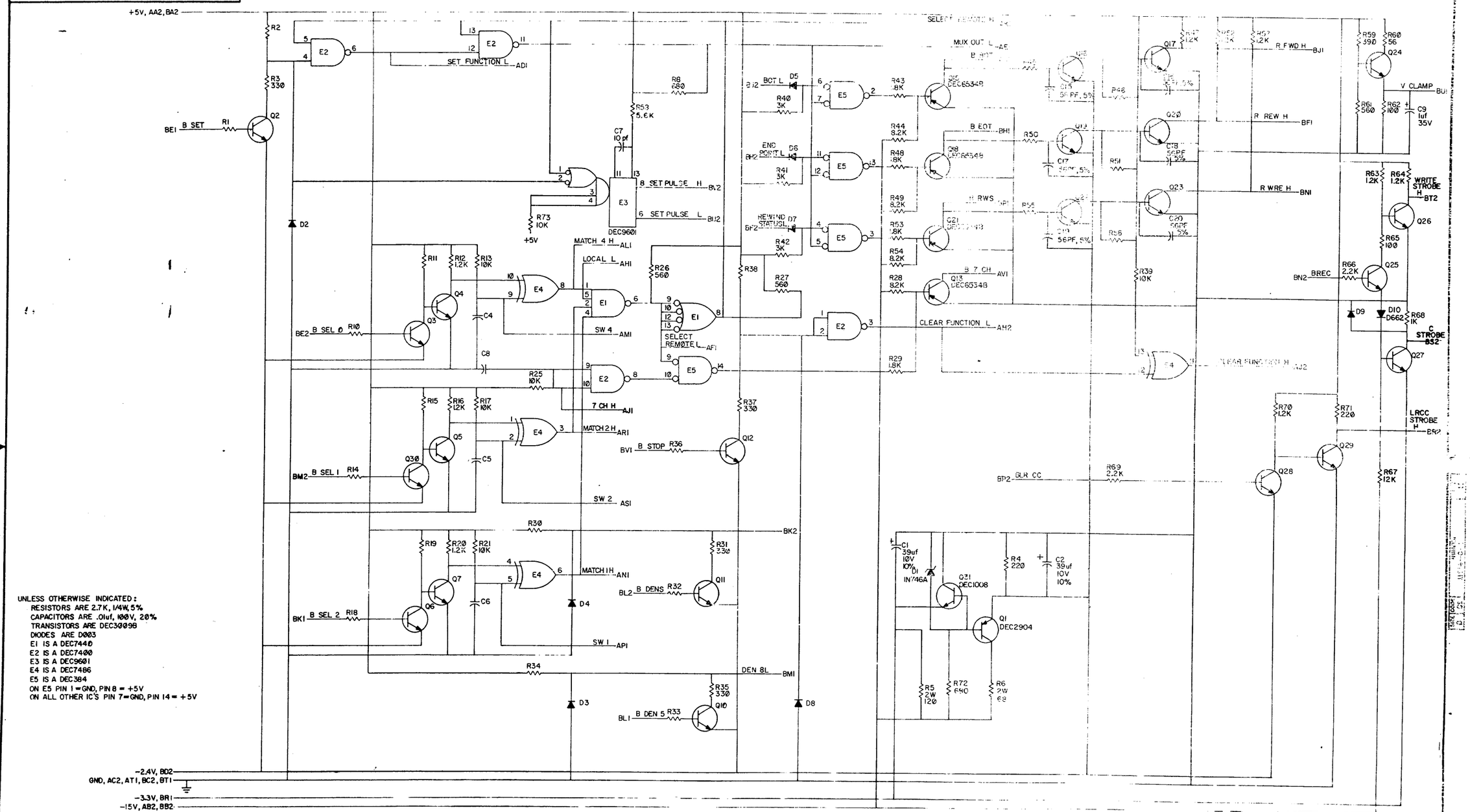

UNLESS OTHERWISE INDICATED:
RESISTORS ARE 2.7K, 1/4W, 5%
CAPACITORS ARE .01uf, 100V, 20%
TRANSISTORS ARE DEC300398
DIODES ARE D003
E1 IS A DEC7400
E2 IS A DEC7400
E3 IS A DEC9601
E4 IS A DEC7486
E5 IS A DEC384
ON E5 PIN 1 = GND, PIN 8 = +5V
ON ALL OTHER IC'S PIN 7 = GND, PIN 14 = +5V

REVISIONS		
CHG	CHG NO.	REV.
	00001	F
	00002	H
	00003	J
	00004	K

DRN jeanne french DATE 8/11/70
CHK'D DATE 12-29-70
ENG DATE
PROD DATE

TRANSISTOR & DIODE CONVERSION CHART

DEC	EIA	DEC	EIA
DEC2904	2N1132		
DEC6534B	MPS6534		
DEC300398	2N3009		
D003	1N994		
IN746A	SAME		

digital EQUIPMENT CORPORATION MAYNARD, MASSACHUSETTS

TITLE BUS TRANSCIEVER M514

SIZE	CODE	NUMBER	REV
D	CS	M514-0-1	K

PRINTED CIRCUIT REV

DEC FORM NO. DRB 118