THIS SCHEMATIC IS FURNISHED ONLY FOR TEST AND MAINTENANCE PURPOSES. THE CIRCUITS ARE PROPRIETARY IN NATURE AND SHOULD BE TREATED ACCORDINGLY
COPYRIGHT 1969 BY DIGITAL EQUIPMENT CORPORATION

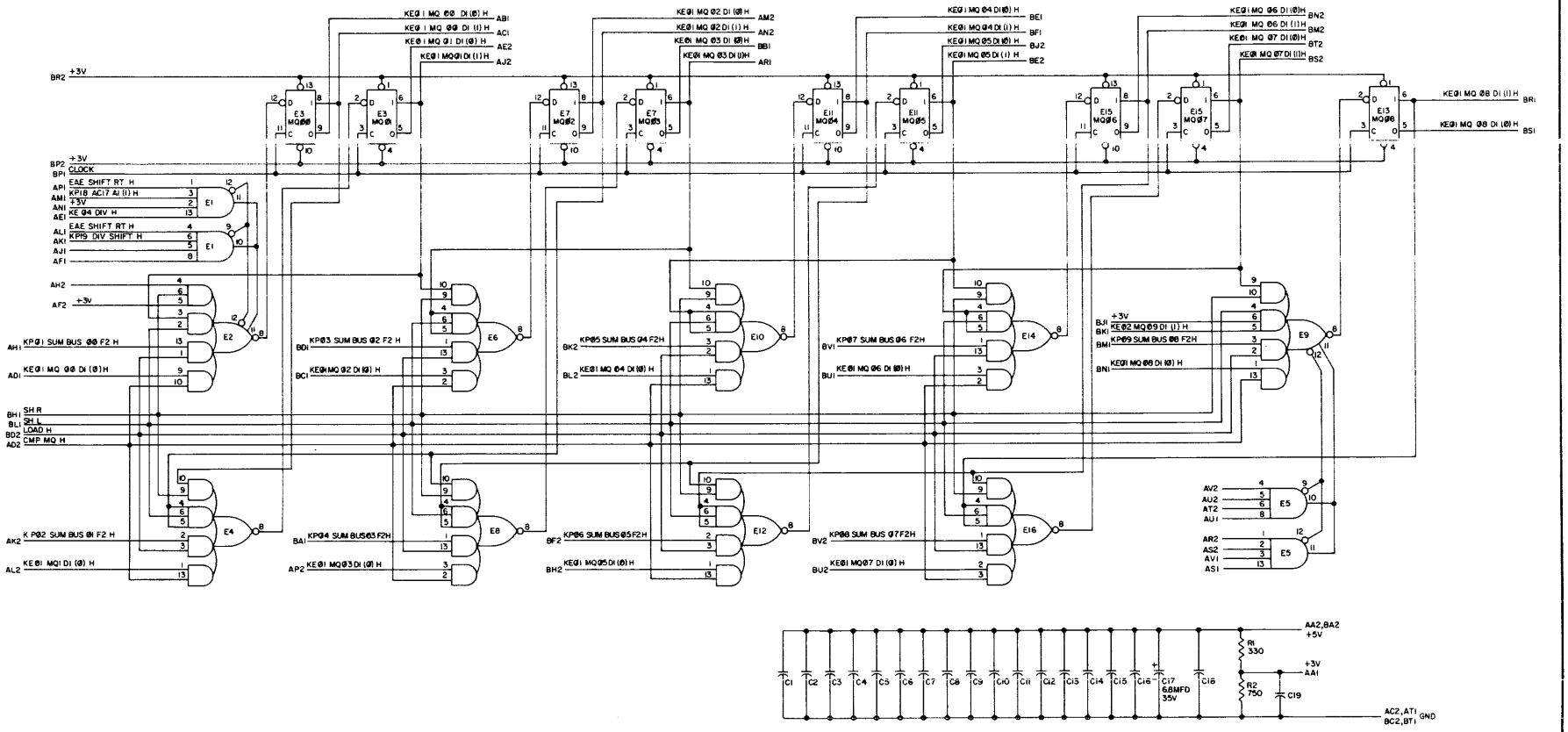

UNLESS OTHERWISE INDICATED:
CAPACITORS ARE .01 MFD, 100V, 20%
RESISTORS ARE 1/4W, 5%
PIN 7 ON EACH IC = GND
PIN 14 ON EACH IC = +5V
E2, E4, E6, E8, E9, E10, E12, E14, E16 ARE DEC74H53N
E3, E7, E11, E13, E15 ARE DEC7474N
E1, E5 ARE DEC74H60N

REVISIONS			
CHG. NO.	REV.		

DRAWN: BUTLER 12/1/69
CHECKED: 12/1/69
ENGR: 12/1/69
PROD: DATE

TRANSISTOR & DIODE CONVERSION CHART

DEC	EIA	DEC	EIA

digital EQUIPMENT CORPORATION MAYNARD, MASSACHUSETTS

TITLE: MO REGISTER M218

SIZE	CODE	NUMBER	REV
D	CS	M218-0-1	

PRINTED CIRCUIT REV A