SIZE	CODE	NUMBER	REV.
B	CS	M191-0-1	C

THIS SCHEMATIC IS FURNISHED ONLY FOR TEST AND MAINTENANCE PURPOSES. THE CIRCUITS ARE PROPRIETARY IN NATURE AND SHOULD BE TREATED ACCORDINGLY.
COPYRIGHT 1970 BY DIGITAL EQUIPMENT CORPORATION

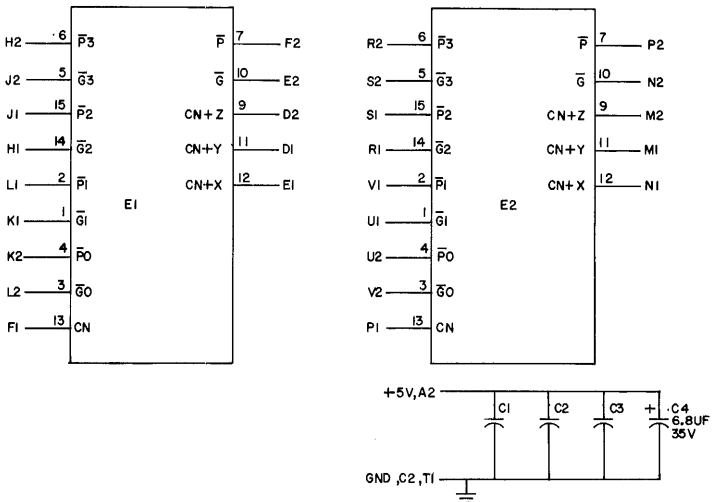

UNLESS OTHERWISE INDICATED:
E1, E2 ARE DEC74182
PIN 8 = GND ON E1, E2
PIN 16 = +5V
CAPACITORS ARE .01UF, 100V, 20%

REVISIONS		
CHK	CHG NO.	REV.
	00001	C

DRN.	NANCY MOORE	DATE	8/21/70
CHK'D	Anderson	DATE	10CT70
ENG.		DATE	10/23/70
PROD.		DATE	

TRANSISTOR & DIODE CONVERSION CHART

DEC	EIA	DEC	EIA

digital EQUIPMENT CORPORATION
MAYNARD, MASSACHUSETTS

TITLE LOOK-AHEAD LOGIC FOR 74181 M191

SIZE	CODE	NUMBER	REV.
B	CS	M191-0-1	C

PRINTED CIRCUIT REV. C D

DEC FORM NO.
DRB 102

115 / 91

DIST. 324,434,435 4 PINK