THIS SCHEMATIC IS FURNISHED ONLY FOR TEST AND MAINTENANCE PURPOSES. THE CIRCUITS ARE PROPRIETARY IN NATURE AND SHOULD BE TREATED ACCORDINGLY.
COPYRIGHT 1968 BY DIGITAL EQUIPMENT CORPORATION

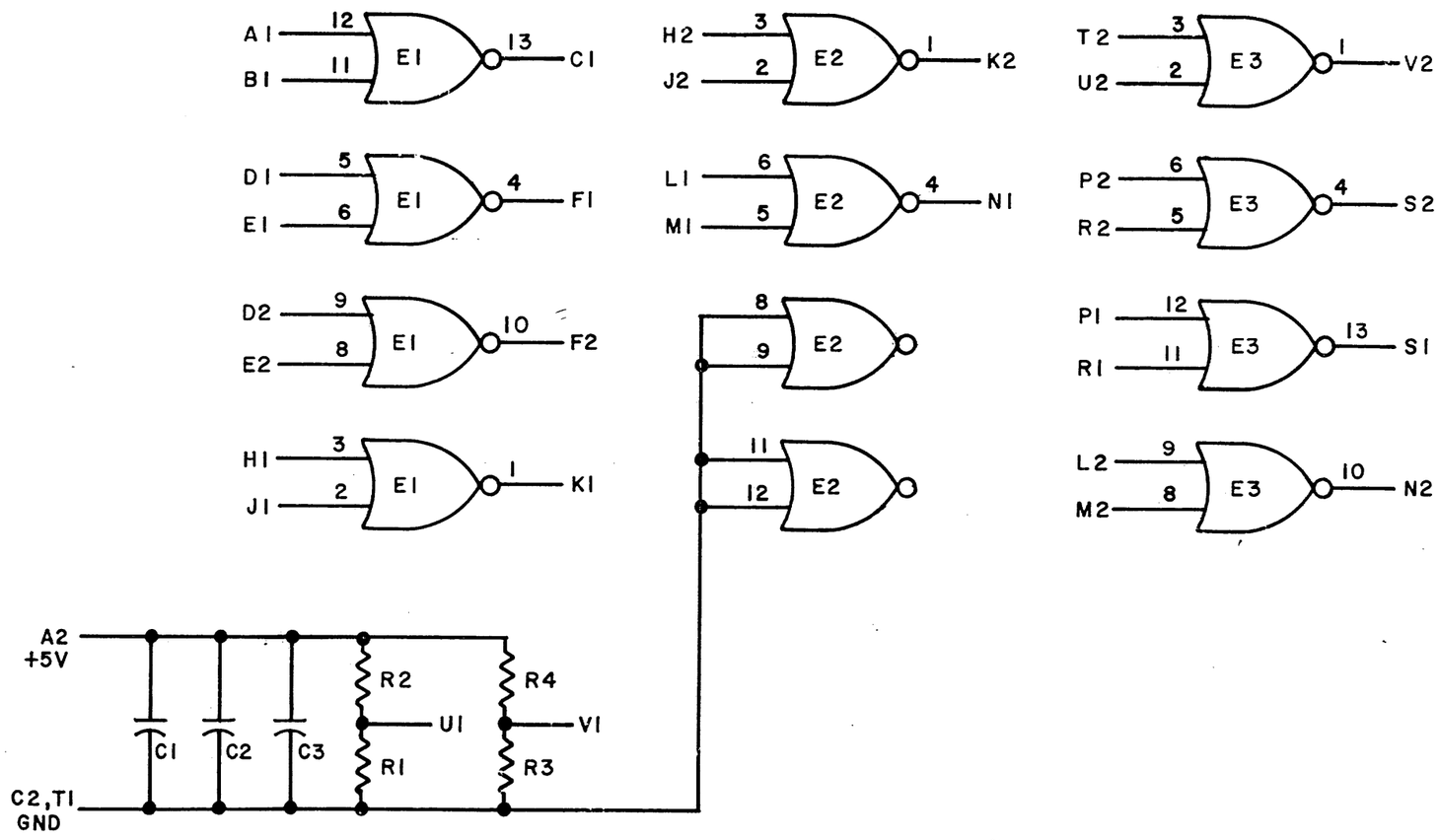

NOTES:
PIN 7 ON EACH IC = GND
PIN 14 ON EACH IC = +5V

REFERENCE DESIGNATION	DESCRIPTION	PART NO.
C1,C2,C3	CAP. .01MFD 100V 20% DISC	1001610
E1,E2,E3	INTEGRATED CKT. DEC7402N	1909004
R2,R4	RES. 330 1/4W 5% CC	1300295
R1,R3	RES. 750 1/4W 5% CC	1301401
	PARTS LIST	A-PL-M112-0-0

PARTS LIST

REVISIONS			
CHK	CHG NO.	REV.	
MM	00001	A	
	00002	C	
	00003	D	

DRN. M. Waller	DATE 2-20-68	
CHK'D	DATE 2/20/68	
ENG.	DATE 3/7/68	
PROD.	DATE	

TRANSISTOR & DIODE CONVERSION CHART

DEC	EIA	DEC	EIA

digital EQUIPMENT CORPORATION
MAYNARD, MASSACHUSETTS

TITLE
NOR GATE M112

SIZE	CODE	NUMBER	REV.
B	CS	M112-0-1	D

PRINTED CIRCUIT REV. D

DIST. 324 434 435 (5) PINK

DEC FORM NO.
DRB 102

SIZE	CODE	NUMBER	REV.
B	CS	M112-0-1	D

25