"THIS DRAWING AND SPECIFICATIONS, HEREIN, ARE THE PROPERTY OF DIGITAL EQUIPMENT CORPORATION AND SHALL NOT BE REPRODUCED OR COPIED OR USED IN WHOLE OR IN PART AS THE BASIS FOR THE MANUFACTURE OR SALE OF ITEMS WITHOUT WRITTEN PERMISSION.
COPYRIGHT © 1975 DIGITAL EQUIPMENT CORPORATION"

NOTES:

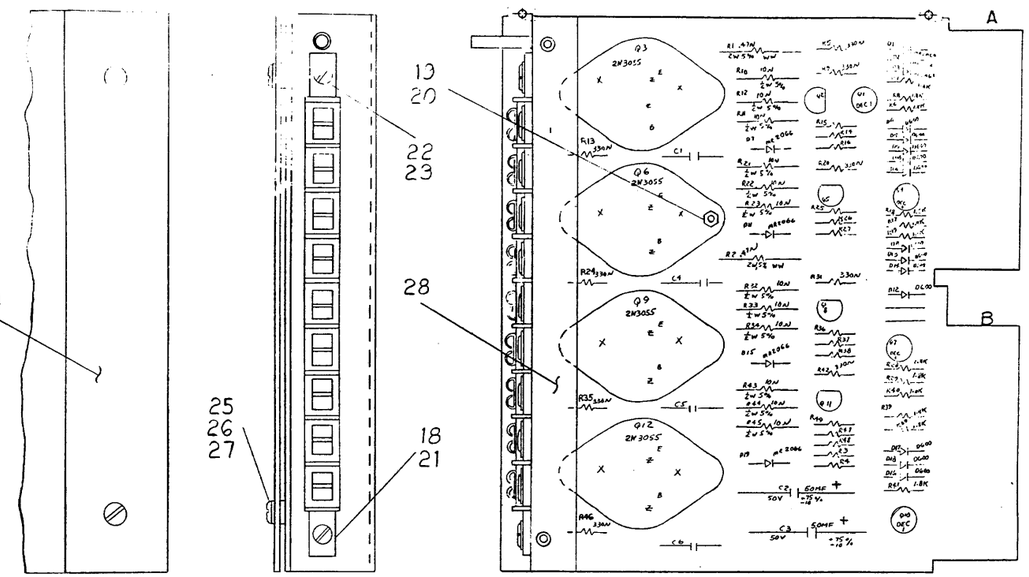

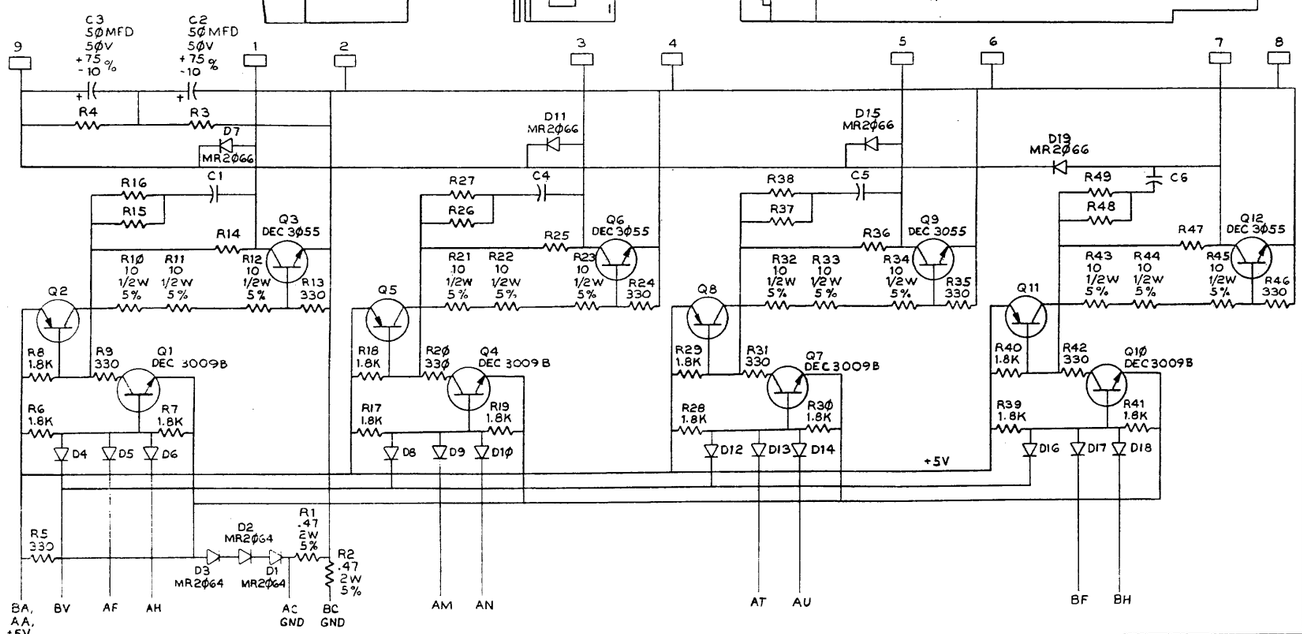

UNLESS OTHERWISE INDICATED:
RESISTORS ARE 33K, 1/4 W, 10% CAPACITORS ARE 680MMF, 500V, 10%
DIODES ARE D600 TRANSISTORS ARE DEC 6534D ▭ INDICATES TERMINALS

REF				
REF		X-Y COORDINATE HOLE LOCATION	K-CO-K652-0-4	1
REF		ASSY/DRILLING HOLE LAYOUT	D-AH-K652-0-2	2
REF		MODULE ECO HISTORY	E-MH-K652-0-6	3
1		ETCHED CIRCUIT BOARD	5009027	4
4	C1, C4-C6	CAP. 680MMF, 500V, 10% CERAMIC	1005726	5
2	C2, C3	CAP. 50MFD, 50V, -10+75% S. TANT	1000080	6
3	D1-D3	DIODE MR 2064	1103183	7
12	D4-D6, D8-D10, D12-D14, D16-D18	DIODE D600	1105366	8
4	D7, D11, D15, D19	DIODE IN4004	1105796	9
2	R1, R2	RES. .47 OHMS, 2W, 5%, WW	1305258	10
14	R3, R4, R14-R16, R25-R27, R36-R38, R47-R49	RES. 33K, 1/4W, 10%, C.C.	1300510	11
9	R5, R9, R13, R20, R24, R31, R35, R42, R46	RES. 330 OHMS, 1/4W, 10%, CC.	1300293	12
12	R6-R8, R17-R19, R28-R30, R39-R41	RES. 1.8K, 1/4W, 10%, CC.	1301428	13
12	R10-R12, R21-R23, R32-R34, R43-R45	RES. 10 OHMS, 1/2W, 5%, CC.	1300168	14
4	Q1, Q4, Q7, Q10	TRANSISTOR DEC3009B	1503100	15
4	Q2, Q5, Q8, Q11	TRANSISTOR DEC 6534D	1503409	16
4	Q3, Q6, Q9, Q12	TRANSISTOR 2N 3055	1505819	17
1		STRIP TERMINAL	1209083	18
8		SCR BND HD 4-40X5/16 LG	9006010-04	19
8		NUT KEP 4-40	9006557	20
1		BLOCK TERMINAL	B-MD-5508817-0-0	21
2		WASHER LOCK INTERNAL TOOTH #6	9006633	22
2		SCR, BND HD 6-32X9/16 LG	9007793-04	23
1		PLATE INSULATOR	B-MD-5508235-0-6	24
2		SCR BND HD MACH #6-32X.25LG	9006020-04	25
2		WASHER FLAT FIBER	9008079	26
2		NUT PERMA #6-32X 3/64 TUB.	9006580	27
1		BRKT, MTG	C-TA-748241-0-0	28

QTY | REF. DESIGNATION | DESCRIPTION | PART NO. | ITEM NO.

PARTS LIST

IC TYPE	GND	+5V

GND AND 5V ARE USUALLY PIN 7 AND 14 RESPECTIVELY EXCEPTIONS ARE STATED ABOVE

IC PIN LOCATIONS

FIRST USED ON OPTION MODEL: K652

ETCH BOARD REV. B

REV.	CHANGE NO.	CHK
B	K652-00001	I

REVISED & REDRAWN — REVISIONS

DEC NO.	EIA NO.	DEC NO.	EIA NO.

SEMICONDUCTOR CONVERSION CHART

DRN. Q. [illegible] DATE 5-1-75
CHK'D. E. Renouard DATE 5-16-75
ENG. P.R.G. Mann DATE 5-20-75
PROJ. ENG. DATE
PROD. DATE
NEXT HIGHER ASSY —
SCALE —
SHEET 1 OF 1

digital

TITLE: DC DRIVER

SIZE D | CODE CS | NUMBER K652-0-1 | REV. B

DIST.

DEC FORM NO. DNO 139.0

221