THIS SCHEMATIC IS FURNISHED ONLY FOR TEST AND MAINTENANCE PURPOSES. THE CIRCUITS ARE PROPRIETARY IN NATURE AND SHOULD BE TREATED ACCORDINGLY
COPYRIGHT 1970 BY DIGITAL EQUIPMENT CORPORATION

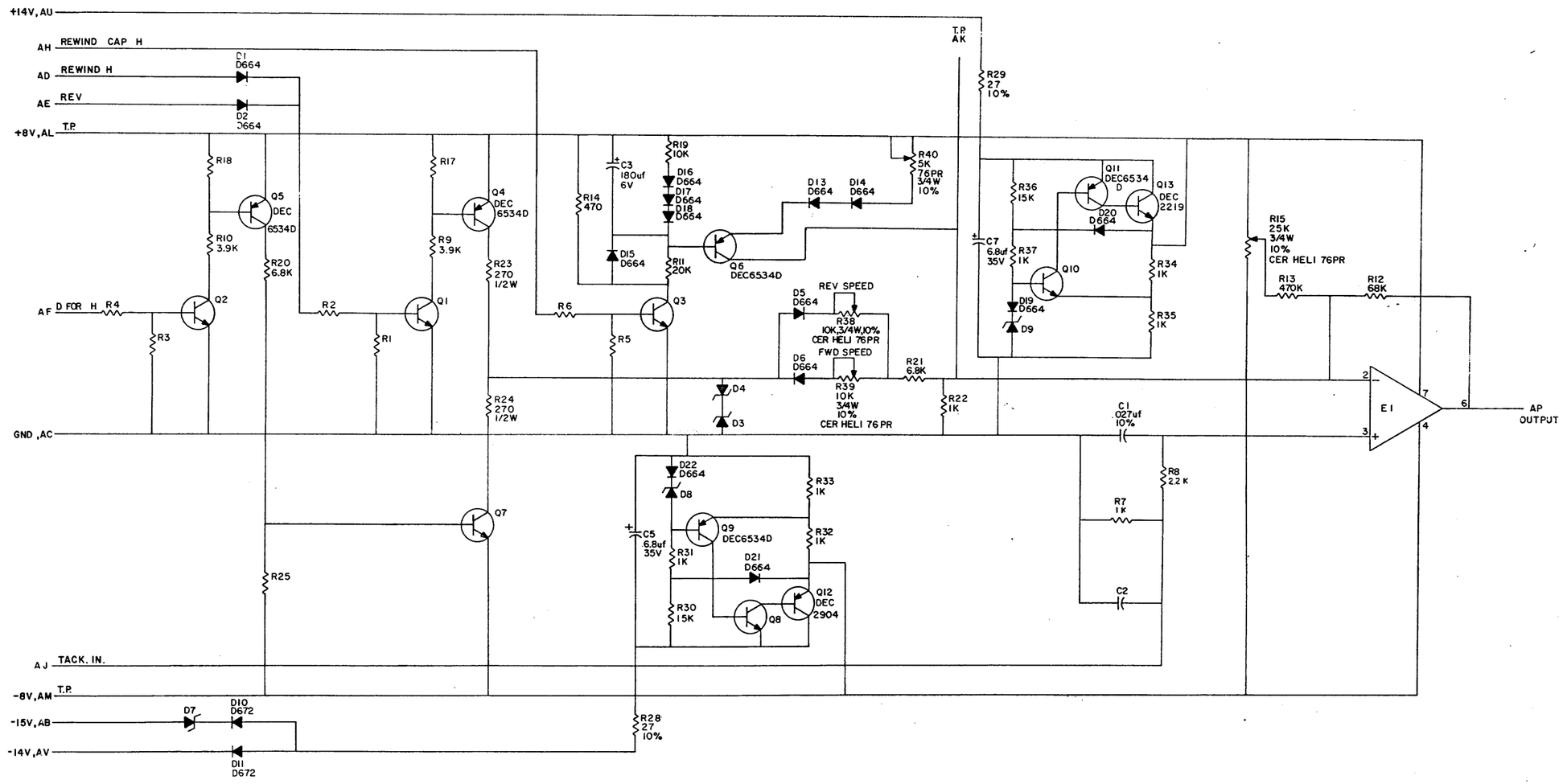

UNLESS OTHERWISE INDICATED:
RESISTORS ARE 1.5K,1/4W,5%
CAPACITORS ARE .01uf,100V,20%
DIODES ARE IN750A
TRANSISTORS ARE DEC6531
E1 IS DEC307

REVISIONS		
CHK	CHG NO.	REV.
	00001	E
	000002	F
	000024	H
	000034	J

INCORPORATED
HARRY OKAS

DRN S. COOPER DATE 8-20-70
CHK'D DATE 10-15-70
ENG. DATE 10/21/71
PROD DATE

TRANSISTOR & DIODE CONVERSION CHART

DEC	EIA	DEC	EIA
DEC6531	MPS6531	IN750A	SAME
DEC2219	2N2219	D664	IN3606
DEC6534D	MPS6534	D672	IN3653

digital EQUIPMENT CORPORATION MAYNARD, MASSACHUSETTS

TITLE TU-10 CAPSTAN SERVO PREAMPLIFIER G932

SIZE D | CODE CS | NUMBER 6932-0-1 | REV J

PRINTED CIRCUIT REV. D

SIZE D | CODE CS | NUMBER G932A-0-1 | REV J

DEC FORM NO. 888 116

DIST. 324, 425, 475

PINK