THIS SCHEMATIC IS FURNISHED ONLY FOR TEST AND MAINTENANCE PURPOSES. THE CIRCUITS ARE PROPRIETARY IN NATURE AND SHOULD BE TREATED ACCORDINGLY.
COPYRIGHT 1969 BY DIGITAL EQUIPMENT CORPORATION

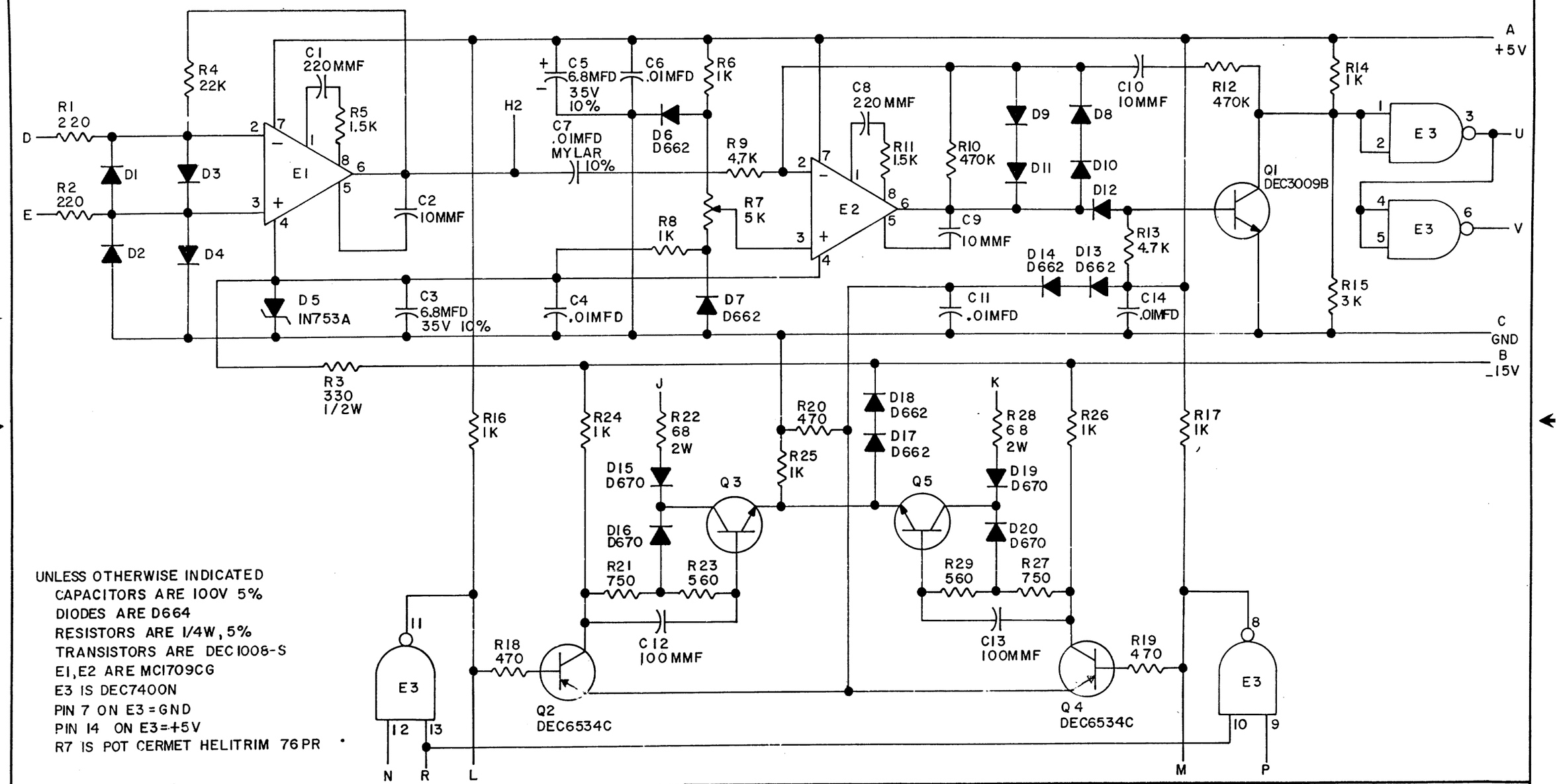

UNLESS OTHERWISE INDICATED
CAPACITORS ARE 100V 5%
DIODES ARE D664
RESISTORS ARE 1/4W, 5%
TRANSISTORS ARE DEC1008-S
E1, E2 ARE MC1709CG
E3 IS DEC7400N
PIN 7 ON E3 = GND
PIN 14 ON E3 = +5V
R7 IS POT CERMET HELITRIM 76PR

REVISIONS			
CHK	CHG NO.	REV.	
		A	
	202	B	H. DRAB 8/16/72
			H. DRAB

DRN.	G. Clemmer	DATE 8-29-69
CHK'D		DATE 9/3/69
ENG.		DATE 9/25/69
PROD.		DATE

TRANSISTOR & DIODE CONVERSION CHART

DEC	EIA	DEC	EIA
D664	IN3606	DEC1008-S	MM1008
D662	IN645		
D670	SAME		
DEC3009B	2N3009B		
DEC6534C	MPS6534		

digital EQUIPMENT CORPORATION
MAYNARD, MASSACHUSETTS

TITLE MANCHESTER READER/WRITER G888

SIZE	CODE	NUMBER	REV.
B	CS	G888-0-1	E

PRINTED CIRCUIT REV. A

DEC FORM NO. DRB 102

SIZE B | CODE CS | NUMBER G888-0-1 | REV. E