THIS SCHEMATIC IS FURNISHED ONLY FOR TEST AND MAINTENANCE PURPOSES. THE CIRCUITS ARE PROPRIETARY IN NATURE AND SHOULD BE TREATED ACCORDINGLY.
COPYRIGHT 1967 BY DIGITAL EQUIPMENT CORPORATION

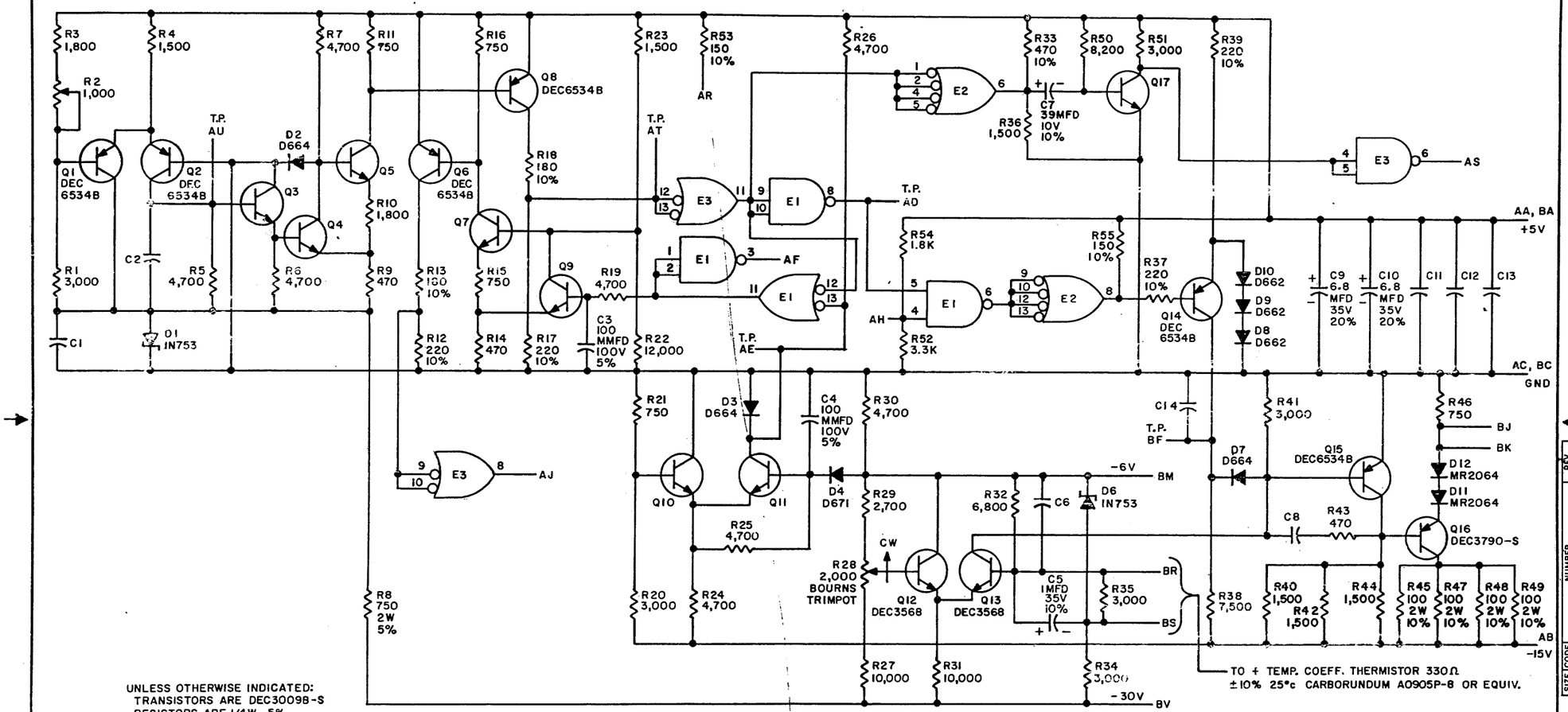

UNLESS OTHERWISE INDICATED:
TRANSISTORS ARE DEC3009B-S
RESISTORS ARE 1/4W, 5%
CAPACITORS ARE .01 MFD
E1 & E3 ARE DEC7400N
E2 IS DEC7440N
PIN 7 ON EACH IC = GND
PIN 14 ON EACH IC = +5V

PARTS LIST A-PL-G826-0-0

REVISIONS			
CHK	CHG NO.	REV.	
	6923	E	
	00002	F	
	00003		
	00004		
	00005	H	
	00006	J	
	00007	L	

DRN. M. Waller DATE 5-10-67
CHK'D. DATE 5/26/67
ENG. DATE 1/26/68
PROD. DATE

TRANSISTOR & DIODE CONVERSION CHART

DEC	EIA	DEC	EIA
DEC3009B	2N3009	D664	IN3606
DEC3568	2N3568	D671	IN3693
DEC6534B	MP86534		
DEC3790	2N3790	IN753	SAME
D662	IN645	MR2064	IN4001

digital EQUIPMENT CORPORATION
MAYNARD, MASSACHUSETTS

TITLE REGULATOR CONTROL G826

SIZE	CODE	NUMBER	REV.
C	CS	G826-0-1	L

PRINTED CIRCUIT REV. K

DEC FORM NO. DEC 102

DIST. 324/93/9331