THIS SCHEMATIC IS FURNISHED ONLY FOR TEST AND MAINTENANCE PURPOSES. THE CIRCUITS ARE PROPRIETARY IN NATURE AND SHOULD BE TREATED ACCORDINGLY
COPYRIGHT 1970 BY DIGITAL EQUIPMENT CORPORATION

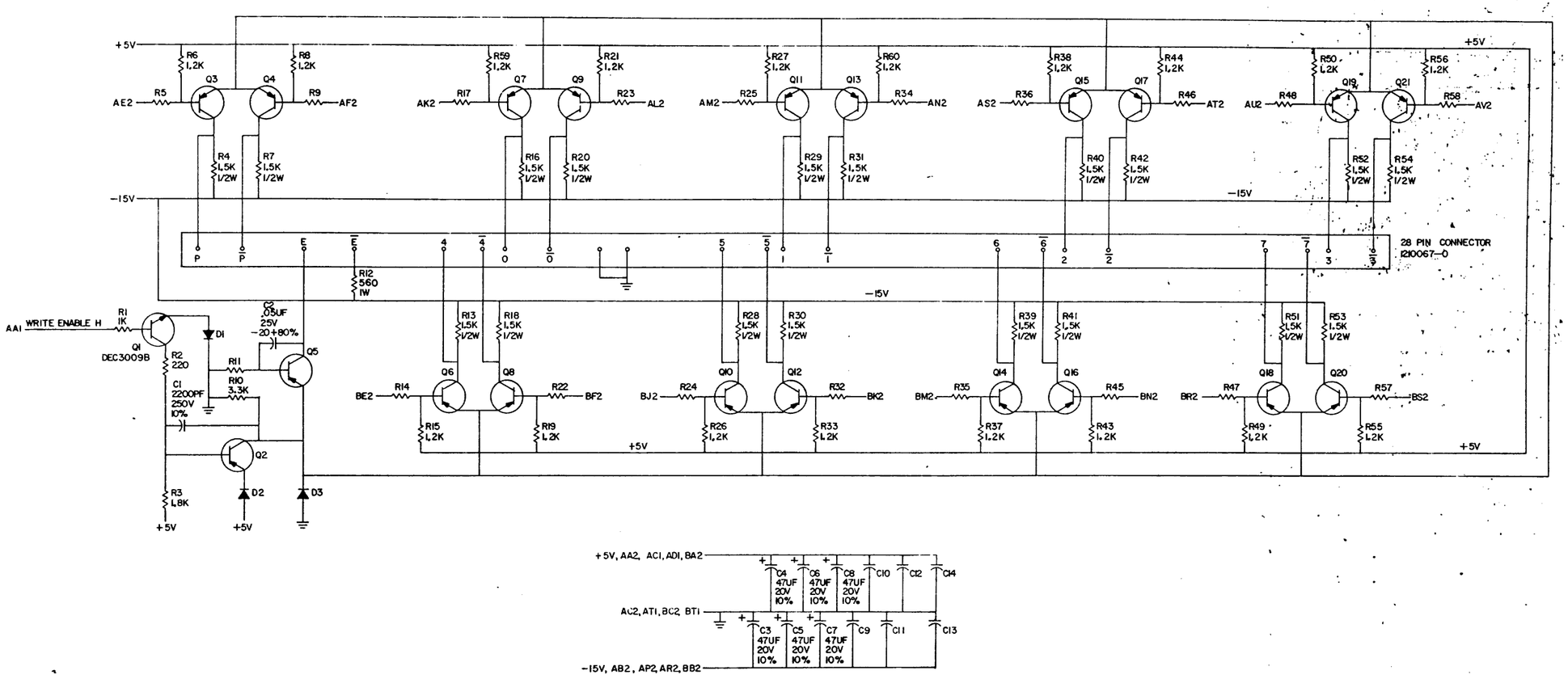

UNLESS OTHERWISE INDICATED:

RESISTORS = 680, 1/4W, 5%
CAPACITORS = .01UF, 100V, 20%
TRANSISTORS = 2N2904A
DIODES = D672

REVISIONS		
CHG	CHG NO.	REV
	20001	D
	20004	E

DRN. NANCY MOORE DATE 12/2/70
CHK'D DATE
ENG. DATE
PROD. DATE

TRANSISTOR & DIODE CONVERSION CHART

DEC	EIA	DEC	EIA
D684	IN3604	2N2904	SAME
DEC30098	2N30098		

digital EQUIPMENT CORPORATION MAYNARD, MASSACHUSETTS

TITLE HEAD I VER G350

SIZE D CODE CS NUMBER G350-0-1 REV E

PRINTED CIRCUIT BE

D

Fish

DEC FORM NO. 000116