digital

EK-TU16-IP-001

ILLUSTRATED PARTS BREAKDOWN

TU16
dec magtape

HOW TO USE THE IPB

GENERAL

This IPB is compiled following the organization and nomenclature of the engineering drawing structure.

MAJOR ASSEMBLY LOCATOR

The Major Assembly Locator (first illustration) is an index that provides a description and a figure reference for all illustrations used in this manual.

INDENTED PARTS LIST

This manual identifies each assembly being broken down (figure reference callout), and all parts of that assembly. Further breakdown of an assembly is shown by an asterisk (*) preceding the item callouts in the Description Column. The number of asterisks preceding an item is used to denote the subordination of that item with respect to the Major Assembly. A single asterisk preceding an item description indicates that the item is part of the major assembly being illustrated. Items that are subordinate to single asterisks items, are denoted by two asterisks (**) and immediately follow the related single asterisk item. Additional asterisks are used, as required, to denote further subordination. This system of part identification, provides a means for the user to identify the next higher assembly item and make alternate selections for parts when the required replacement part or assembly is not immediately available.

COLUMN CALLOUT DESCRIPTION

Figure & Item — Indicates the figure number and item number of each part.

Description — Lists the name of the part and pertinent specifications (when required). Asterisks preceding the description denote the subordination of the part to the next higher assembly.

DEC Part No. — Lists the DEC part ordering number. A blank in this column indicates a DEC part number was not assigned at the time of publication.

ECO Cut-In — The notation at the top of this column indicates the ECO level of the system (option), at which the IPB was initially prepared. Subsequent ECO level designations, that modify existing parts or add new parts to the device, are inserted in the ECO Cut-In column next to the part that is added or modified. A bracket ([) preceding the item description is used to indicate the parts affected by ECO's.

Vendor Code/Part No. — Indicates vendor parts that are not stocked by DEC. Refer to the Field Service Spares Catalog (vendor part number to DEC part number) for the vendor code cross-reference.

Used On Code — Letters in this column correspond to the variation codes assigned in Figure 1. Parts with an Alpha notation(s) are used only in those option variations. A blank indicates that the part is used on all option variations.

Ref Fig No. — A cross reference between illustrations. For each Major Assembly, the number in this column denotes the figure of the next higher assembly. For all subassemblies, the number in this column denotes the figure showing additional detailed breakdown.

SYMBOL USAGE

Hardware Designators — Alpha designators for screws (S), washers (W), nuts (N), and retaining rings (R) are inserted after the item number callouts on the illustration when stacked item numbers are used.

Attaching Hardware — The @ symbol is inserted before any part that is used as attaching hardware. Attaching hardware is denoted as those parts that are not an integral part of the referenced assembly.

(NFR) Not Field Repairable — The (NFR) symbol is inserted after any assembly that is not to be field dismantled.

Other Symbols — Any other symbols that are required for kits, accessories, etc., will be explained and appear as part of the item description.

REVISION HISTORY

PRINTING	ECO LEVEL		DATE	PAGES AFFECTED
1st Printing	TU16	00012-00012	7-23-75	N/A
	70-06501	00011-00011		
	70-06743	00000-00000		
	70-09637	00000-00000		
	70-09640	00000-00000		
	70-09644	00000-00000		
	70-09635	00002-00002		
	70-09636	00001-00001		
	70-09558	00002-00002		
	70-09594	00000-00000		
	70-09593	00000-00000		
	70-10121	00001-00001		

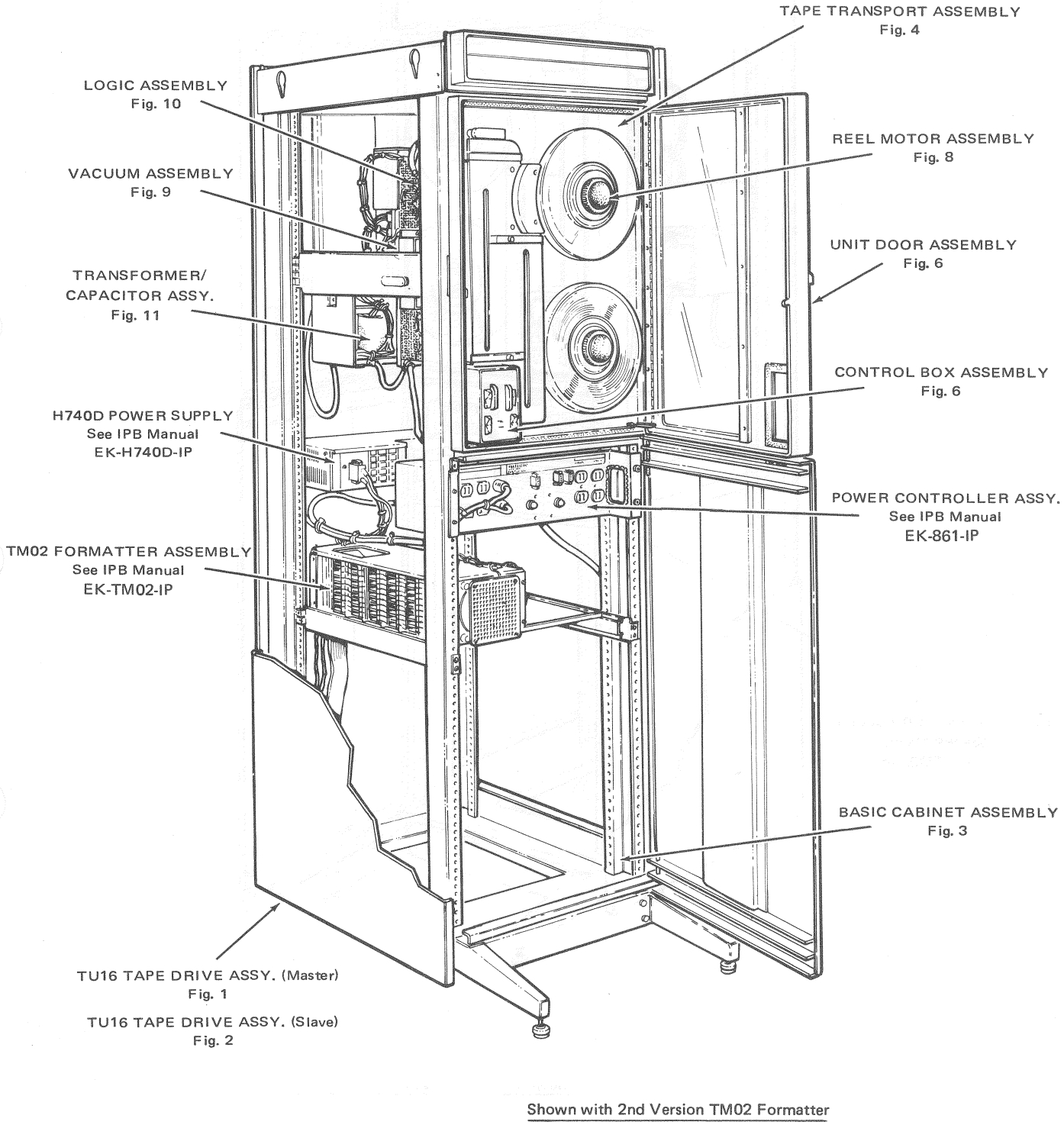

Shown with 2nd Version TM02 Formatter

TU16-01

Major Assembly Locator, Model TU16 Magnetic Tape Unit (Sheet 1 of 2)

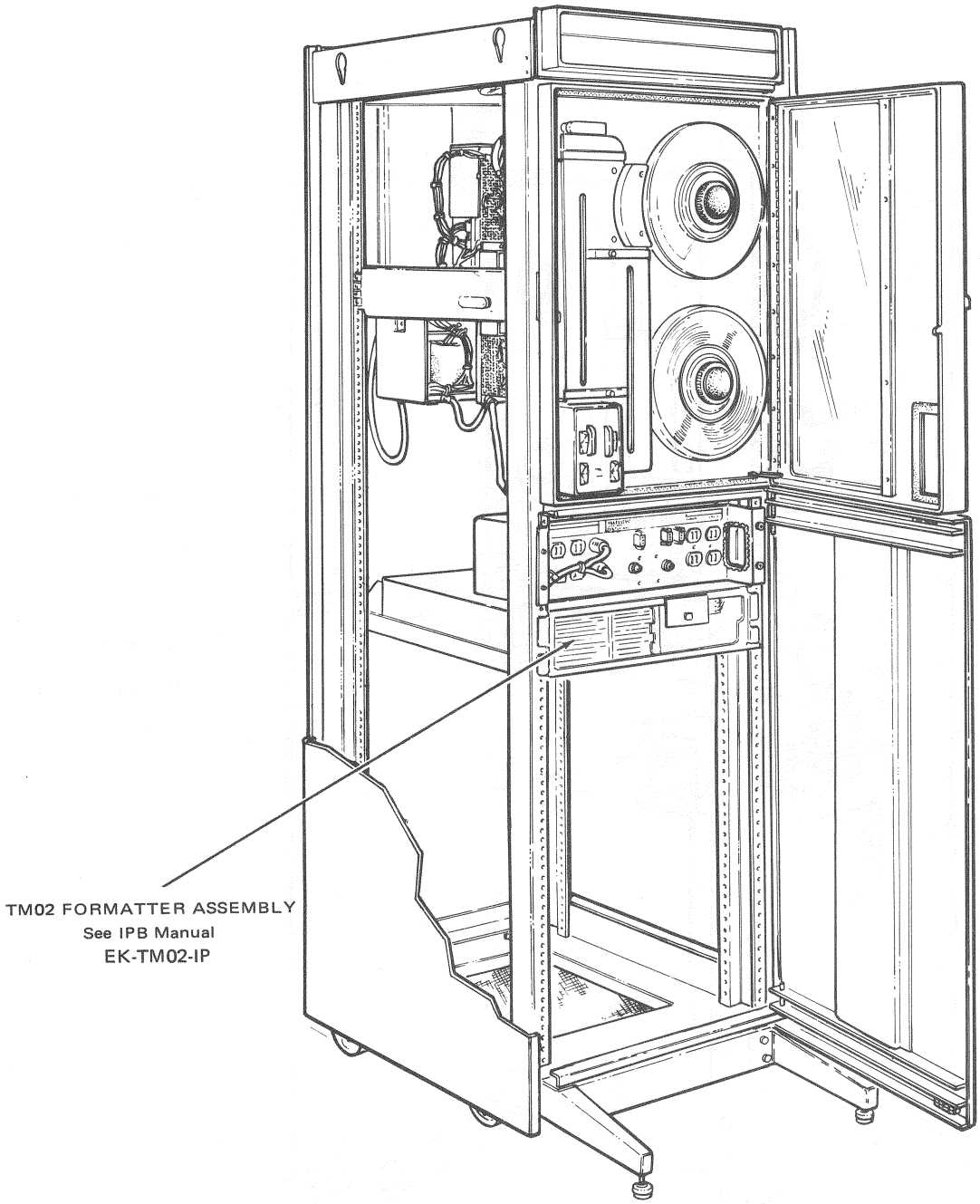

Shown with 1st Version TM02 Formatter

TU16-02A

Major Assembly Locator, Model TU16 Magnetic Tape Unit (Sheet 2 of 2)

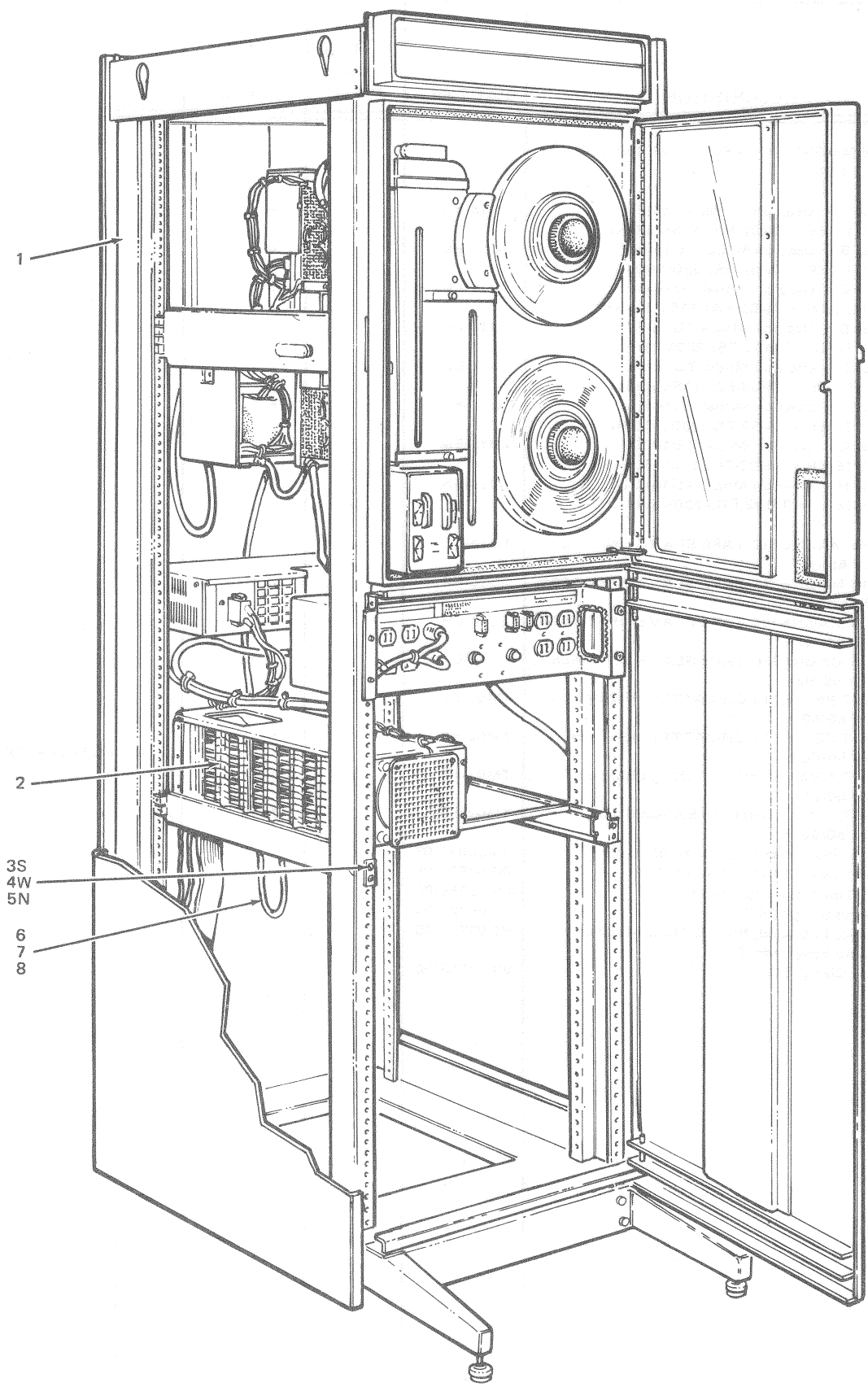

Figure 1. Model TU16 Magnetic Tape Drive Assembly (Master)

FIG & ITEM NO.	DESCRIPTION	DEC PART NO.	ECO CUT-IN TU16 00012	USED ON CODE	VENDOR CODE	VENDOR PART NO.	REF FIG NO.
1–	TU16 MAGNETIC TAPE DRIVE ASSEMBLY (MASTER)						
	Code A – Used on Model TU16-EA (TU16-EE + TM02-FA) 115V 60 Hz	TU16-EA		A			
	Code B – Used on Model TU16-EB (TU16-EF + TM02-FB) 230V 60 Hz	TU16-EB		B			
	Code C – Used on Model TU16-EC (TU16-EH + TM02-FA) 115V 50 Hz	TU16-EC		C			
	Code D – Used on Model TU16-ED (TU16-EJ + TM02-FB) 230V 50 Hz	TU16-ED		D			
	Code E – Used on Model TU16-EK (TU16-EE + TM02-FC) 115V 60 Hz	TU16-EK		E			
	Code F – Used on Model TU16-EL (TU16-EF + TM02-FD) 230V 60 Hz	TU16-EL		F			
	Code G – Used on Model TU16-EM (TU16-EH + TM02-FC) 115V 50 Hz	TU16-EM		G			
	Code H – Used on Model TU16-EN (TU16-EJ + TM02-FD) 230V 50 Hz	TU16-EN		H			
1	*TU16 MAGNETIC TAPE SLAVE UNIT ASSY. 115V 60 Hz	TU16-EE		A, E			2
	*TU16 MAGNETIC TAPE SLAVE UNIT ASSY. 230V 60 Hz	TU16-EF		B, F			2
	*TU16 MAGNETIC TAPE SLAVE UNIT ASSY. 115 V 50 Hz	TU16-EH		C, G			
	*TU16 MAGNETIC TAPE SLAVE UNIT ASSY. 230 V 50 Hz	TU16-EJ		D, H			
2	*16 BIT PE/NRZI FORMATTER ASSEMBLY 115V 50/60 Hz	TM02-FA		A, C	See IPB Manual EK–TM02-IP		
	*16 BIT PE/NRZI FORMATTER ASSEMBLY 230V 50/60 Hz	TM02-FB		B, D			
	*16 BIT NRZI FORMATTER ASSEMBLY 115V 50/60 Hz	TM02-FC		E, G			
	*16 BIT NRZI FORMATTER ASSEMBLY 230V 50/60 Hz	TM02-FD		F, H			
3	*Screw, Phl. Truss Hd. No. 10-32 x .62	90-06074-03					
4	*Washer, Ext. Tooth Lock No. 10	90-07651-00					
5	*Nut, Tinnerman No. 10-32	90-07786-00					
6	*Ground Strap (38")	12-05724-00					
7	*Tubing, Extruded, Blk 3/8" (covering for Ground Strap Item 6)	91-07245-00					
8	*Cable Clamp 3/8"	90-07083-00					

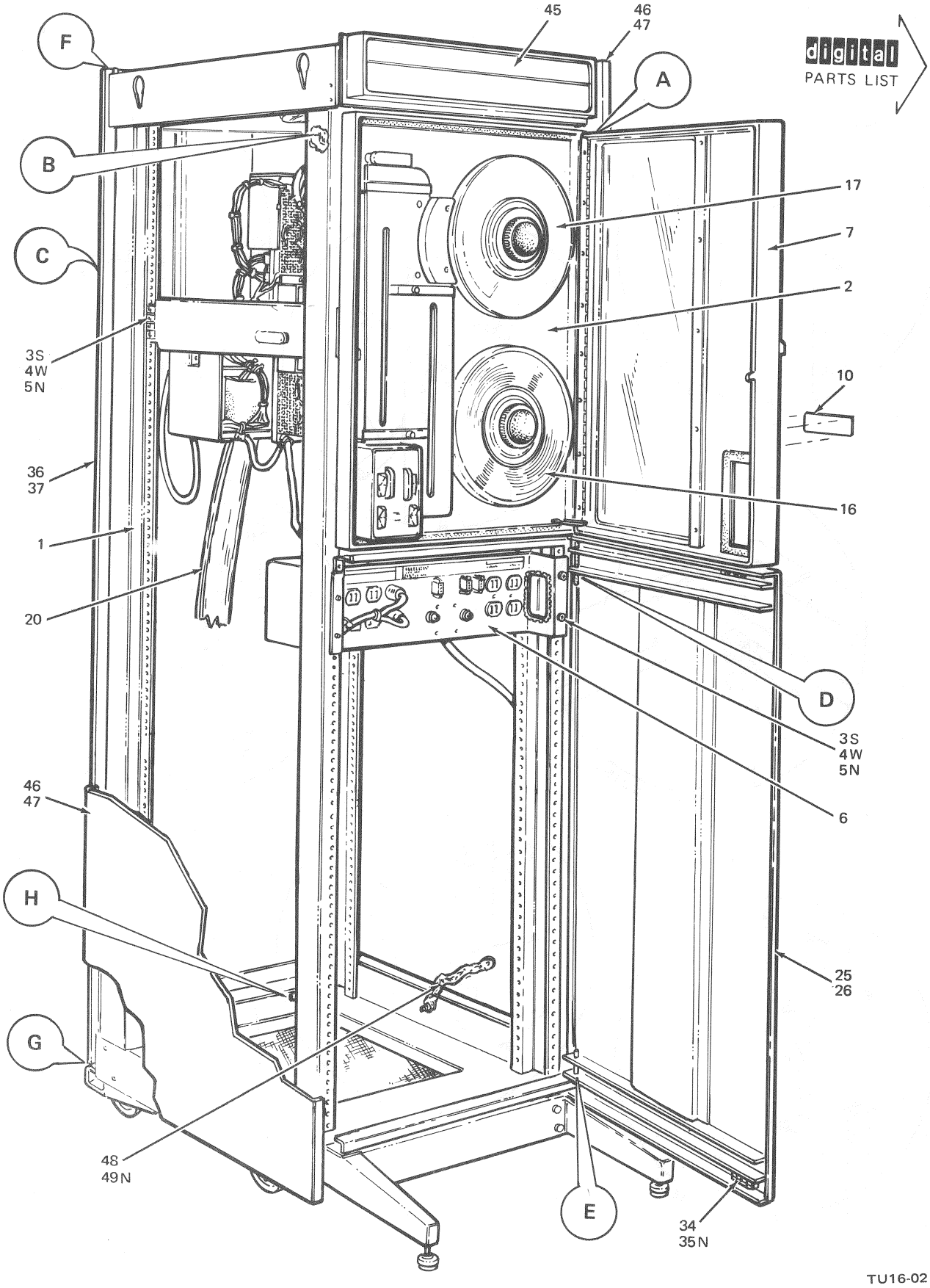

Figure 2. Model TU16 Magnetic Tape Unit (Slave) (Sheet 1 of 2)

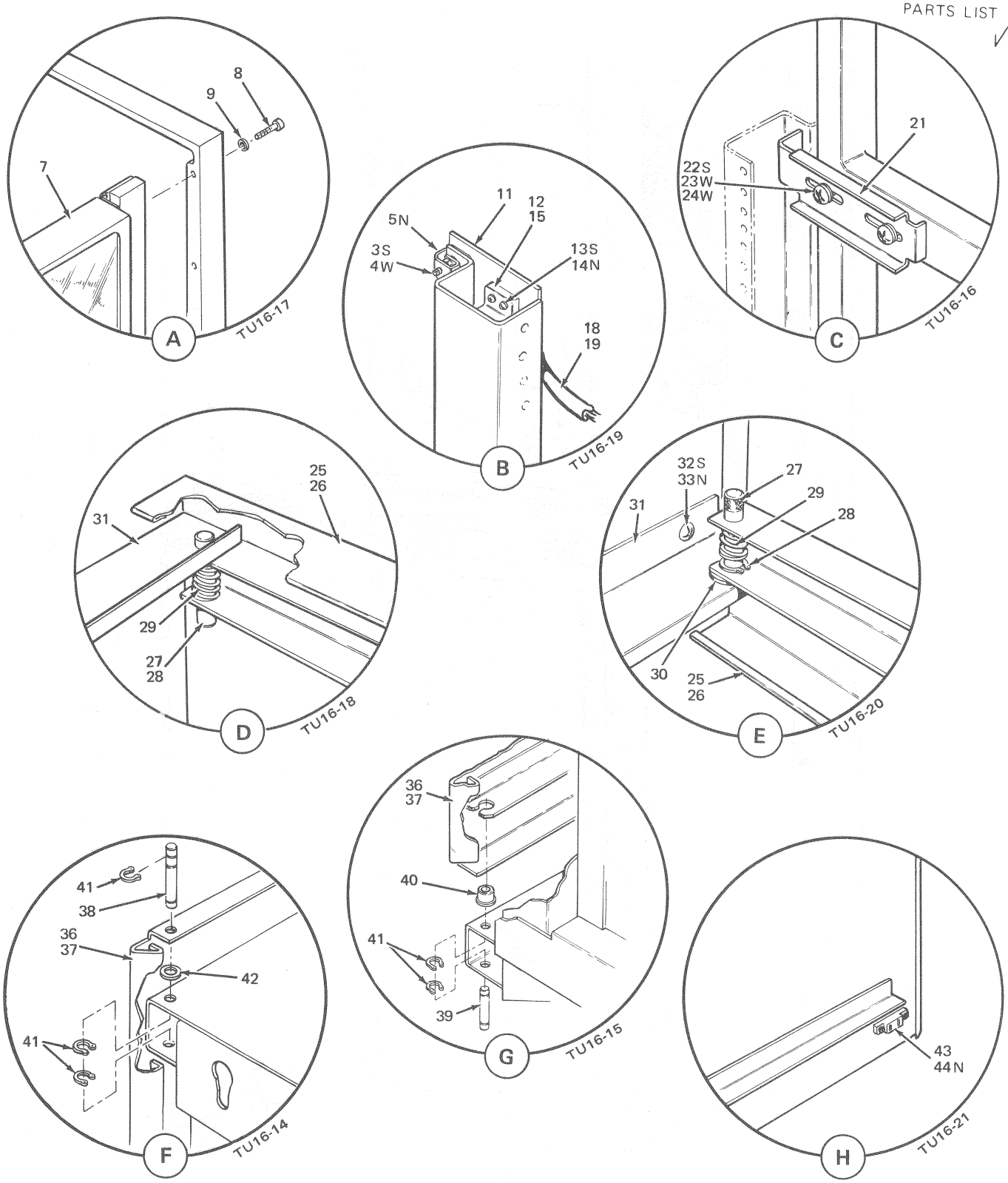

Figure 2. Model TU16 Magnetic Tape Unit (Slave) (Sheet 2 of 2)

FIG & ITEM NO.	DESCRIPTION	DEC PART NO.	ECO CUT-IN TU16 00012	USED ON CODE	VENDOR CODE	VENDOR PART NO.	REF FIG NO.
2–	MAGNETIC TAPE SLAVE UNIT, 45 IPS, 9 Track PE/NRZI 115V 60 Hz	TU16-EE		A,E			1
	MAGNETIC TAPE SLAVE UNIT, 45 IPS, 9 Track, PE/NRZI 230V 60 Hz	TU16-EF		B,F			1
	MAGNETIC TAPE SLAVE UNIT, 45 IPS, 9 Track PE/NRZI 115V 50 Hz	TU16-EH		C,G			1
	MAGNETIC TAPE SLAVE UNIT, 45 IPS, 9 Track PE/NRZI 230V 50 Hz	TU16-EJ		D,H			1
1	*CABINET ASSEMBLY (Basic) 115V)	70-06501-12		A,E,C,G			
	*CABINET ASSEMBLY (Basic) (230V)	70-06501-41		B,F,D,H			3
2	*TAPE TRANSPORT ASSEMBLY 60 Hz	70-09634-01		A,E,B,F			4
	*TAPE TRANSPORT ASSEMBLY 50 Hz	70-09634-02		C,G,D,H			4
3	*Screw, Phl. Truss Hd. No. 10-32 x .62	90-06074-03					
4	*Washer, Ext. Tooth Lock No. 10	90-07651-00					
5	*Nut, Tinnerman No. 10-32	90-07786-00					
6	*POWER CONTROL ASSEMBLY 115V	861-C		A,E,C,G	See IPB Manual EK-861-IP		
	*POWER CONTROL ASSEMBLY 230V	861-B		B,F,D,H			
7	*UNIT DOOR ASSEMBLY	70-06743-00					5
8	*Screw, Soc Hd. Cap No. 6-32 x 1.25	90-08325-08					
9	*Washer, Split Lock No. 6	90-07801-00					
10	*Logo, Special TU16, 9 Channel	74-11637-00					
11	*Plate, Terminal Strip	74-07607-00					
12	*Terminal Strip	90-06902-00					
13	*Screw, Phl. Pan Hd. No. 6-32 x .69	90-07794-01					
14	*Nut, Kep No. 6-32	90-06560-00					
15	*Connector, Solderless	90-07928-00					
16	*Tape Reel, Full	18-09543-03					
17	*Tape Reel, Take-up	12-10346-00					
18	*Power Cord, 115V	17-00006-06		A,E,C,G			
19	*Power Cord, 230V	17-00016-06		B,F,D,H			
20	*I/O CABLE ASSEMBLY (10 Ft.)	BC06R-10					
21	*Bracket, Shipping	74-11374-00					
22	*Screw, Phl. Truss Hd. No. 10-32 x 1.0	90-06077-03					
23	*Washer, Flat (.347 x .218 ID x .062)	90-06664-00					
24	*Washer, Split Lock No. 10	90-07906-00					
25	*MIDDLE DOOR ASSEMBLY	H950-JD					
26	**Middle Door (19")	74-07515-04					
27	**Pin, Short Door	74-06763-00					
28	**Ring, Retaining	90-07184-00					
29	**Spring (5/16 ID x 13/32 OD x 1-1/8)	90-07097-00					
30	**Washer, Nylon (5/16 ID x 7/8 OD x 1/8)	90-08193-00					
31	**Support, Short Door Pivot	74-06807-00					
32	**Screw, Phl. Pan Hd. Pan No. 10-32 x 5/8	90-06074-01					
33	**Nut, Speed No. 10-32 Tinnerman	90-07786-00					
34	**Magnet No. A-9765-PT Amerock	12-09165-00					
35	**Nut, Kep No. 6-32	90-06560-00					
36	*FULL LENGTH DOOR ASSEMBLY	H950-BA					
37	**Full Length Door (RH)	74-06708-01					
38	**Pin, Door	74-06671-00					
39	**Pin, Door	74-06672-00					
40	**Bushing, Pivot	74-06702-00					
41	**Ring, Retaining	90-07184-00					
42	**Washer, Nylon (1/2 OD x 11/32 ID x 1/16)	12-09163-00					
43	**Magnet No. A-9765-PT Amerock	12-09165-00					
44	**Nut, Kep No. 6-32	90-06560-00					
45	*Panel, Logo	74-07349-00					
46	*END PANEL ASSEMBLY (See Note)	H952-A					
47	*FILLER STRIP ASSEMBLY (See Note)	H952-G					
48	*Ground Strap (10 in.)	90-08887-00					
49	*Nut, Kep	90-06568-00					

Note:
The correct Part No. Variation for Items 46, 47 should be determined by the System that the TU16 is to be included with.

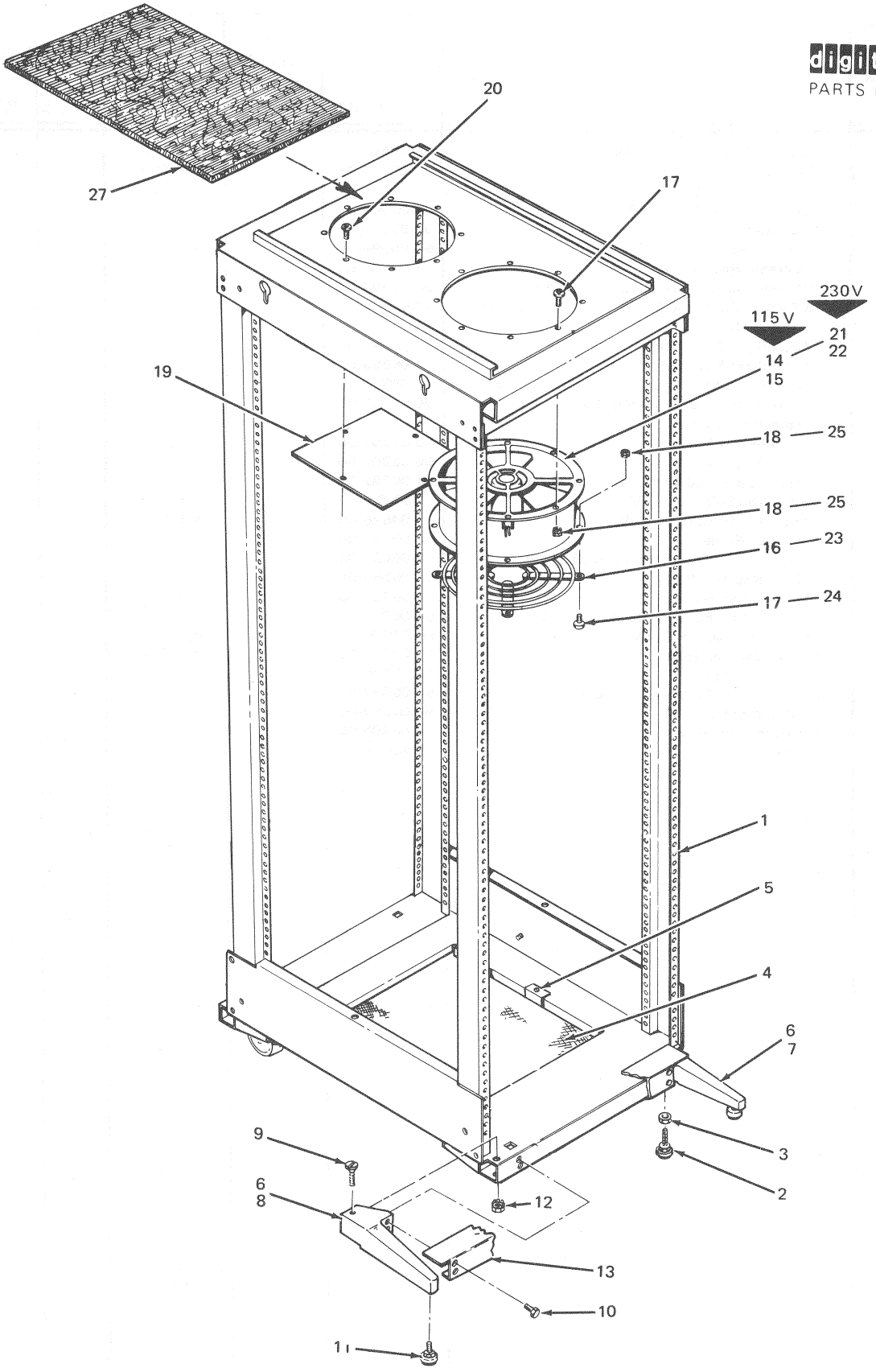

Figure 3. Cabinet Assembly (19" Basic)

FIG & ITEM NO.	DESCRIPTION	DEC PART NO.	ECO CUT-IN 70-06501 00011	USED ON CODE	VENDOR CODE	VENDOR PART NO.	REF FIG NO.
3–	CABINET ASSEMBLY (19" Basic) 115V	70-06501-12		A,E,C,G			2
	CABINET ASSEMBLY (19" Basic) 230V	70-06501-41		B,F,D,H			
1	FRAME ASSEMBLY (19")	H950-AA					
2	**Leveler	90-07600-00					
3	**Nut, Hex Lock (1/2–13 NC)	90-06596-00					
4	**Screen, Bottom Pan	74-11606-00					
5	**Screw, Sems Slotted Hd. No. 10-32 x 5/8	90-08323-00					
6	*STABILIZER FOOT ASSY. (Specify whether RH or LH)	H952-BA					
7	**Stabilizer Foot (RH)	74-06699-01					
8	**Stabilizer Foot (LH)	74-06699-02					
9	**Screw, Flat Hd. Shoulder, 1/4-20 x 2-5/8	90-08370-00					
10	**Screw, Phl. Hd. Truss No. 10-32 x 3/4 (Black Passivated)	90-07630-00					
11	**Leveler FB-2724	90-07601-00					
12	**Nut, Kep 1/4-20	90-08203-00					
13	*Kick Plate (Used with Stabilizer Feet)	74-06782-00					
14	*FAN ASSEMBLY 115V	H952-CA		A,E,C,G			
15	**Fan, CLZL Caravel 115V	12-04826-00		A,E,C,G			
16	**Guard, Finger	12-09175-00					
17	**Screw, Phl. Truss Hd. No. 8-32 x 3/8	90-06037-03					
18	**Nut, Kep No. 8-32	90-06563-00					
19	**Cover, Fan Hole	74-06706-00					
20	**Screw, Phl. Pan Hd. No. 6-32 x 1/2	90-06022-01					
21	*FAN ASSEMBLY 230V	H952-CB		B,F,C,G			
22	**Fan, Caravel 230V	12-09798-00		B,F,C,G			
23	**Guard, Finger	12-09175-00					
24	**Screw, Phl. Truss Hd. No. 8-32 x 3/8	90-06037-03					
25	**Nut, Kep No. 8-32	90-06563-00					
26	**Cover, Fan Hole	74-06706-00					
27	*Filter	H950-SA					

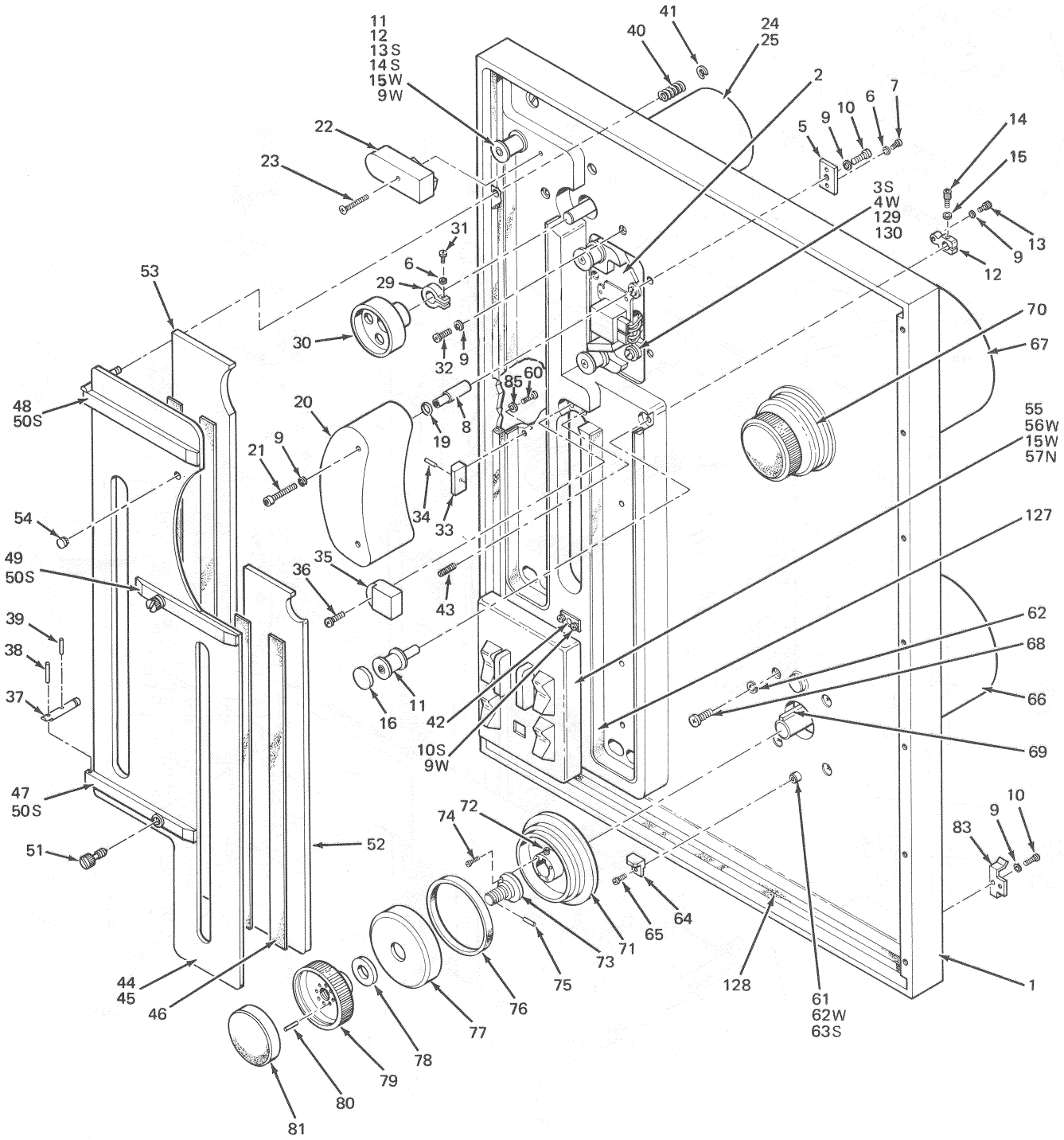

TU16-04

Figure 4. Tape Transport Assembly (Sheet 1 of 2)

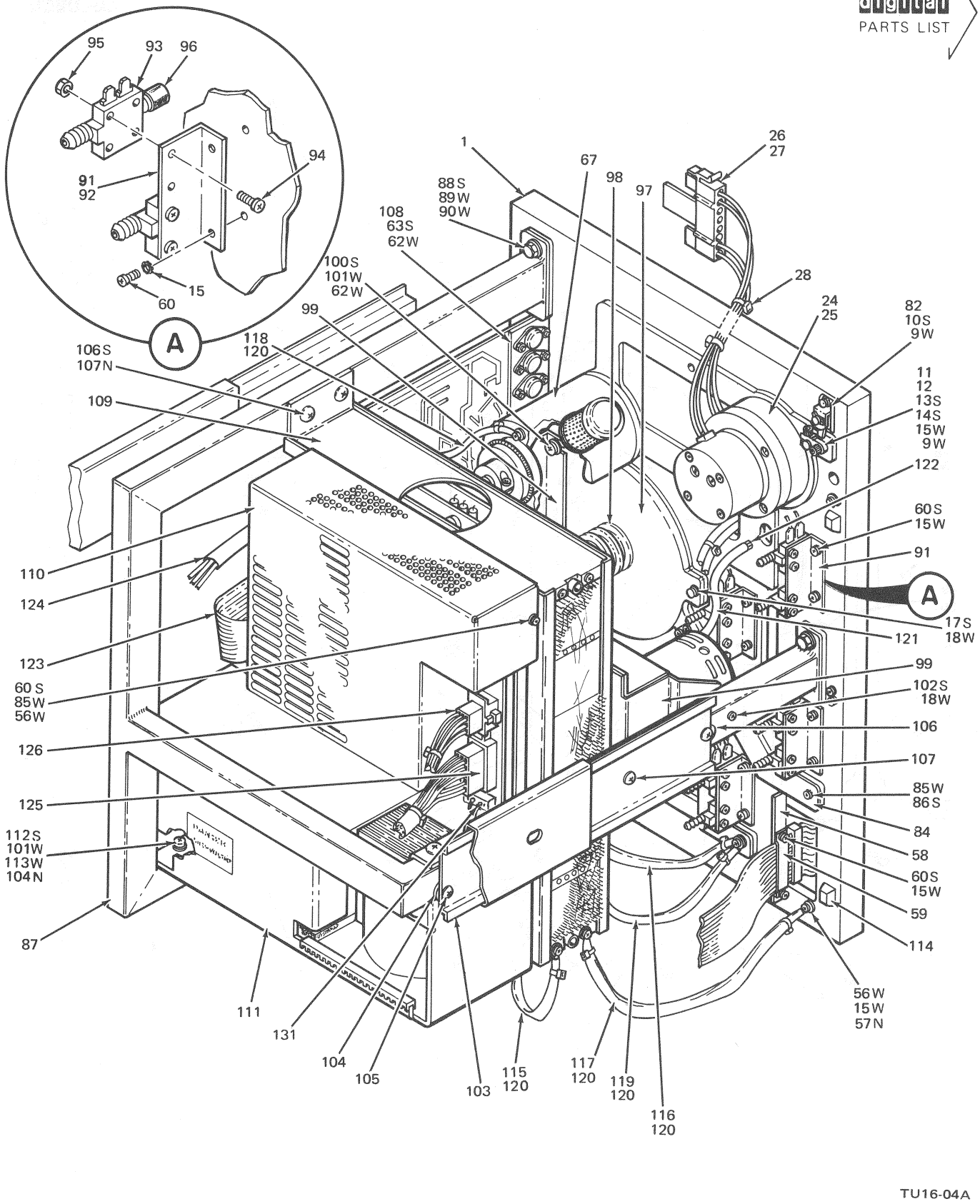

Figure 4. Tape Transport Assembly (Sheet 2 of 2)

FIG & ITEM NO.	DESCRIPTION	DEC PART NO.	ECO CUT-IN TU16 00012	USED ON CODE	VENDOR CODE	VENDOR PART NO.	REF FIG NO.
4–	TAPE TRANSPORT ASSEMBLY 60 Hz	70-09634-01		AE, BF			2
	TAPE TRANSPORT ASSEMBLY 50 Hz	70-09634-02		CG, DH			2
1	*Deck Plate	74-11373-00					
2	*HEAD PLATE ASSEMBLY (9-Track)	70-09885-01					
3	*Screw, Shoulder No. 10-32 x 1/2 Shft x 1/4 Lg.	90-07774-00					
4	*Washer, Int. Tooth No. 1214	90-06637-00					
5	*Plate, Standoff	74-07994-00					
6	*Washer, Split No. 4	90-06688-00					
7	*Screw, Phl. Pan Hd. No. 4-40 x 1/4	90-08301-01					
8	*Standoff	74-07995-00					
9	*Washer, Split No. 8	90-06690-00					
10	*Screw, Phl. Pan Hd. No. 8-32 x 5/16	90-06036-01					
11	*ROLLER GUIDE ASSEMBLY	12-10145-00					
12	*Clamp, Roller Shaft	74-07960-00					
13	*Screw, Soc. Hd. Cap No. 8-32 x 1/2	90-06338-00					
14	*Screw, Soc. Hd. Cap No. 6-32 x 1/2	90-08046-00					
15	*Washer, Split No. 6	90-07801-00					
16	*Cover, Right Roller Guide	74-11590-00					
17	*Screw, Phl. Pan Hd. No. 10-32 x 1/2	90-06370-01					
18	*Washer, Ext. Tooth No. 10	90-07651-00					
19	*"O" Ring 9/32 OD x 5/32 ID x 1/16	90-07616-00					
20	*Cover, Head	74-07986-00					
21	*Screw, Soc. Hd. Cap No. 8-32 x 1-1/4	90-08471-08					
22	*Cover, Roller Ramp	12-10365-00					
23	*Screw, Phl. Flat Hd. No. 6-32 x 1-3/8	90-08472-02					
24	*CAPSTAN MOTOR ASSEMBLY	70-09835-00					
25	**Motor, Capstan	12-09786-00					
26	**Connector, Pin Housing, Mate-N-Lok	12-09340-01					
27	**Terminal, Pin Contact	12-09378-00					
28	**Cable Tie	90-07031-00					
29	*Clamp, Capstan	74-07958-00					
30	*Capstan	74-07957-00					
31	*Screw, Soc. Hd. Cap No. 4-40 x 5/16	90-08936-08					
32	*Screw, Soc. Hd. Cap No. 8-32 x 3/8	90-06337-08					
33	*Catch, Door	74-07973-00					
34	*Roll Pin .090 x 1/2	90-06526-00					
35	*SENSOR EOT/BOT	12-11720-00					
36	*Screw, Phl. Pan Hd. No. 4-40 x 3/4	90-06015-01					
37	*Shaft, Hinge Pivot	74-07965-00					
38	*Pin, Dowel .125 x 3/4	90-08900-00					
39	*Roll Pin .125 x 3/8	90-06531-00					
40	*Spring, Compression	90-08898-00					
41	*Ring, Retainer	90-08137-00					
42	*Hold Down, Cover	74-07939-00					
43	*Screw, Soc. Set No. 4-40 x 1/4	90-06320-00					
44	*BUFFER COLUMN ASSEMBLY	70-09639-00					
45	**Cover, Buffer Column	74-07969-00					
46	**Tape, Dbl. Sided 1/2 wide (Specify length)	90-07834-00					
47	**Hinge, Cover Bottom	74-07993-00					
48	**Hinge, Cover Top	74-08002-00					
49	**Brace, Cover	74-07966-00					
50	**Screw, Phl. Hd. Flat No. 6-32 x 1/4	90-06020-02					
51	**Screw, Captive No. 10 x 3/4	90-03105-00					
52	**Glass, Buffer Column	12-09919-00					
53	**Glass, Buffer Column	12-09918-00					

FIG & ITEM NO.	DESCRIPTION	DEC PART NO.	ECO CUT-IN TU16 00012	USED ON CODE	VENDOR CODE	VENDOR PART NO.	REF FIG NO.
4–							
54	**Plug, Button Dot	90-07051-00					
55	*CONTROL BOX ASSEMBLY	70-09637-00					6
56	*Washer, Flat No. 6	90-06680-00					
57	*Nut, Hex No. 6-32	90-06558-00					
58	*Bracket, Cable Clamp	74-11381-00					
59	*Plate, Pressure	74-09479-00					
60	*Screw, Phl. Pan Hd. No. 6-32 x 3/8	90-06022-01					
61	*READ/WRITE INTERLOCK ASSEMBLY	70-09640-00					7
62	*Washer, Split No. 10	90-07906-00					
63	*Screw, Phl. Pan Hd. No. 8-32 x 1/2	90-06043-03					
64	*Angle, Solenoid Shaft	74-07961-00					
65	*Screw, Phl. Flat Hd. No. 2-56 x 3/16	90-06000-02					
66	*REEL MOTOR ASSEMBLY (Bottom Motor)	70-09644-01					8
67	*REEL MOTOR ASSEMBLY (Top Motor)	70-09644-02					8
68	*Screw, Soc. Hd. Cap No. 10-32 x 5/8	90-06347-08					
69	*Key	74-07984-00					
70	*REEL HUB ASSEMBLY	70-09641-00					
71	**Support, Reel	74-07980-00					
72	**Screw, Soc. Set No. 8-32 x 1/4	90-06301-10					
73	**Guide, Reel	74-07983-00					
74	**Screw, Phl. Flat Hd. No. 6-32 x 3/8	90-06022-02					
75	**Pin, Roll 3/32 x 11/16	90-06527-00					
76	**Ring, Compression	12-10021-00					
77	**Plate, Pressure	74-07982-00					
78	**Washer, Thrust	12-10030-00					
79	**Knob	74-07979-00					
80	**Pin, Roll 3/32 x 1/2	90-06526-00					
81	**Disk, Decorative	12-09212-00					
82	*Fastener, Pawl	12-11999-00					
83	*Clip, Door Stop	74-07951-00					
84	*Cover, Vacuum Channel	74-07990-00					
85	*Washer, Ext. Tooth No. 6	90-07801-00					
86	*Screw, Phl. Truss Hd. No. 6-32 x 5/16	90-06021-03					
87	*DECK FRAME	70-09631-00					
88	*Screw, Hex Hd. 1/4-20 x 3/4	90-06243-09					
89	*Washer, Flat, 1/4 ID	90-07792-00					
90	*Washer, Ext. Tooth Lock 1/4 ID	90-06724-00					
91	*SENSOR ASSEMBLY	70-09642-00					
92	**Bracket, Sensor	74-07954-00					
93	**Sensor, Low Pressure	12-10477-00					
94	**Screw, Phl. Pan Hd. No. 2-56 x 9/16	90-08024-01					
95	**Nut, Esna Stop No. 2-56	90-08053-00					
96	**Tubing, Rubber	91-07717-00					
97	*Adapter, Plenum Chamber	74-14391-00					
98	*Hose, Vacuum	74-11817-00					
99	*VACUUM ASSEMBLY 60 Hz	70-09638-01		A,E,B,F			9
	*VACUUM ASSEMBLY 50 Hz	70-09638-02		C.G,D,H			9

FIG & ITEM NO.	DESCRIPTION	DEC PART NO.	ECO CUT-IN TU16 00012	USED ON CODE	VENDOR CODE	VENDOR PART NO.	REF FIG NO.
4—							
100	*Screw, Pan Hd. No. 10-32 x 5/8	90-06074-01					
101	*Washer, Flat No. 10	90-06664-00					
102	*Screw, Phl. Truss Hd. No. 10-32 x 1-3/4	90-06080-03					
103	*Chassis Tracks	12-09252-01					
104	*Nut, Well No. 10-32	90-08896-00					
105	*Screw, Phl. Truss Hd. No. 10-32 x 3/4	90-06075-03					
106	*Nut, Well No. 1/4-20	90-08897-00					
107	*Screw, Phl. Truss Hd. No. 1/4-20 x 3/4	90-06077-03					
108	*POWER BOARD	H606-00					
109	*LOGIC ASSEMBLY	70-09635-00					10
110	*Cover, Regulator Board	74-11402-00					
111	*TRANSFORMER/CAPACITOR ASSEMBLY	70-09636-00					11
112	*Screw, Phl. Truss Hd. No. 10-32 x 1	90-06058-03					
113	*Washer, Flat No. 10	90-06664-00					
114	*Bumper, Rubber	12-09750-00					
115	*Strap, Ground, Janco 740-C-14-10	90-08887-00					
116	*Strap, Ground, Janco 740F-33-20	90-08990-00					
117	*Strap, Ground 12.6 in. Long	90-07682-00					
118	*Strap, Ground 21.0 in. Long	90-07682-00					
119	*Strap, Ground 20.0 in. Long	90-07682-00					
120	*Tubing 1/2 in. Extruded (Blk)	91-07246-00					
121	*Hose, Vinyl	91-07716-00					
122	*Hose Fitting No. 11752-1	12-09889-00					
123	*CABLE, JUMPER	BC05L-IC					
124	*HARNESS, Vacuum Switch (From J9)	70-09558-00					12
125	*HARNESS, Capacitor (From J3)	70-09594-00					13
126	*HARNESS, Servo Board (P4, P7 to J4, J7)	70-09593-00					14
127	*Tape, Scotchlite Reflective SH Type 2 (3M)	90-08332-00					
128	*Foam, Sticky Tape 3/8 x 3/8 No. 4765	90-08274-00					
129	*Spring, Compression	90-09673-00					
130	*Spacer, 3/8 OD x 1/4 ID x 0.002	90-09674-00					
	*Spacer, 3/8 OD x 1/4 ID x 0.003	90-09674-01					
	*Spacer, 3/8 OD x 1/4 ID x 0.004	90-09674-02					
	*Spacer, 3/8 OD x 1/4 ID x 0.005	90-09674-03					
	*Spacer, 3/8 OD x 1/4 ID x 0.006	90-09674-04					
	*Spacer, 3/8 OD x 1/4 ID x 0.007	90-09674-05					
	*Spacer, 3/8 OD x 1/4 ID x 0.008	90-09674-06					
	*Spacer, 3/8 OD x 1/4 ID x 0.010	90-09674-07					
	*Spacer, 3/8 OD x 1/4 ID x 0.012	90-09674-08					
	*Spacer, 3/8 OD x 1/4 ID x 0.014	90-09674-09					
	*Spacer, 3/8 OD x 1/4 ID x 0.016	90-09674-10					
	*Spacer, 3/8 OD x 1/4 ID x 0.020	90-09674-11					
131	*HARNESS, Vacuum Motor	70-10121-00					15

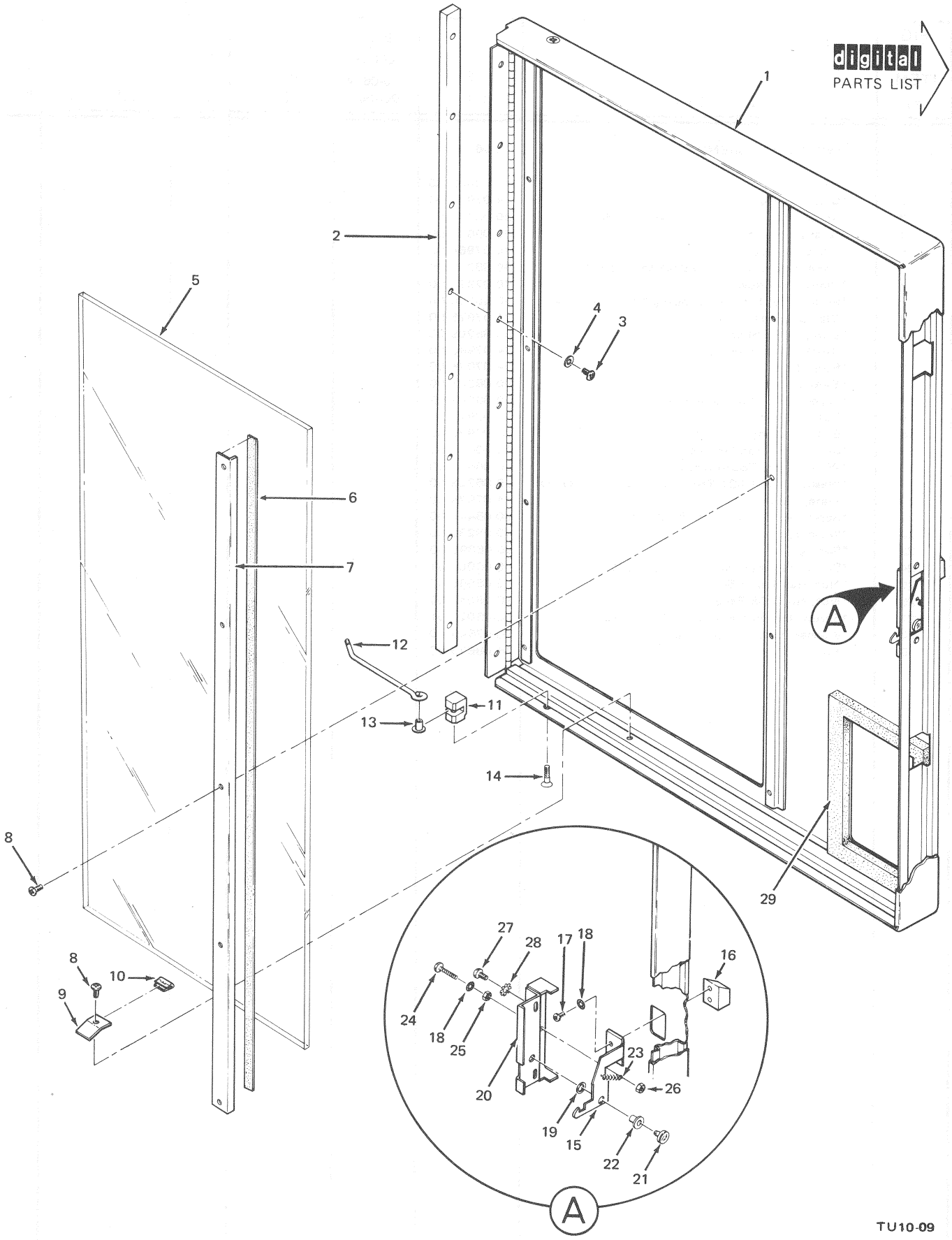

Figure 5. Unit Door Assembly

FIG & ITEM NO.	DESCRIPTION	DEC PART NO.	ECO CUT-IN 70-06743 00000	USED ON CODE	VENDOR CODE	VENDOR PART NO.	REF FIG NO.
5–	UNIT DOOR ASSEMBLY	70-06743-00					2
1	*Unit, Door	74-08003-00					
2	*Support, Door	74-07971-00					
3	*Screw, Phl. Pan Hd. No. 4-40 x 3/16	90-08032-01					
4	*Washer, Flat No. 4	90-06655-00					
5	*Window, Door	74-07964-00					
6	*Tape, Foam (Adhesive Backed) 1/8 x 1/4	90-08273-00					
7	*Clamp, Window	70-07977-00					
8	*Screw, Phl. Hd. Self-Tapping No. 6-32 x 1/4	90-08230-00					
9	*Clamp, Short	74-07975-00					
10	*Bumper, Rubber	90-08209-00					
11	*Block, Door Stop	74-07940-00					
12	*Stop, Door	74-07976-00					
13	*Eyelet	90-08253-00					
14	*Screw, Phl. Flat Hd. No. 8-32 x 3/4	90-06041-02					
15	*Latch, Door	74-07972-00					
16	*Button, Door	74-07970-00					
17	*Screw, Phl. Pan Hd. No. 2-56 x 1/4	90-06001-01					
18	*Washer, Int. Tooth No. 2	90-06631-00					
19	*Washer, Flat (.031 Thk. Nylon .375 x .187 ID)	90-06708-00					
20	*Plate, Latch	74-07974-00					
21	*Screw, Button Hd. No. 8-32 x 3/8 Nylok	90-08444-00					
22	*Washer	90-08232-00					
23	*Spring	90-08895-00					
24	*Screw, Phl. Pan Hd. No. 2-56 x 3/4	90-06006-01					
25	*Nut, Hex No. 2-56	90-06555-00					
26	*Nut, No. 2-56 Esna	90-08053-00					
27	*Screw, Phl. Pan Hd. No. 6-32 x 5/16	90-06021-01					
28	*Washer, Ext. Tooth No. 6	90-07649-00					
29	*Foam, Door	74-08879-00					

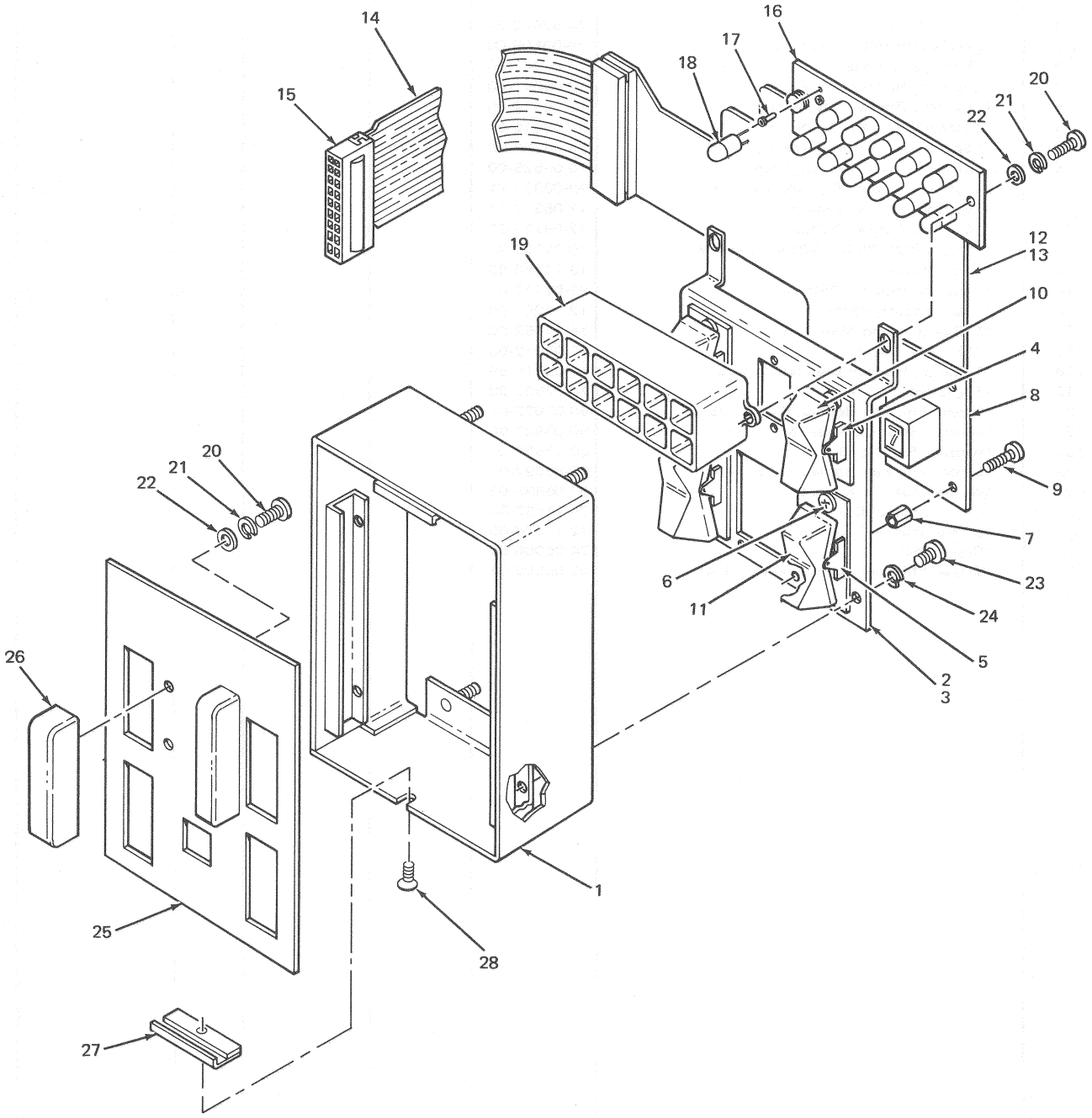

TU16-05

Figure 6. Control Box Assembly

FIG & ITEM NO.	DESCRIPTION	DEC PART NO.	ECO CUT-IN 70-09637 00000	USED ON CODE	VENDOR CODE	VENDOR PART NO.	REF FIG NO.
6--	CONTROL BOX ASSEMBLY	70-09637-00					4
1	*Box, Control	74-07942-00					
2	*SWITCH/PANEL ASSEMBLY	70-09805-00					
3	**Panel, Sub-Plate	74-07941-00					
4	**Switch, Rocker (Air Pax)	12-05941-00					
5	**Switch, Rocker (Stackpole)	12-09614-00					
6	**Screw, Phl. Self-Tap No. 4 x 5/16	90-09236-01					
7	**Spacer No. 6 Hole x 1/4 x 3/16	90-06796-00					
8	**SELECT SWITCH ASSEMBLY	70-09825-00					
9	**Screw, Phl. Self-Tap No. 4 x 7/16	90-08327-01					
10	**Button, Rocker Switch	12-05317-13					
11	**Button, Rocker Switch	12-09711-01					
12	**CONTROL BOX CABLE ASSEMBLY	70-09736-00					
13	***Flexprint	19-11566-00					
14	***Cable, Ribbon (3M)	91-07747-00					
15	***Connector, Socket	12-11206-00					
16	***Board, Lamp Mounting	74-11492-00					
17	***Socket, Light	90-07812-00					
18	***Lamp, Hudson Blue No. 2309G	12-09219-00					
19	*Egg Crate	74-07937-00					
20	*Screw, Phl. Pan Hd. No. 6-32 x 3/8	90-06022-01					
21	*Washer, Split Lock No. 6	90-07801-00					
22	*Washer, Flat No. 6	90-06655-00					
23	*Screw, Phl. Pan Hd. No. 6-32 x 1/4	90-06022-01					
24	*Washer, Int. Lock No. 6	90-06633-00					
25	*Panel, Control Box	74-11493-00					
26	*Guard, Rocker Switch	12-11576-00					
27	*Clip, Panel	74-08000-00					
28	*Screw, Phl. Flat Hd. No. 4-40 x 1/4	90-06009-02					

FIG & ITEM NO.	DESCRIPTION	DEC PART NO.	ECO CUT-IN 70-09640 00000	USED ON CODE	VENDOR CODE	VENDOR PART NO.	REF FIG NO.
7–	READ/WRITE INTERLOCK ASSEMBLY	70-09640-00					4
1	*Bracket, Solenoid	74-07963-00					
2	*Bracket, Adjusting	74-07967-00					
3	*Screw, Phl. Truss Hd. No. 6-32 x 5/16	90-06021-03					
4	*Washer, Ext. Tooth Lock No. 6	90-07649-00					
5	*Switch, Solenoid	12-09868-00					
6	*Screw, Phl. Pan Hd. No. 6-32 x 1/4	90-06020-01					
7	*Shaft, Solenoid	74-07962-00					
8	*Pin, Roll .06 x 1.0 in.	90-08329-00					
9	*Switch, Limit	12-09870-00					
10	*Screw, Phl. Pan Hd. No. 6-32 x 7/8	90-06027-01					
11	*Nut, Kep No. 6-32	90-06560-00					
12	*Screw, Phl. Pan Hd. No. 6-32 x 3/4	90-06026-01					
13	*Screw, Phl. Pan Hd. No. 4-40 x 1/2	90-06013-01					
14	*Nut, Kep No. 4-40	90-06557-00					
15	*Connector, Faston	90-07917-00					
16	*Connector, Socket Housing Mate-N-Lok (3 Pin)	12-09350-03					
17	*Terminal, Socket Contact	12-09379-00					
18	*Tie Wrap (Panduit)	90-07031-00					
19	*Wire, No. 22 AWG (Black)	91-07350-00					
20	*Wire, No. 22 AWG (Yellow)	91-07350-44					

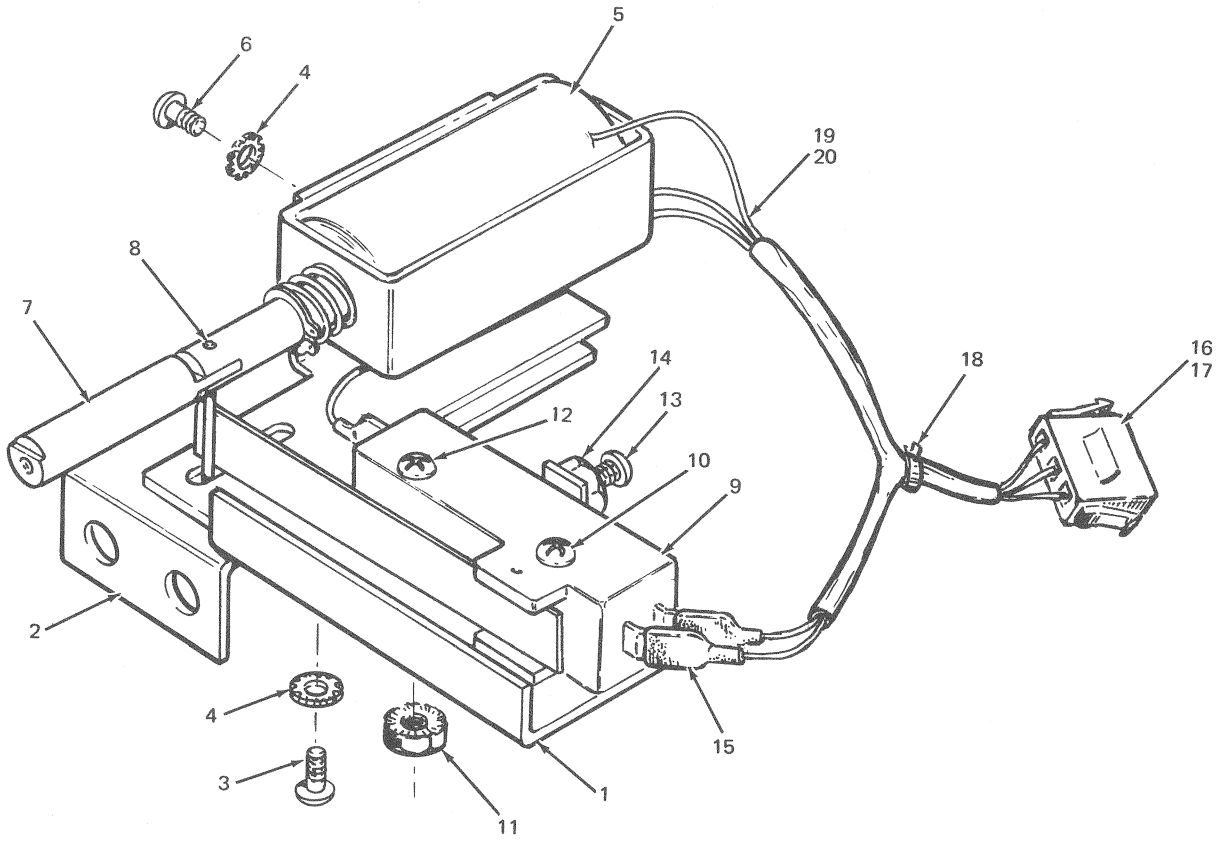

TU16-06

Figure 7. Read/Write Interlock Assembly

FIG & ITEM NO.	DESCRIPTION	DEC PART NO.	ECO CUT-IN	USED ON CODE	VENDOR CODE	VENDOR PART NO.	REF FIG NO.
8–	REEL MOTOR ASSEMBLY (Bottom Motor)	70-09644-01					4
	REEL MOTOR ASSEMBLY (Top Motor)	70-09644-02					
1	*Motor, Reel	12-09677-00					
2	*Brake, Reel Motor	12-10027-00					
3	*Screw, Phl. Pan Hd. No. 10-32 x 3/8	90-06071-01					
4	*Washer, Ext. Tooth Lock No. 10	90-07651-00					
5	*Filter, Automuffler	12-09956-00					
6	*Connector, (P8) Socket Housing 8 Pin Mate-N-Lok	12-09340-00					
7	*Terminal, Pin Contact	12-09378-00					

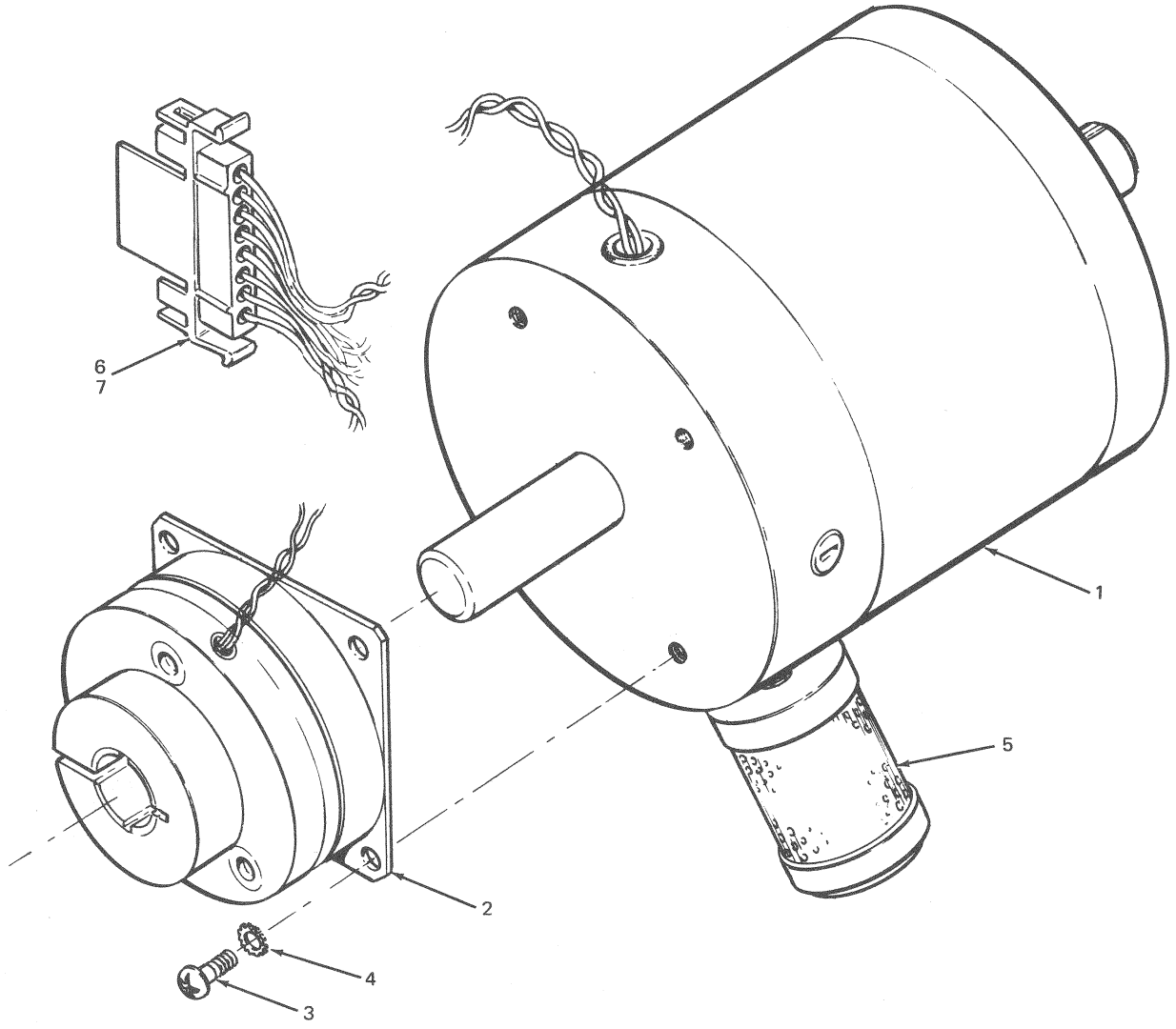

TU16-07

Figure 8. Reel Motor Assembly

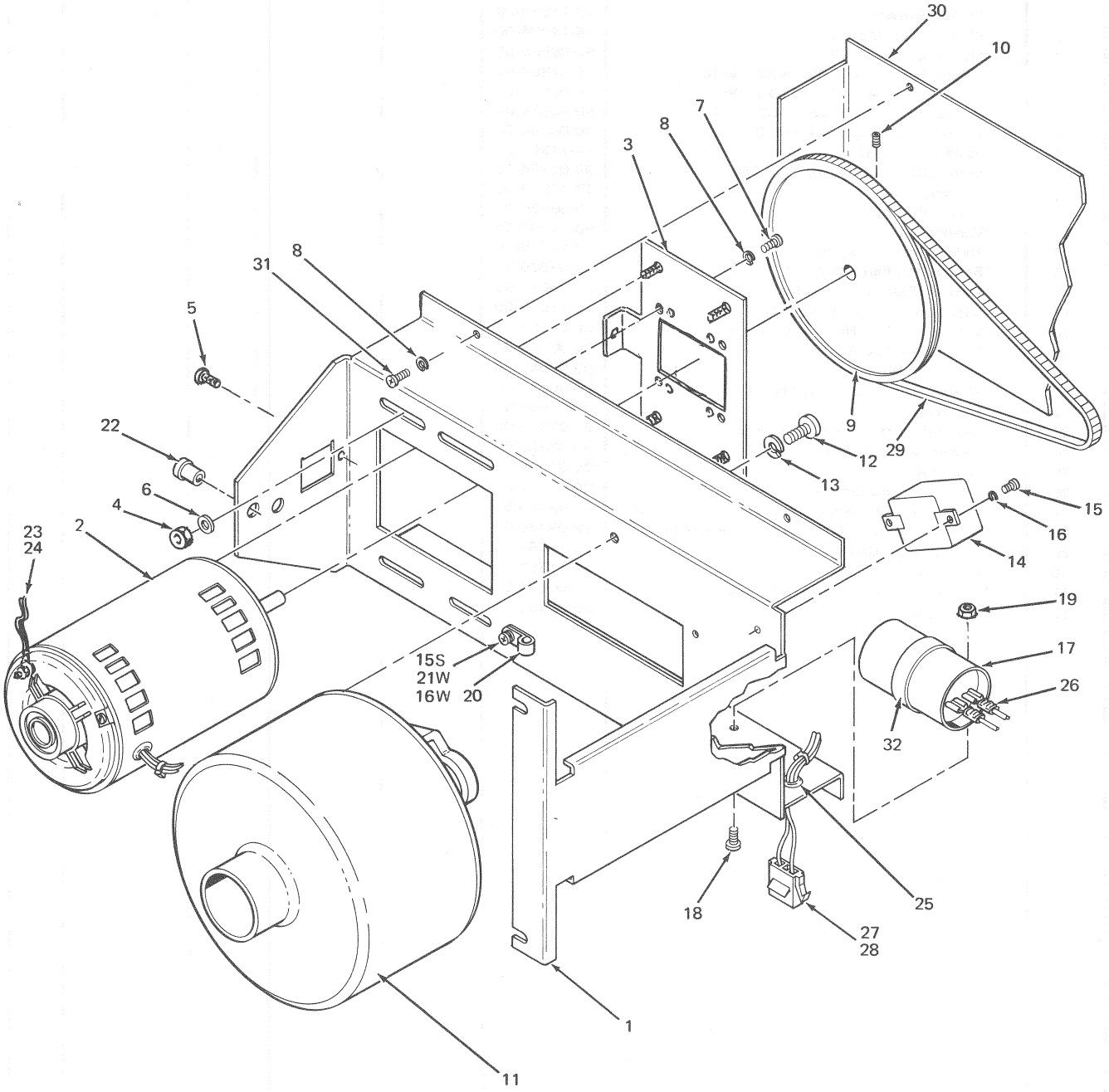

TU16-08

Figure 9. Vacuum Assembly

FIG & ITEM NO.	DESCRIPTION	DEC PART NO.	ECO CUT-IN TU16 00012	USED ON CODE	VENDOR CODE	VENDOR PART NO.	REF FIG NO.
9–	VACUUM ASSEMBLY 60 Hz	70-09638-01		A,E,B,F			4
	VACUUM ASSEMBLY 50 Hz	70-09638-02		C,G,D,H			
1	*Bracket, Blower Motor	74-11360-00					
2	*Motor, Blower	12-11639-00					
3	*Plate, Motor Mounting	74-14004-00					
4	*Nut, Kep No. 10-32	90-06565-00					
5	*Screw, Phl. Pan Hd. No. 8-32 x 9/16	90-07854-01					
6	*Washer, Flat .437 x .218 ID x .062	90-06664-00					
7	*Screw, Phl. Pan Hd. No. 8-32 x 1/2	90-06039-01					
8	*Washer, Hel. Spg. Lock No. 8	90-06690-00					
9	*Pulley 50/60 Hz	74-11362-01					
10	*Screw, Soc. Set No. 10-32 x 1/4	90-09174-10					
11	*Blower, (3-Stage)	12-11582-00					
12	*Screw, Phl. Pan Hd. No. 1/4-20 x 1/2	90-06056-01					
13	*Washer, Hel. Spg. Lock 1/4	90-07797-00					
14	*Relay, Motor Starting (R1)	12-11659-00					
15	*Screw, Phl. Pan Hd. No. 6-32 x 1/4	90-06020-00					
16	*Washer, Flat .312 x .125 x .027	90-06655-00					
17	*Capacitor (C1) 58.5 MFD 165 Vac 10%	10-11655-00					
18	*Screw, Phl. Pan Hd. No. 8-32 x 3/8	90-06037-01					
19	*Nut, Kep No. 8-32	90-06563-00					
20	*Clamp, Cable	90-07082-00					
21	*Washer, Int. Tooth Lock No. 6	90-06633-00					
22	*Nut, Well	90-08896-00					
23	*Ground, Wire, 14 AWG Black Insulated	91-07370-00					
24	*Eyelet No. 10 Crimp	90-07928-00					
25	*Grommet	90-07024-00					
26	*Connector, Solderless	90-07917-00					
27	*Connector, (J1) Socket Housing, Mate-N-Lok	12-09350-03					
28	*Terminal, Socket Contact (J1) Mate-N-Lok	12-09379-01					
29	*Belt, Blower Drive	12-11581-00					
30	*Guard, Blower Belt	74-11361-00					
31	*Screw, Phl. Pan Hd. No. 8-32 x 5/16	90-06036-01					
32	*Clamp, Capacitor	90-09598-00					

FIG & ITEM NO.	DESCRIPTION	DEC PART NO.	ECO CUT-IN 70-09635 00002	USED ON CODE	VENDOR CODE	VENDOR PART NO.	REF FIG NO.
10–	LOGIC ASSEMBLY (TU16)	70-09635-00					4
1	*Chassis, Logic	70-09630-00					
2	*HARNESS/LOGIC ASSEMBLY	70-10130-00					
3	**Wired Assembly	70-09605-00					
4	**HARNESS, Logic	70-09700-00					
5	***Connector, Pin Housing, 9 Pin, Mate-N-Lok	12-09351-09					
6	***Terminal, Pin Contact Mate-N-Lok	12-09378-01					
7	*Screw, Phl. Pan Hd. No. 6-32 x 7/8	90-06027-01					
8	*Washer, Ext. Tooth Lock	90-07649-00					
9	*Bracket, Cable Clamp	74-11535-00					
10	*Screw, Phl. Pan Hd. No. 6-32 x 5/16	90-06021-01					
11	*Screw, Soc. Hd. No. 8-32 x 1/4	90-09464-08					
12	*Plate, Pressure	74-09479-00					
13	*Guide, Card and Extractor	12-10699-00					
14	*Screw, Phl. Pan Hd. No. 4-40 x 5/16	90-06010-01					
15	*Washer, Int. Tooth Lock No. 4	90-06632-00					
16	*POWER SUPPLY PC CARD ASSEMBLY	54-10451-00					
17	*Screw, Phl. Flat Hd. No. 6-32 x 7/8	90-06027-01					
18	*Washer, Split Lock No. 8	90-06690-00					
19	*Cable Clamp	90-08340-00					

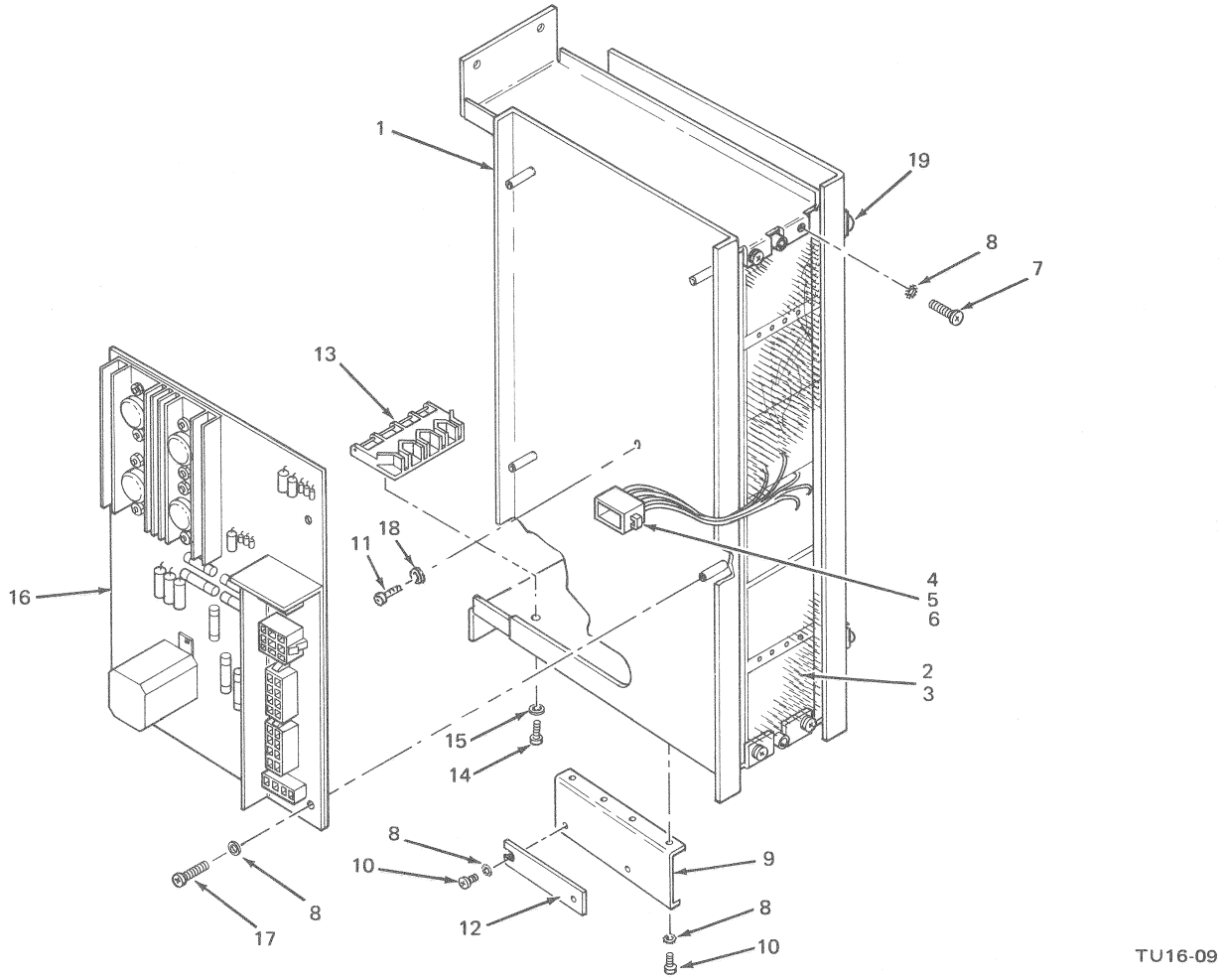

Figure 10. Logic Assembly

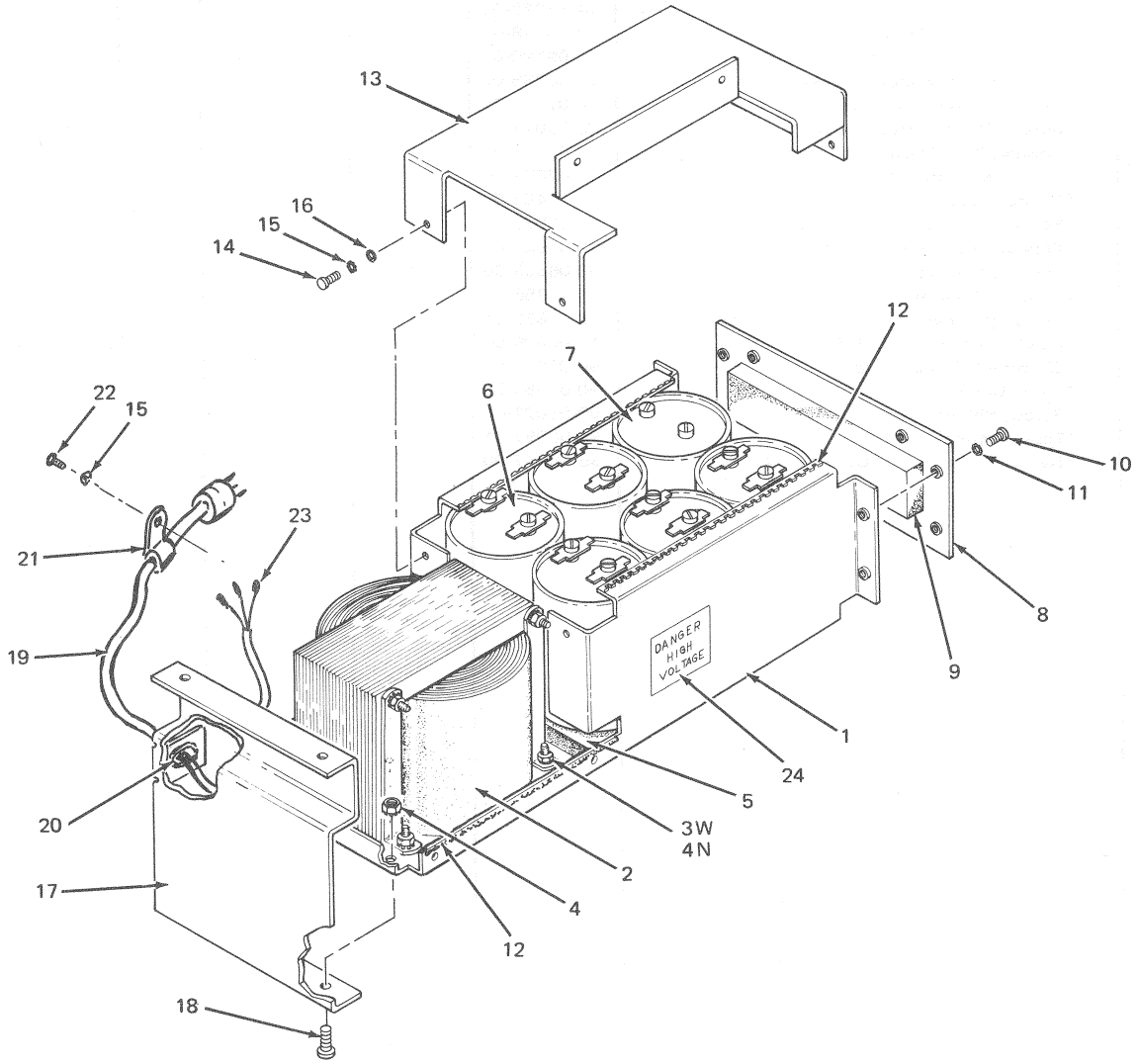

TU16-10

Figure 11. Transformer/Capacitor Assembly

FIG & ITEM NO.	DESCRIPTION	DEC PART NO.	ECO CUT-IN 70-09636 00001	USED ON CODE	VENDOR CODE	VENDOR PART NO.	REF FIG NO.
11–	TRANSFORMER/CAPACITOR ASSEMBLY	70-09636-00					4
1	*Bracket, Power Supply	53-08786-01					
2	*Transformer	16-11558-01					
3	*Washer, No. 10	90-06664-00					
4	*Nut, Kep No. 10-32	90-06565-00					
5	*Pad, Foam Spacer	74-12018-00					
6	*Capacitor, 35000 MFD 25V	10-00098-00					
7	*Capacitor, 80000 MFD 15V	10-09190-00					
8	*Cover, Power Supply Bracket	53-08785-00					
9	**Foam, Polyethylene White (.5 Thk)	90-07617-00					
10	*Screw, Phl. Pan Hd. No. 10-32 x 1/2	90-06073-01					
11	*Washer, Ext. Tooth Lock No. 10	90-07651-00					
12	*Grommet, Caterpillar	90-07037-00					
13	*Guard, Capacitor	74-11401-00					
14	*Screw, Phl. Pan Hd. No. 6-32 x 3/8	90-06022-01					
15	*Washer, Int. Tooth Lock No. 6	90-06633-00					
16	*Washer, Flat No. 6	90-06653-00					
17	*Bracket, Support	74-11386-00					
18	*Screw, Phl. Pan Hd. No. 10-32 x 7/16	90-06072-01					
19	*POWER CORD ASSEMBLY	17-00006-06					
20	*Grommet, Power Cord	90-08509-00					
21	*Cable Clamp	90-07083-00					
22	*Screw, Phl. Pan Hd. No. 6-32 x 1/4	90-06021-01					
23	*Tabs, Fast-on	90-06997-01					
24	*Decal, (DANGER HIGH VOLTAGE)	36-10267-00					

FIG & ITEM NO.	DESCRIPTION	DEC PART NO.	ECO CUT-IN 70-09558 00002	USED ON CODE	VENDOR CODE	VENDOR PART NO.	REF FIG NO.
12–	VACUUM SWITCH HARNESS ASSEMBLY	70-09558-00					4
1	*Connector, (P9) Pin Housing, 8 Pin Mate-N-Lok	12-09340-01					
2	*Connector, (P13) Pin Housing, 3 Pin Mate-N-Lok	12-09351-03					
3	*Terminal, Pin Contact	12-09378-00					
4	*Connector, Solderless	90-08836-00					
5	*Connector, Solderless	90-06780-00					
6	*Tie Wrap	90-07031-00					
7	*Shrink Tubing (Red)	91-07305-02					
8	*Shrink Tubing	91-07255-09					

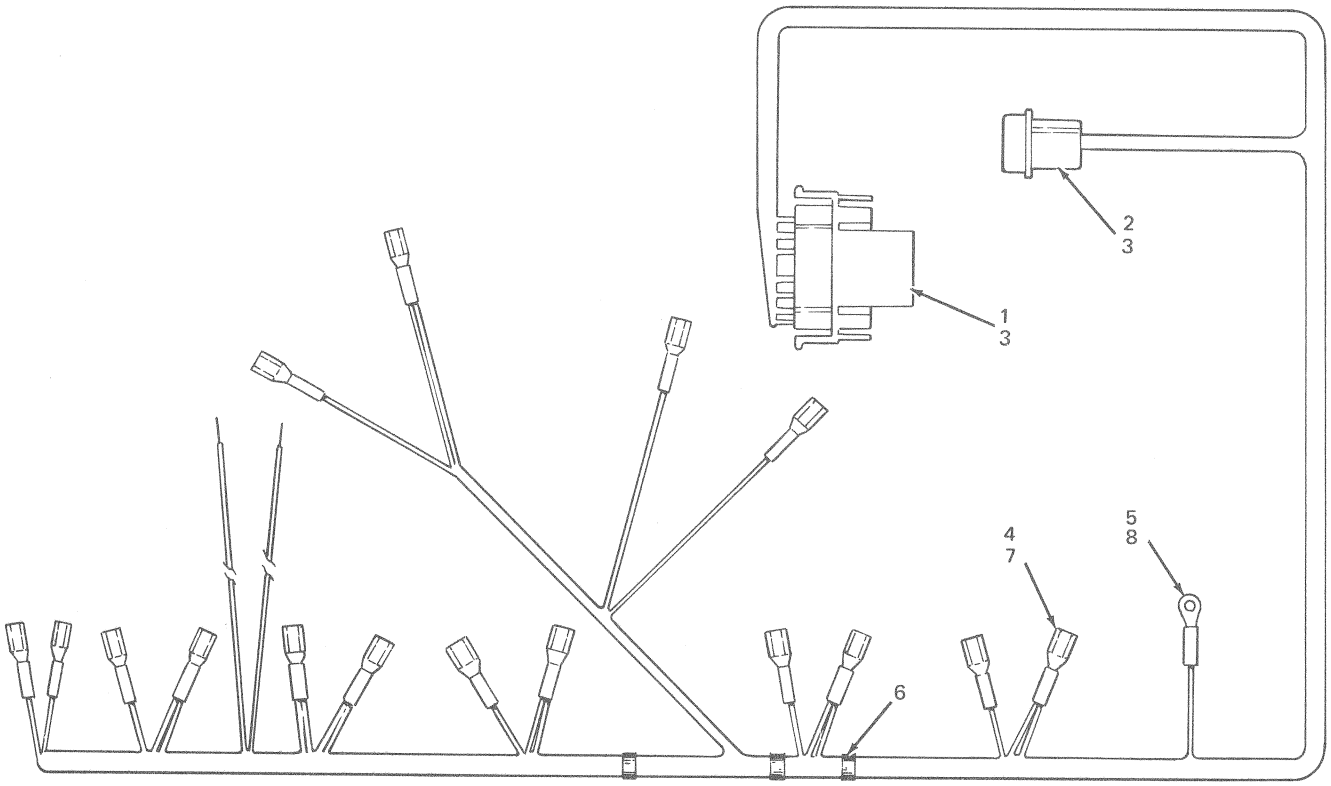

TU16-11

Figure 12. Vacuum Switch Harness Assembly

FIG & ITEM NO.	DESCRIPTION	DEC PART NO.	ECO CUT-IN 70-09594 00001	USED ON CODE	VENDOR CODE	VENDOR PART NO.	REF FIG NO.
13–	CAPACITOR HARNESS ASSEMBLY	70-09594-00					4
1	*Connector, (P3) Pin Housing, 15 Pin Mate-N-Lok	12-09351-15					
2	*Terminal, Pin Contact	12-09378-00					
3	*Connector, Solderless	90-07969-00					
4	*Tie Wrap	90-07031-00					

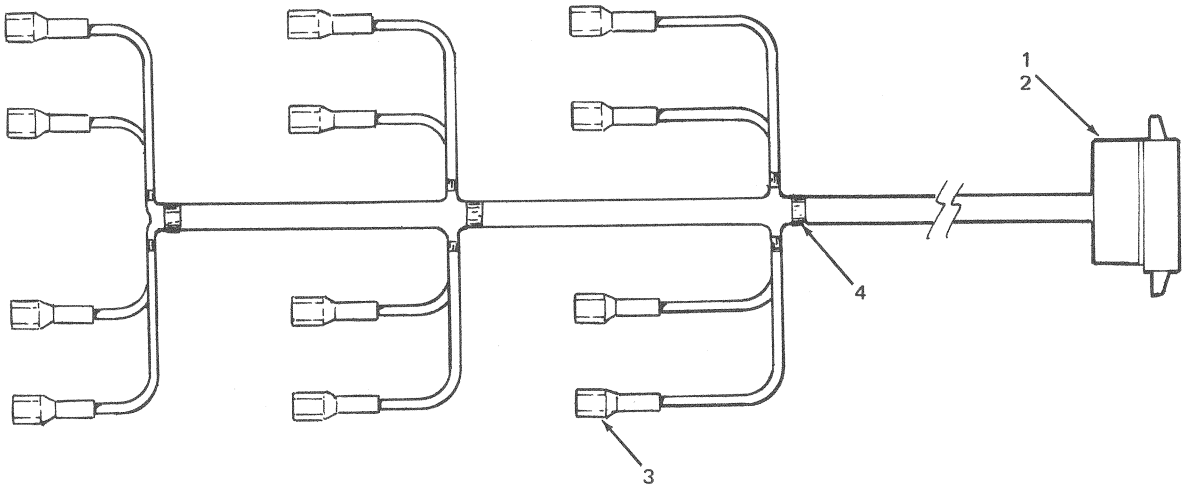

TU16-12

Figure 13. Capacitor Harness Assembly

FIG & ITEM NO.	DESCRIPTION	DEC PART NO.	ECO CUT-IN 70-09593 00000	USED ON CODE	VENDOR CODE	VENDOR PART NO.	REF FIG NO.
14–	SERVO BOARD HARNESS ASSEMBLY	70-09593-00					4
1	*Connector, (P4) Pin Housing, 9 Pin Mate-N-Lok	12-09351-09					
2	*Connector, (P7) Pin Housing, 8 Pin Mate-N-Lok	12-09340-01					
3	*Terminal, Pin Contact	12-09378-00					
4	*Tie Wrap	90-07031-00					

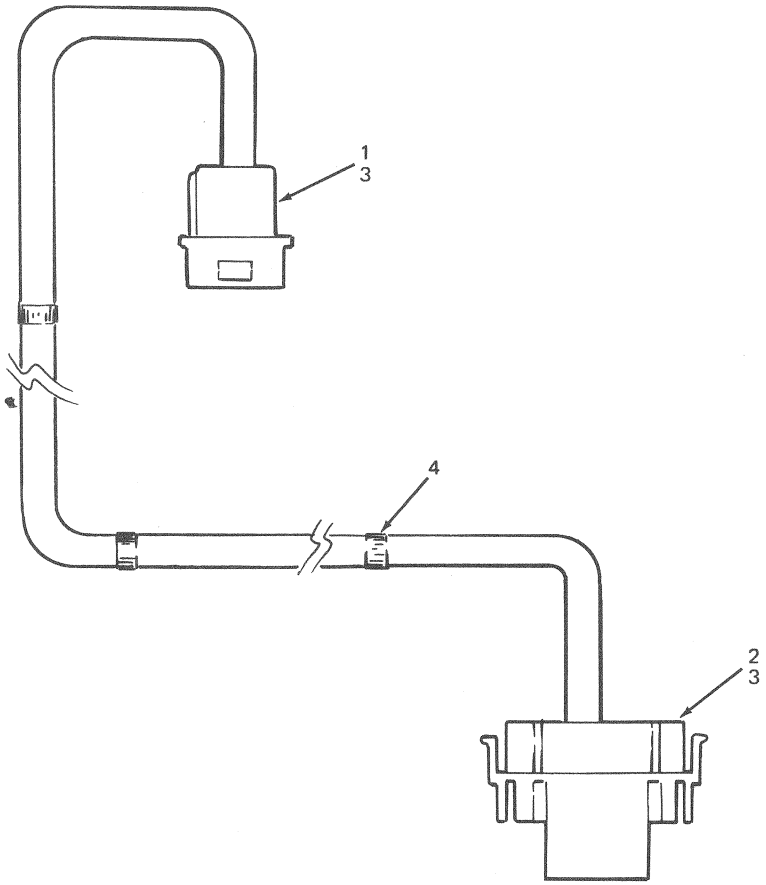

TU16-13

Figure 14. Servo Board Harness Assembly

FIG & ITEM NO.	DESCRIPTION	DEC PART NO.	ECO CUT-IN 70-10121 00001	USED ON CODE	VENDOR CODE	VENDOR PART NO.	REF FIG NO.
15–	VACUUM MOTOR HARNESS ASSEMBLY	70-10121-00					4
1	*Connector (P1) Pin Housing, 4 Pin, Mate-N-Lok	12-09351-04					
2	*Connector (P13) Pin Housing, 3 Pin, Mate-N-Lok	12-09351-03					
3	*Terminal, Pin Contact	12-09378-00					
4	*Wire, No. 14 AWG I.P.V.C. TWP	91-07440-29					
							DEC

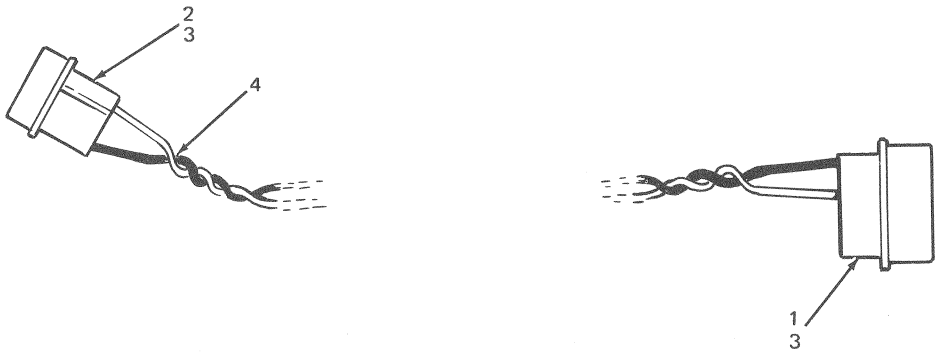

TU16-22

Figure 15. Vacuum Motor Harness Assembly