digital

RK05J

Engineering Drawings

Digital Equipment Corporation

The material herein is for information purposes only and is subject to change without notice. Digital Equipment Corporation assumes no responsibility for any errors which may appear herein.

These drawings and specifications herein are the property of Digital Equipment Corporation and shall not be reproduced or copied or used in whole or in part as the basis for the manufacture or sale of items without written permission.
Copyright © 1975, Digital Equipment Corporation

digital EQUIPMENT CORPORATION MAYNARD MASSACHUSETTS

DRAWING DIRECTORY

"THIS DRAWING AND SPECIFICATIONS, HEREIN, ARE THE PROPERTY OF DIGITAL EQUIPMENT CORPORATION AND SHALL NOT BE REPRODUCED OR COPIED OR USED IN WHOLE OR IN PART AS THE BASIS FOR THE MANUFACTURE OR SALE OF ITEMS WITHOUT WRITTEN PERMISSION. COPYRIGHT © , DIGITAL EQUIPMENT CORPORATION"

CUSTOMER PRINT SET INDEX

THIS IS PRINT SET [X]

SEQUENCE	
DRAWING DIRECTORY	B-DD-RKØ5J-Ø SHEET #1 ONLY
MODULE UTILIZATION LIST	C-MU-RKØ5-Ø-2
READ/WRITE	D-CS-G18Ø-Ø-1
INDEX & SECTOR	D-CS-M7680-Ø-1
CYLINDER ADDRESS & DIFFERENCE	D-CS-M7681-Ø-1
CONTROL & INTERLOCK	D-CS-M77Ø1-Ø-1
POSITION SERVO PREAMP	D-CS-G938-Ø-1
SERVO POWER AMP CIRCUIT	D-CS-H6Ø4-Ø-1
SERVO POWER AMP	E-UA-H6Ø4-Ø-Ø
CONTROL PANEL CIRCUIT	D-CS-5409698-0-1
CONTROL PANEL	E-IA-5409698-0-0
RELAY BOARD CIRCUIT	D-CS-5409574-0-1
DECPACK MOTOR RELAYS	E-IA-5409574-0-0
CHASSIS WIRING	D-BD-RKØ5-Ø-1
ACCESSORY LIST	A-AL-RKØ5-Ø-17
POWER SUPPLY (H743)	B-DD-H743-Ø
WIRE LIST	K-WL-RKØ5-Ø-3

SEQUENCE MFG. PRINT SET	
MODULE UTILIZATION (PL)	A-PL-RKØ5-Ø-2
RKØ5J TESTER	B-DD-RKØ5J-T
DECPACK ASSY	D-UA-RKØ5J-0-0
DECPACK ASSY (PL)	A-PL-RKØ5J-0-0
WIRED ASSY	D-AD-7008696-0-0
LINEAR POSITIONER ASSY	D-AD-7008702-0-0
LINEAR POSITIONER ASSY (PL)	A-PL-7008702-0-0
H743 POWER SUPPLY	B-DD-H743-Ø
REVISION STATUS	A-WT-7008696-0
SPACER	B-MD-7419064-0-0

UNIT VARIATIONS

VAR	TITLE	PRINT SET RKØ5J-Ø
RKØ5J-AA	DECPACK 115V 60HZ	X
RKØ5J-AB	DECPACK 230V 60HZ	X
RKØ5J-BA	DECPACK 115V 50HZ	X
RKØ5J-BB	DECPACK 230V 50HZ	X
RKØ5J-CA	RKØ5J-AA W.BEZEL FOR H9500	X
	CAB 115V 60HZ	X
RKØ5J-CB	RKØ5J-AB W.BEZEL FOR H9500	
	CAB 230V 60HZ	X
RKØ5J-CC	RKØ5J-BA W.BEZEL FOR H9500	
	CAB 115V 50HZ	X
RKØ5J-CD	RKØ5J-BB W.BEZEL FOR H9500	
	CAB 230V 50HZ	X
RKØ5J-DE	RKØ5J-AA H960 861 PWR CONTROL	
RKØ5J-DF	RKØ5J-AB H960 861	
RKØ5J-DH	RKØ5J-BA H960 861	
RKØ5J-DJ	RKØ5J-BB H960 861	

REVISIONS DATE	CHG. NO.	REV
A.V.	RKØ5-69	AL
DWG WAS RKØ5-0		
A.V.	RKØ5J-3	AM
	RKØ5J-4	AN
	RKØ5J-5	AP
	RKØ5J-6	AR
	RKØ5J-7	AS
	RKØ5J-8	AT
7-77	RKØ5J-9	AU
8-77	RKØ5J-10	AV
12-77	RKØ5J-11	AW
3-78	RKØ5J-12	AY
1-79	RKØ5J-13	AZ

USED ON OPTION/MODEL
RKØ5J

SHEET 1 OF 5

DRN. J. FLEMING	DATE 1/72	TITLE DECPACK ASSY
CHK'D. J. FLEMING	DATE 5/72	
PROJ ENG. A. KARLSBERG	DATE 5/72	
PROD. A. KARLSBERG	DATE 5/72	SIZE B · CODE DD · NUMBER RKØ5J Ø · REV AZ
FIELD SERV. J. WALSH	DATE 5/72	DIST

EN-01062-1A-1-6-R972(325)

DRB 106

This drawing and specifications, herein, are the property of Digital Equipment Corporation and shall not be reproduced or copied or used in whole or in part as the basis for the manufacture or sale of items without written permission.

NOTE:
TERMINATOR OR DISKBUS CABLE CONNECTOR MAY BE INTERCHANGED BETWEEN SLOTS 7 AND 8.

	1	2	3	4	5	6	7	8
	G180	M7680	M768	M7701	G938	M983	M930 *	M929
USAGE	1 2	1 2	1 2	1 2	1 2	1 2	1 2	1 2
USAGE	READ/ WRITE	INDEX & SECTOR	CYLINDER ADDRESS & DIFFERENCE	CONTROL & INTERLOCK	POSITION SERVO PREAMP	CHASSIS CONNECTOR	TERMINATOR	DISKBUS CABLE CONNECTOR

* IF MORE THAN ONE DRIVE IS USED, M930 IS REPLACED BY M929 (BC11A), M930 IS USED IN THE LAST DRIVE ON THE BUS.

REVISIONS				
CHK	CHANGE NO.	REV.		
	RK05-00002	A	N. Trowe 1-12-72	DJENSEN
	RK05-00006 & 6A	B	N. Trowe 2-9-72	JENSEN
	RK05-00023	C	2-11-72	G.SCHNEIDER
	RK05-00040	D	E. ALain 7-7-73	G.SCHNEIDER
	RK05J-00007	E	B. Chiasson 12 Jan. 77	S. RADOFF 1/13/77

FIRST USED ON OPTION/MODEL	QTY.	DESCRIPTION	PART NO.	ITEM NO.
RKØ5		PARTS LIST		

UNLESS OTHERWISE SPECIFIED DIMENSION IN INCHES TOLERANCES
DECIMALS .XXX = .005 .XX = .02 .X = .1
ANGLES ±0° 30'
REMOVE BURRS AND BREAK SHARP CORNERS SURFACE QUALITY ✓

MATERIAL —
FINISH —

DRN.		DATE 11-7-71
CHK'D.		DATE 11-9-71
ENG.		DATE 24 Nov 71
PROJ. ENG.		DATE 11-24-71
PROD.		DATE 11/1/71

digital EQUIPMENT CORPORATION MAYNARD, MASSACHUSETTS

TITLE MODULE UTILIZATION

NEXT HIGHER ASSY. B-DD-RKØ5-Ø
SCALE NONE
SHEET OF

SIZE	CODE	NUMBER	REV.
C	MU	RKØ5-Ø-2	E

DIST.

DEC FORM NO. DRC 100-A

THE DRAWING AND SPECIFICATIONS, HEREIN, ARE THE PROPERTY OF DIGITAL EQUIPMENT CORPORATION AND SHALL NOT BE REPRODUCED OR COPIED OR USED IN WHOLE OR IN PART AS THE BASIS FOR THE MANUFACTURE OR SALE OF ITEMS WITHOUT WRITTEN PERMISSION. COPYRIGHT © 1974 DIGITAL EQUIPMENT CORPORATION.

NOTES:

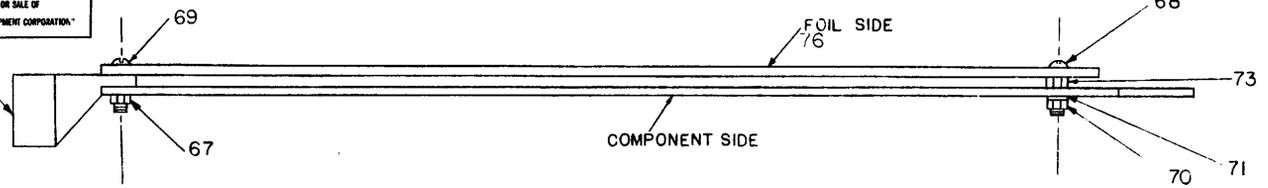

NOTE:
DO NOT INSERT → HANDLE HOLE EYELETS ON OUTSIDE HANDLE HOLES: (2 PLCS)

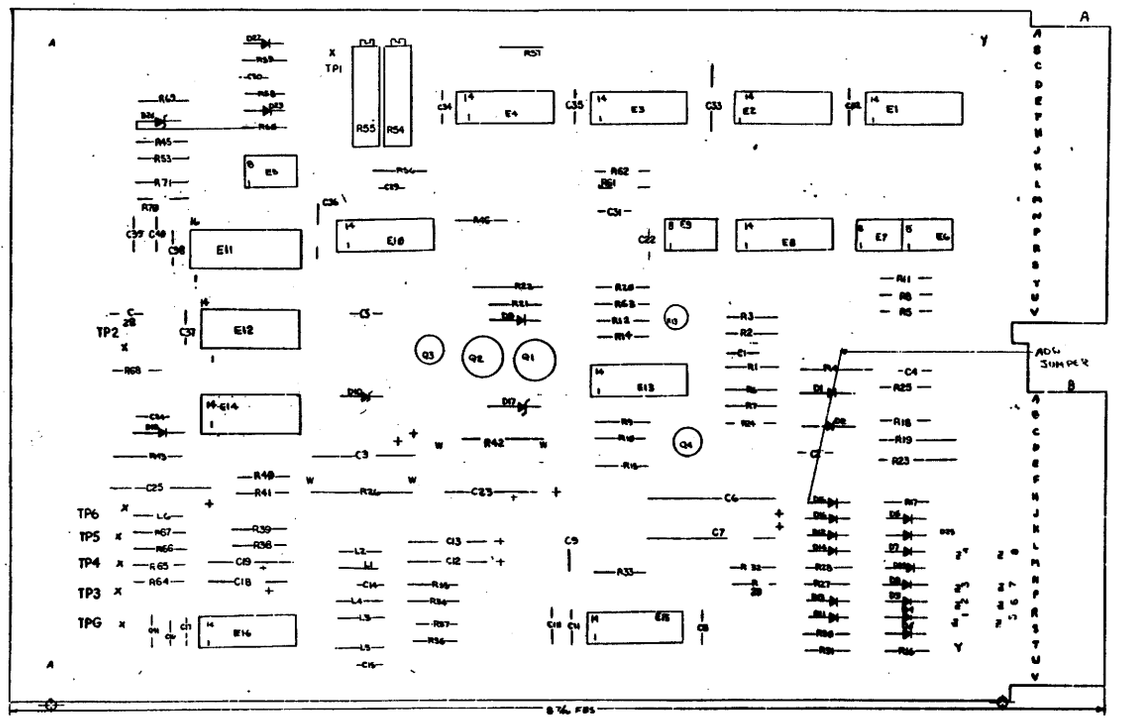

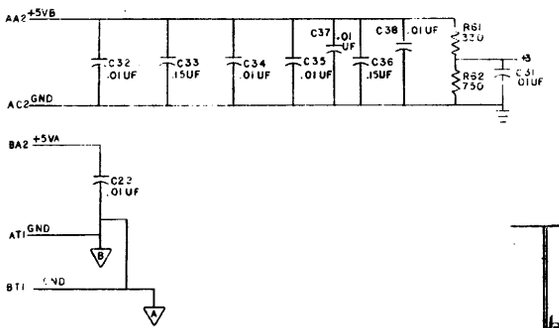

DEC 8640	1	8	
DEC 75452	4	8	
IC TYPE	GND	+5V	

GND AND 5V ARE USUALLY PIN 7 AND 14 RESPECTIVELY EXCEPTIONS ARE STATED ABOVE

IC PIN LOCATIONS

QTY	REF. DESIGNATION	DESCRIPTION	PART NO.	ITEM NO.
3	E6,E7,E9	I.C. DEC 75452	1910645	66
2	E15,16	I.C. DEC 733	1910644	65
1	E14	I.C. DEC 1414	1[illegible]837	64
1	E5	I.C. DEC 741	1[illegible]	63
1	E1	I.C. DEC 8881	1909705	62
2	E2,E8	I.C. DEC 8640	1[illegible]469	61
1	E10	I.C. DEC 9601	1909373	60
1	E13	I.C. DEC 7472	1905588	59
2	E4,E12	I.C. DEC 7400	1905575	58
1	E3	I.C. DEC 7474	1905547	57
1	L6	INDUCTOR 120UH	1610663	56
2	L1,L2	INDUCTOR 56UH	1610661	55
3	L3,L4,L5	INDUCTOR 100UH	1610662	54
1	Q3	TRANSISTOR DEC 6534C	1503409-02	53
1	Q4	TRANSISTOR DEC 3009B	1503100	52
2	Q1,Q2	TRANSISTOR 2N2904	1501742	51
				50
1	R13	POT 1K 1/2W 20% 62PR	1309150-03	49
2	R54,55	POT 10K 3/4W 10% 76PR	1309143-10	48
2	R16,R17	RES. 27K 1/4W 5%	1305346	47
2	R27,R28	RES. 8.2K 1/4W 5%	1303179	46
1	R60	RES 220K 1/4W 5%	1302092	45
1	R4	RES. 270 1/2W 5%	1300285	44
2	R40,R41	RES. 560 1/4W 5%	1301490	43
8	R6,9,45,53,70,71	RES 5.6K 1/4W 5%	1301874	42
1	R11	RES. 1.1K 1/4W 5%	1301475	41
1	R58	RES. 3.3K 1/4W 5%	1300439	40
1	R62	RES. 750 1/4W 5%	1301401	39
2	R15,R21	RES. 1.2K 1/4W 5%	1301320	38
2	R30,R31	RES. 15K 1/4W 5%	1300496	37
8	R5,8,18,38,39,57	RES. 10K 1/4W 5%	1300479	36
1	R59	RES. 4.7K 1/4W 5%	1300447	35
1	E11	I.C. DEC. 74123	1910436	34
16	R1,R2,R3 R20,R34-37 R46 R56,R63-68	RES. 1K 1/4W 5%	1300365	33
2	R24,R12	RES. 470 1/4W 5%	1300318	31
1	R43	RES 470 1/2W 5%	1300315	30
3	R22,R25,R61	RES. 330 1/4W 5%	1300295	29
2	R29,R32	RES. 220 1/4 5%	1300271	28
2	R26,R42	RES. 180 1W 5%	1300262	27
1	R19	RES. 180 1/2W 5%	1300260	26
1	R14	RES. 150 1/4W 5%	1300250	25
1	R23	RES. 150 1/2W 5%	1300249	24
1	R33	RES. 100 1/4W 5%	1300229	23
8	1-8	GOLD W/HEWPAR PINS	9009217	22
18	D1,D3-9,D11-16,D22-25	DIODE D672	1105275	21
1	D2	DIODE IN 751A(5.1V ZENER)	1110594	20
				19
3	D10,D17,D18	DIODE IN 753A (6.2V ZENER)	1102421	18
13	C9,C33,C36	CAP .15UF 50V 10% POL CARBO	1010031	17
~~1~~	~~C15~~	~~CAP. 18PF 100V 5% D.M.~~	~~1000005~~	~~16~~
4	C12,C13,C16,C19	CAP. .01 UF 50V AXIAL	1001610-00	15
14	C4,10,11,16,17,22,24,29,31 32,34,35,37,38	CAP. .01UF 100V 20% DISC	1001610-01	14
2	C6,C7	CAP 10UF 35V 20% S. TANT	1000069	13
3	C3,C23,C25	CAP 6.8UF 35V 20% S. TANT	1000067	12
1	C2	CAP 680PF 100V 5% D.M.	1000054	11
2	C5,C30	CAP 470PF 100V 5% D.M.	1000024	10
1	C29	CAP 150PF 100V 5% D.M.	1000019	9
1	C41	CAP 27PF 100V 5% D.M.	1001739	8
1	C14	CAP 56PF 100V 5% D.M.	1000012	7
3	C1,C39,C40	CAP 47PF 100V 5% D.M.	1000011	6
2	C8,C15	CAP 18 PF 100V 5% D.M.	1002608	5
		ETCHED CIRCUIT BOARD	9009743	4
		MODULE ECO HISTORY	B-MH-G180-0-6	3
		ASSY. DRILLING HOLE LAYOUT	E-AH-G180-0-5	2
		X-Y COORDINATE HOLE LOCATION	X-CO-G180-0-4	1

ETCH BOARD REV. L

A/R				
		WIRE #30 AWG GREEN	9105740-55	80
1	D26	DIODE IN746A (3.9V ZENER)	1100122	79
1	R69	RES. 180 1/4W 5%	1301322	78
2	R7,R10	RES. 100 1/4W 5%	1300229	77
1		NOISE SHIELD	5009893	76
2		HANDLE,FLIP CHIP-GREEN	9008337-01	75
7	TPG,TP1 THRU TP6	SWAGE LUG	9007791	74
2		HEX NUT,NYLON #2-56	9007263	73
2		EYELET #684-7	9006732	72
2		INTERNAL LOCK WASHER #2-56	9006631	71
2		HEX NUT #2-56	9006555	70
2		SCREW 4/40X3/8	9006011-4	69
2		SCREW PAN HD #2-56X5/16	9006002-1	68
2		KEP NUT 4/40	9006557	67

PARTS LIST

DEC NO.	EIA NO.	DEC NO.	EIA NO.
		IN746A	SAME
2N2904	2N2118A	IN753A	SAME
DEC 3009B	2N3009	IN751A	SAME
DEC 6534C	MPS6534	D672	IN3653

SEMICONDUCTOR CONVERSION CHART

REV.	CHANGE NO.	REVISIONS
R	G180-00012	
P	G180-00011	
N	G180-00009	
K	G180-00006	

DRN. R. DOUCETTE DATE 10-25-71
CHK'D. NANCY MOORE DATE 11-30-71
ENG. DALE JENSEN DATE 1-25-72
PROJ. ENG. D. KNOLSBERG DATE 1-25-72
PROD. DATE
NEXT HIGHER ASSY
SCALE
SHEET 1 OF 2

digital

TITLE DEC PACK READ/WRITE

SIZE D CODE CO NUMBER G180-0-1 REV. R

DIST.

ATIC IS FURNISHED ONLY FOR TEST AND MAINTENANCE PURPOSES. THE
E PROPRIETARY IN NATURE AND SHOULD BE TREATED ACCORDINGLY
971 BY DIGITAL EQUIPMENT CORPORATION

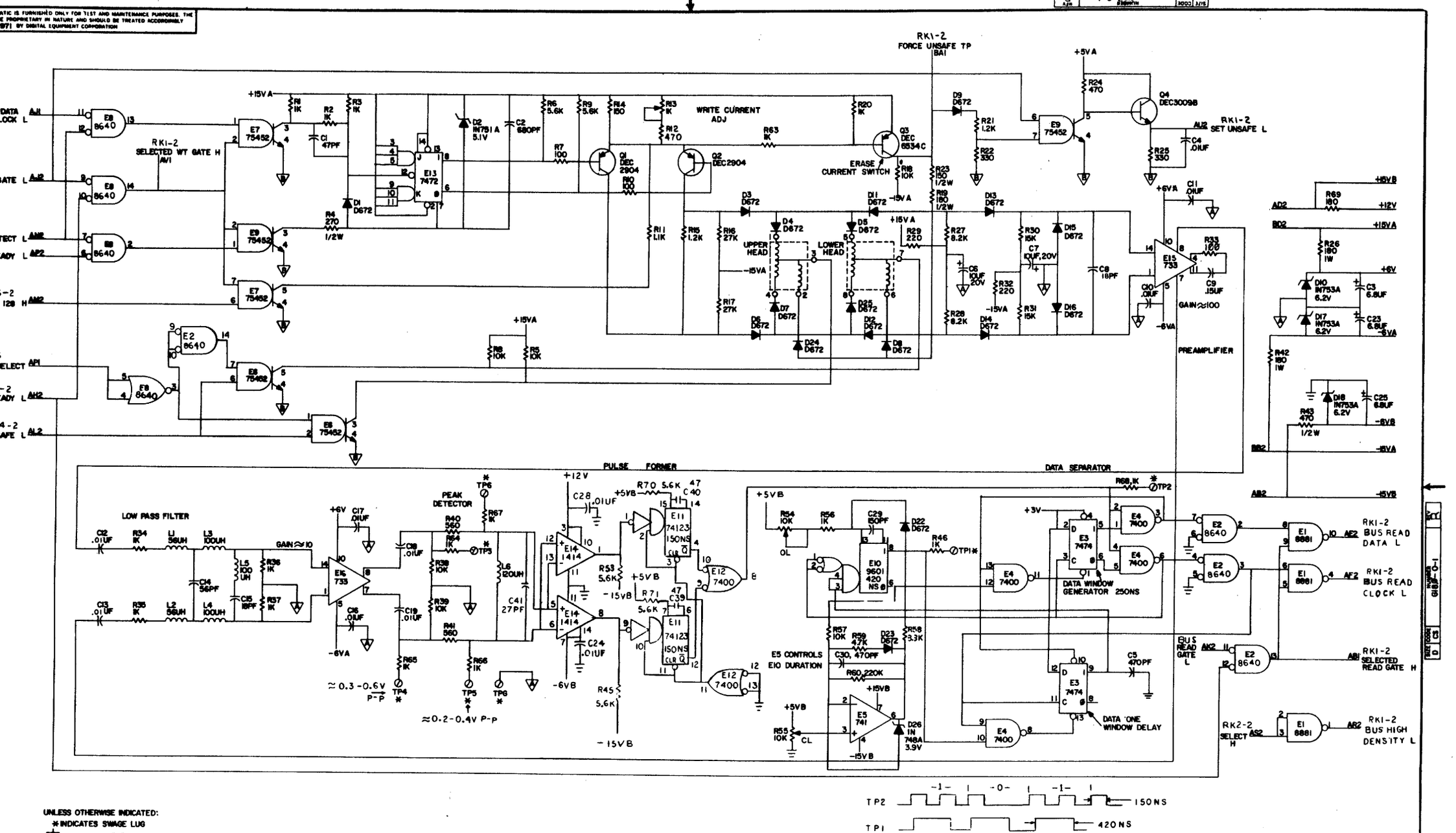

UNLESS OTHERWISE INDICATED:
* INDICATES SWAGE LUG
▽ = ANALOG GND "A" BT1
▽ = ANALOG GND "B" AT1
⏚ = DIGITAL GND AC2
----- = COMPONENTS NOT MOUNTED ON BOARD
ALL TIMES INDICATED ARE NOMINAL

SLOT-1

TRANSISTOR & DIODE CONVERSION CHART

DEC	EIA	DEC	EIA
DEC 8534C	MPS8534	D672	SAME
DEC 3009B	2N3009	D673A	SAME
2N2904	2N2904	D673B	SAME
		D673C	SAME
		1N753A	SAME

digital EQUIPMENT CORPORATION MAYNARD, MASSACHUSETTS

TITLE DEC PACK READ/WRITE RK1-2

SIZE D CODE CS NUMBER G186-0-1 REV R

PRINTED CIRCUIT REV.

SHEET 2 OF 2

THE DRAWING AND SPECIFICATIONS, HEREIN, ARE THE PROPERTY OF DIGITAL EQUIPMENT CORPORATION AND SHALL NOT BE REPRODUCED OR COPIED OR USED IN WHOLE OR PART AS THE BASIS FOR THE MANUFACTURE OR SALE OF ITEMS WITHOUT WRITTEN PERMISSION. COPYRIGHT © 1976, DIGITAL EQUIPMENT CORPORATION

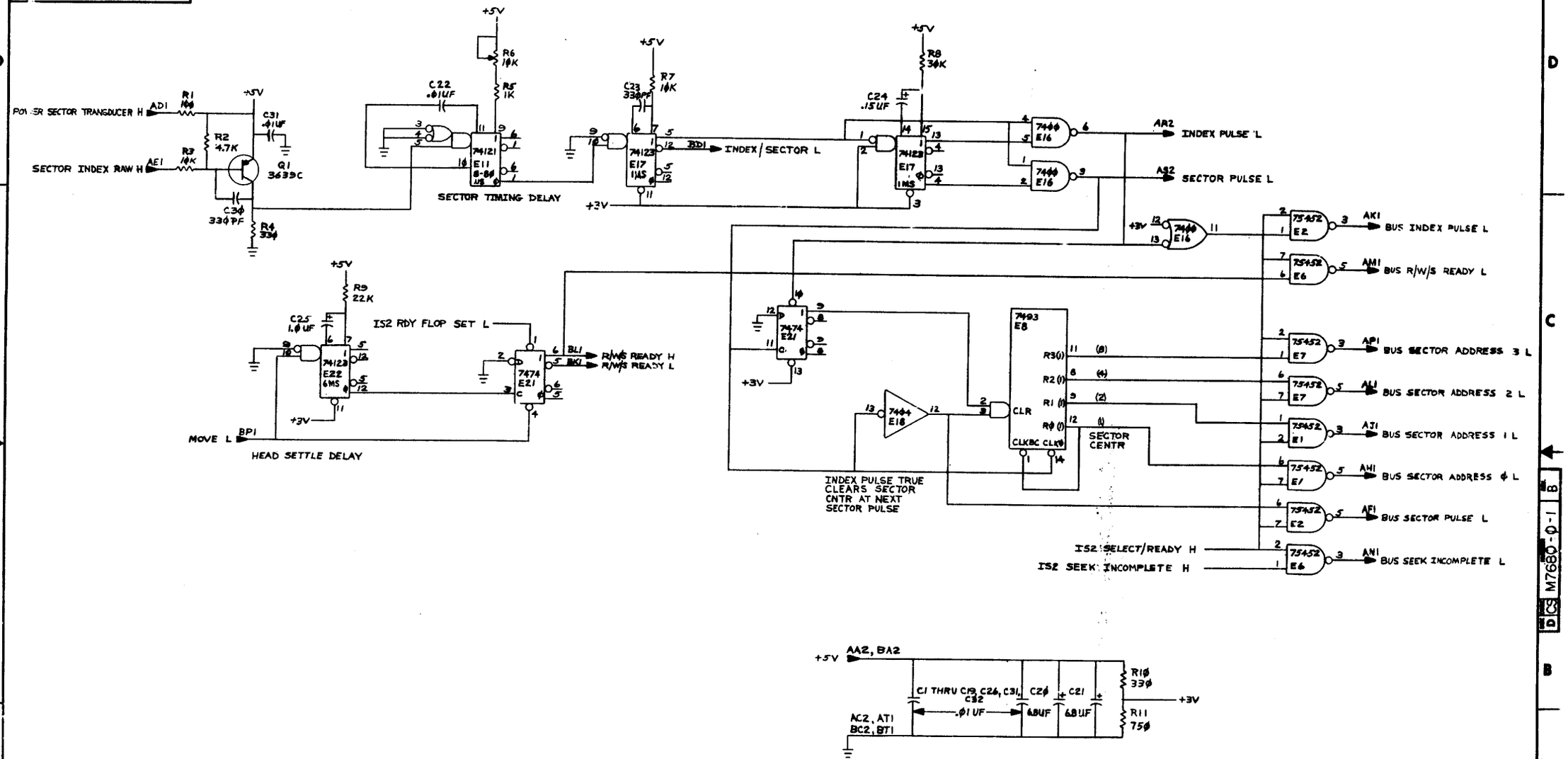

DWN.			FIRST USED ON
CHK'D			
ENG.			TITLE DEC PACK INDEX AND SECTOR (IS1)
PROJ. ENG.			
PROD.			
NEXT HIGHER ASSY.	D-UA-M768Ø-Ø-B		
SCALE			SIZE D · CODE CS · NUMBER M768Ø-Ø-1 · REV. B
SHEET	1 OF 2		DIST.

REVISIONS		
	M768Ø-0001	B

THIS DRAWING AND SPECIFICATIONS, HEREIN, ARE THE PROPERTY OF DIGITAL EQUIPMENT CORPORATION AND SHALL NOT BE REPRODUCED OR COPIED OR USED IN WHOLE OR IN PART AS THE BASIS FOR THE MANUFACTURE OR SALE OF ITEMS WITHOUT WRITTEN PERMISSION. COPYRIGHT © 1976, DIGITAL EQUIPMENT CORPORATION

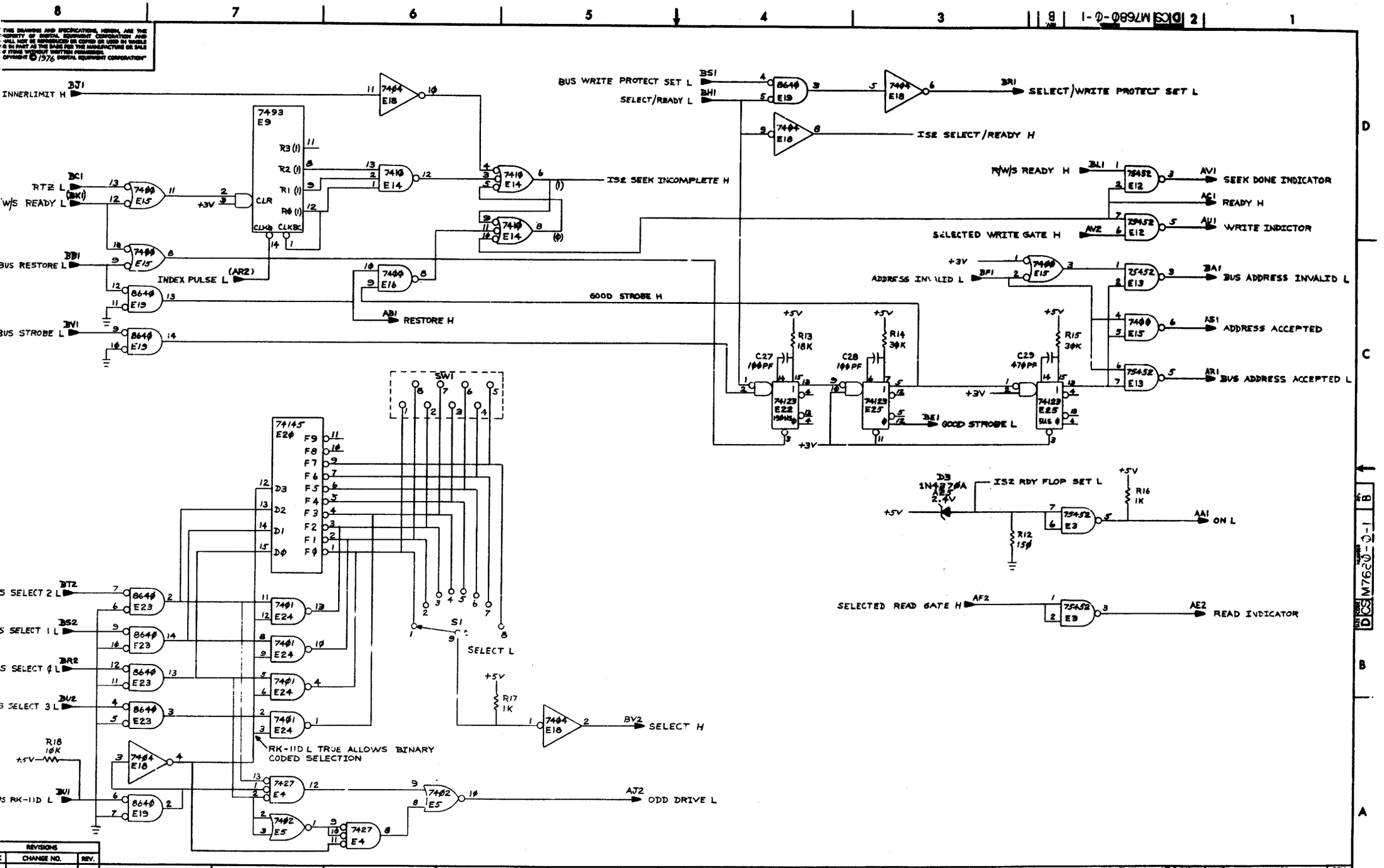

REVISIONS		
	CHANGE NO.	REV.

TITLE	SIZE	CODE	NUMBER	REV.
DEC PACK INDEX (IS2) AND SECTOR	D	CS	M7680-Ø-1	B

SCALE — / / SHEET 2 OF 2 DIST.

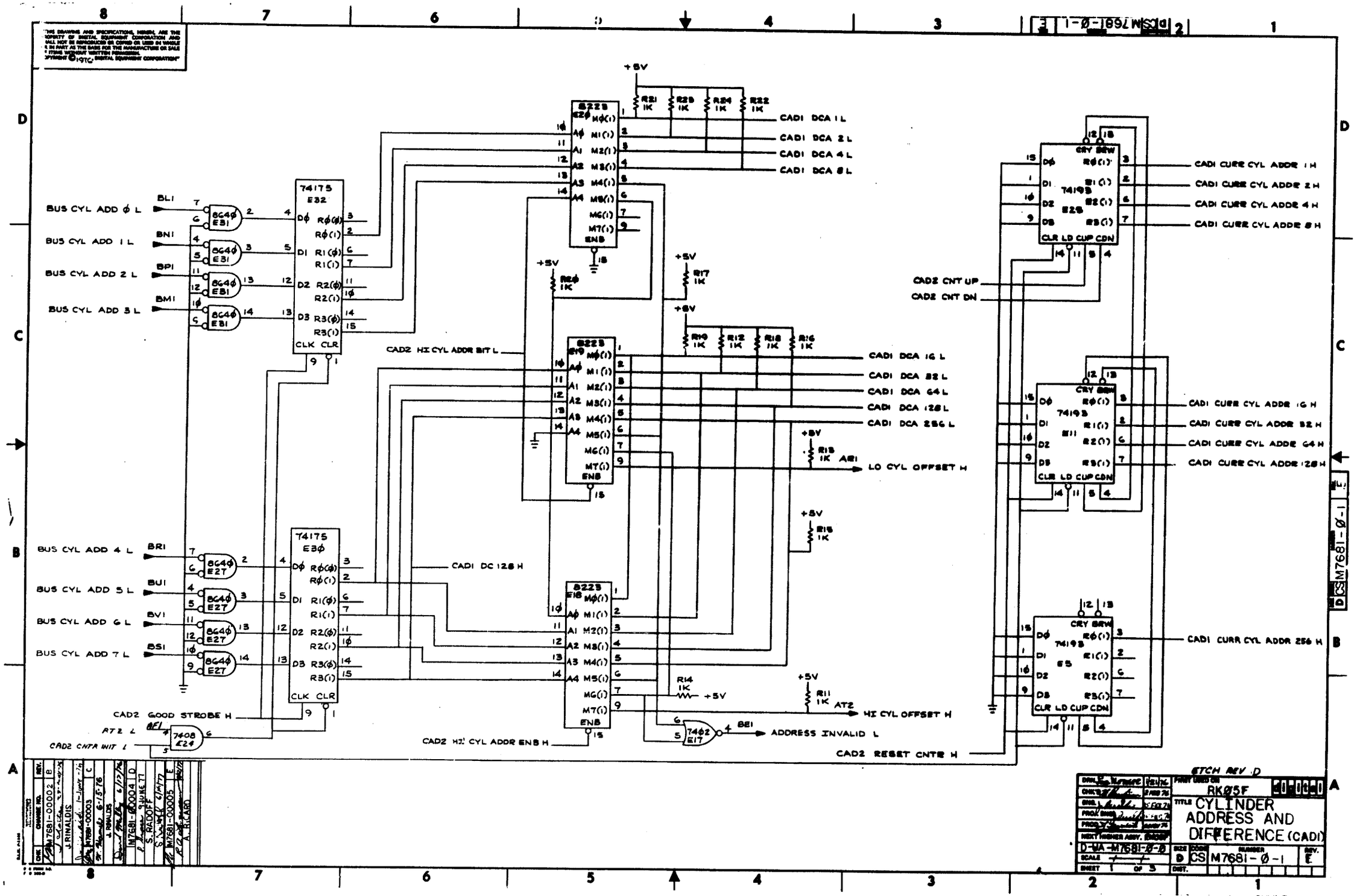
BUS CYL ADD Ø L
BUS CYL ADD 1 L
BUS CYL ADD 2 L
BUS CYL ADD 3 L
BUS CYL ADD 4 L
BUS CYL ADD 5 L
BUS CYL ADD 6 L
BUS CYL ADD 7 L
74175 E32
74175 E3Ø
8223 E2Ø
8223 E19
8223 E18
74193 E26
74193 E11
74193 E5
CADI DCA 1 L
CADI DCA 2 L
CADI DCA 4 L
CADI DCA 8 L
CADI DCA 16 L
CADI DCA 32 L
CADI DCA 64 L
CADI DCA 128 L
CADI DCA 256 L
CADI CURR CYL ADDR 1 H
CADI CURR CYL ADDR 2 H
CADI CURR CYL ADDR 4 H
CADI CURR CYL ADDR 8 H
CADI CURR CYL ADDR 16 H
CADI CURR CYL ADDR 32 H
CADI CURR CYL ADDR 64 H
CADI CURR CYL ADDR 128 H
CADI CURR CYL ADDR 256 H
CAD2 CNT UP
CAD2 CNT DN
CAD2 HI CYL ADDR BIT L
CADI DC 128 H
LO CYL OFFSET H
HI CYL OFFSET H
ADDRESS INVALID L
CAD2 RESET CNTR H
CAD2 GOOD STROBE H
CAD2 CNTR INIT L
CAD2 HI CYL ADDR ENB H
+5V
D-UA-M7681-Ø-Ø
CYLINDER ADDRESS AND DIFFERENCE (CADI)
RKØ5F
M7681-Ø-1
SHEET 1 OF 5

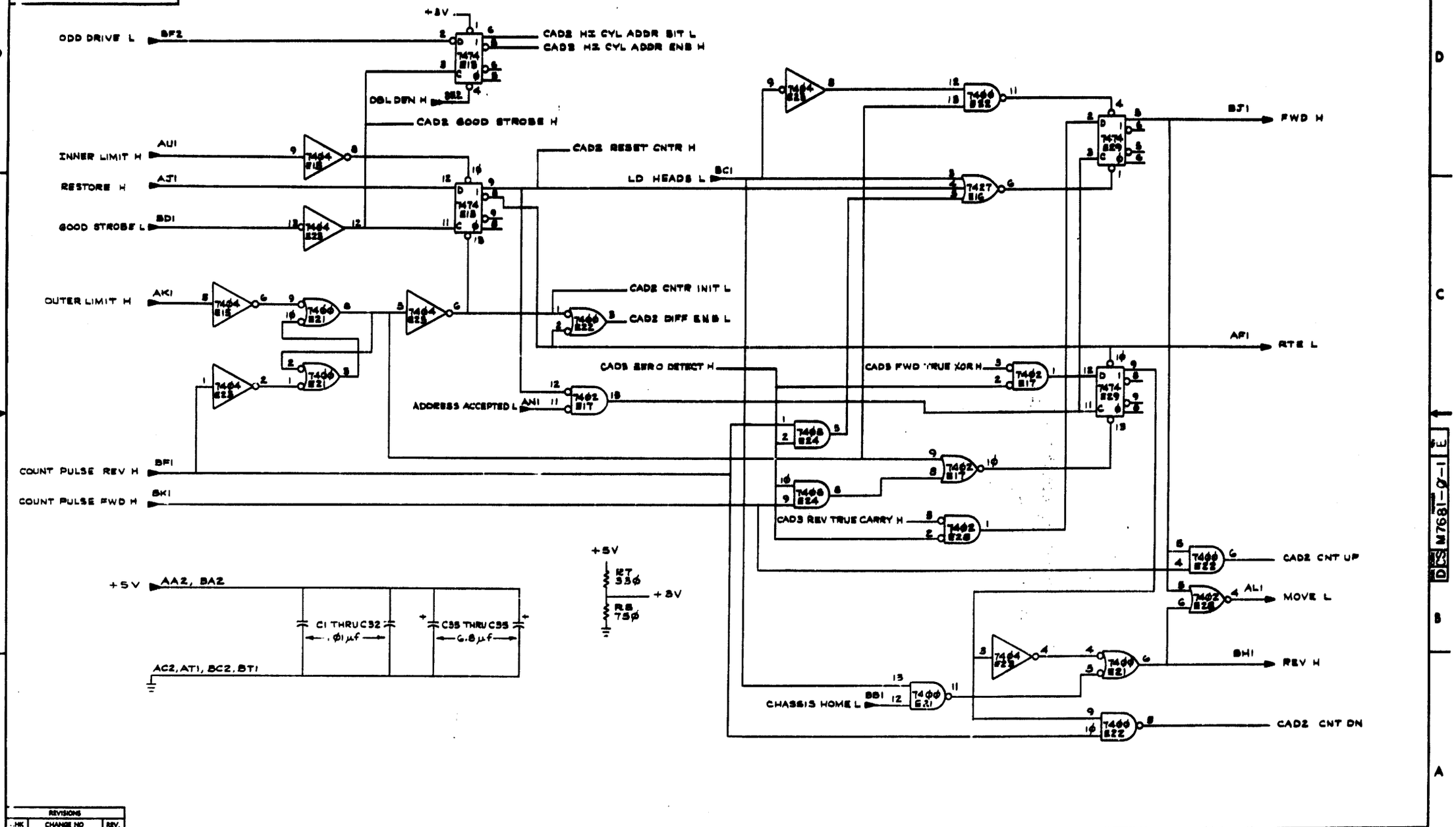

REVISIONS		
HK	CHANGE NO	REV.

TITLE CYLINDER ADDRESS AND DIFFERENCE (CAD2)

SIZE D CS NUMBER M7681-0-1 REV. E

SCALE — SHEET 2 OF 3 DWG.

DCS M7681-0-1 E

"THIS DRAWING AND SPECIFICATIONS, HEREIN, ARE THE PROPERTY OF DIGITAL EQUIPMENT CORPORATION AND SHALL NOT BE REPRODUCED OR COPIED OR USED IN WHOLE OR IN PART AS THE BASIS FOR THE MANUFACTURE OR SALE OF ITEMS WITHOUT WRITTEN PERMISSION. COPYRIGHT © 1970 DIGITAL EQUIPMENT CORPORATION"

NOTE:
1. FOR RK05J I.C. LOCATION E1 IS USED
FOR RK05F I.C. LOCATION E2 IS USED
2. FOR RK05J S1 IS IN THE ON POSITION
FOR RK05F S1 IS IN THE OFF POSITION

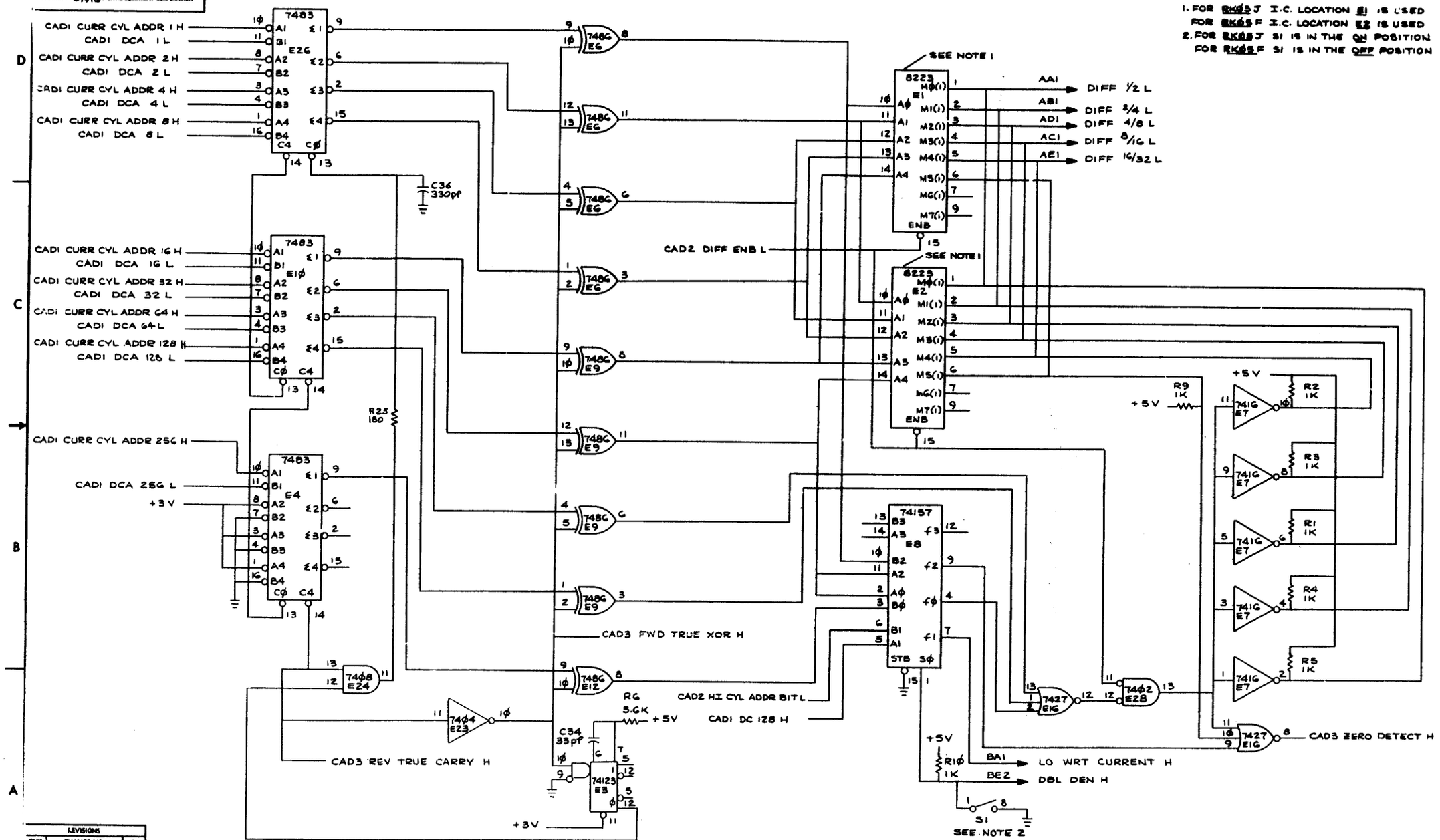

REVISIONS		
CHK	CHANGE NO.	REV.

TITLE	SIZE	CODE	NUMBER	REV.
CYLINDER ADDRESS AND DIFFERENCE (CAD3)	D	CS	M7681-0-1	E
SCALE —	SHEET 3 OF 5	DIST.		

DEC FORM NO. DRD 150

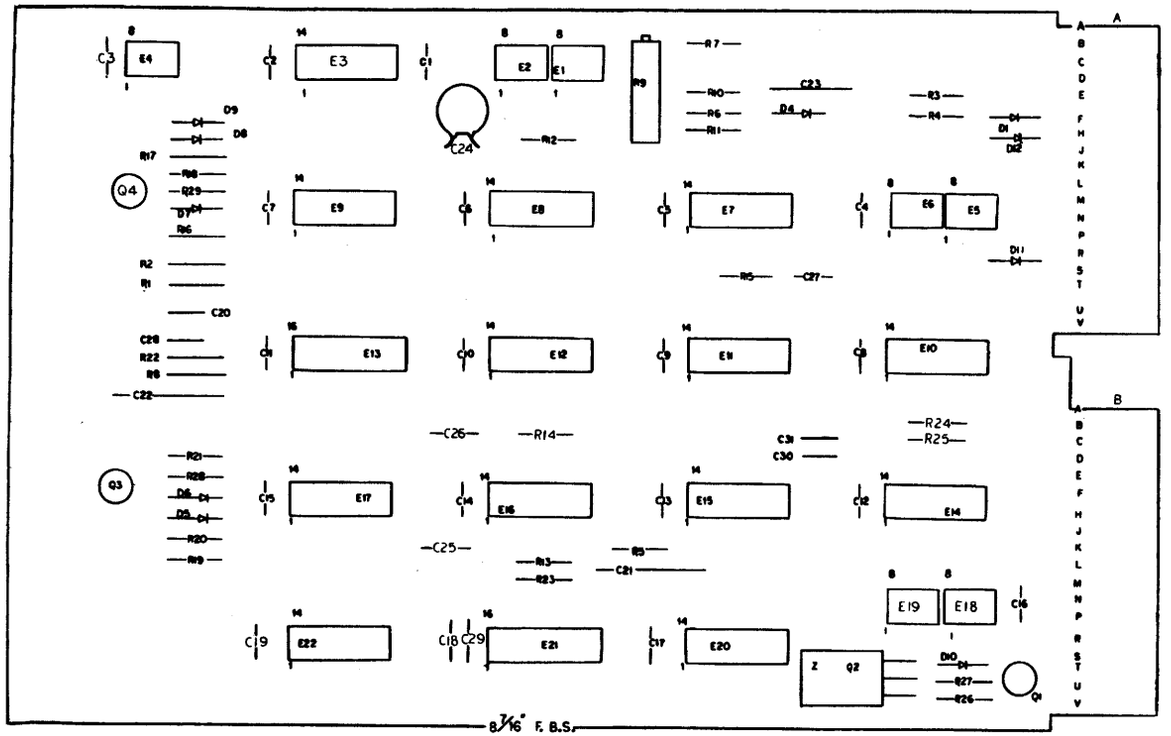

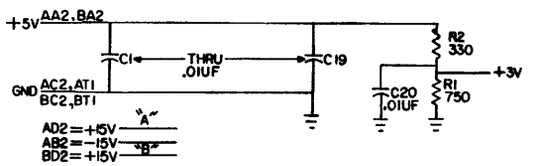

QTY	REF DESIGNATION	DESCRIPTION	PART NO.	ITEM NO.
		PARTS LIST		

SEMICONDUCTOR CONVERSION CHART			
ETCH BOARD REV	K		
IN748 3.9V	SAME	DEC6534D	MPS6534
IN746A 3.3V	SAME	DEC44C3	
IN4001	SAME	IN759 S	SAME
D670	IN3653		
D664	IN3606		
DEC6531	MPS6531		
DEC2219	2N2219		
DEC NO.	EIA NO.	DEC NO.	EIA NO.

REVISIONS			
REV	CHANGE NO.	CHK	
D	M7701-00004A	F.W.A.	1-20-72
F	M7701-00002		8-25-72
F	M7701-00003		9-21-72
H	M7701-00004		5-17-72
J	M7701-00005		May 4-72
K	M7701-00006		7-26-72
L	M7701-00007		10-5-72
M	M7701-00008		11-20-72
N	M7701-00009		11/29/72
P	M7701-00011		4-3-73

DRAWN Roger V. Doucette DATE 10-29-71
CHECKED Nancy Moore DATE 11-3-71
ENG. DATE 12-7-71
PROJ. ENG. DATE 12-9-71
PROD. DATE 1/21/72
NEXT HIGHER ASSY
SCALE
SHEET 1 OF 3

digital EQUIPMENT CORPORATION MAYNARD MASSACHUSETTS

TITLE DISK ENG. CONTROL + INTERLOCK

SIZE D CODE CS NUMBER M7701-0-1 REV. P

DIST.

SUF FORM D CS M7701-0-1 P

"THIS DRAWING AND SPECIFICATIONS, HEREIN, ARE THE PROPERTY OF DIGITAL EQUIPMENT CORPORATION AND SHALL NOT BE REPRODUCED OR COPIED OR USED IN WHOLE OR IN PART AS THE BASIS FOR THE MANUFACTURE OR SALE OF ITEMS WITHOUT WRITTEN PERMISSION. COPYRIGHT ©1978 DIGITAL EQUIPMENT CORPORATION"

QTY	REF DESIGNATION	DESCRIPTION	PART NO.	ITEM NO
		X-Y COORDINATE HOLE LOCATION	K-CO-M7701-0-4	1
		ASSY/DRILLING HOLE LAYOUT	E-AH-M7701-0-5	2
		MODULE ECO HISTORY	B-MH-M7701-0-6	3
1		ETCHED CIRCUIT BOARD	5009714	4
25	C1-C20, C25-C27, C30, C31	CAP, .01 UF, 100V, 20%, DISC	1001610	5
1	C21	CAP, .15 UF, 20V, 20%, TANT	1004812	6
1	C22	CAP, .10 UF, 20V, 20%, TANT	1004513	7
1	C23	CAP, .15 UF, 35V, 20%, TANT	1002180	8
2	C28, C29	CAP, 470 PF, 100V, 5%, DM	1000024	9
1	D8	DIODE, D664	1100114	10
2	D1, D11	DIODE, D670	1102162	11
2	D9, D10	DIODE, IN4001	1102942	12
1	D6	DIODE, IN746A, 3.3V	1104860	13
1	D4	DIODE, IN748, 3.9V	1100121	14
2	D5, D7	DIODE, IN759S, 12V	1110643	15
A/R		GRIPLETS	1210244-0	16
1	R27	RES, 100 OHMS, ¼W, 5%	1300229	17
2	R2, R3	RES, 330 OHMS, ¼W, 5%	1300295	18
2	R18, R19	RES, 470 OHMS, ¼W, 5%	1300316	19
1	R1	RES, 750 OHMS, ¼W, 5%	1301401	20
9	R12, R13, R15, R20, R24, R25, R26, R28, R14	RES., 1K, ¼W, 5%	1300365	21
1	R28	RES, 1.5K, ¼W, 5%	1300391	22
1	R4	RES, 680 OHMS, ¼W, 5%	1301424	23
2	R11, R21	RES, 47K, ¼W, 5%	1300447	24
1	R16	RES, 5.6K, ¼W, 5%	1301074	25
5	R5, R8, R17, R22, R23	RES, 10K, ¼W, 5%	1300479	26
				27
				28
2	R7, R10	RES, 1M, ¼W, 5%	1309595	29
1	R6	RES, 10 M, ¼W, 5%	1302668	30
1	R9	RES, 10 K, ¾W, 10%, 76 PR	1309143-10	31
1	Q4	TRANSISTOR, DEC 8531	1509338	32
1	Q1	TRANSISTOR, DEC 2219	1501881	33
1	Q3	TRANSISTOR, DEC 8534D	1503409-00	34
1	Q2	TRANSISTOR, DEC 44C3	151671	35
4	E3, E7, E16, E14	I.C., DEC 7400	1905575	36
1	E20	I.C., DEC 7402	1909004	37
2	E11, E8	I.C., DEC 7404	1909686	38
2	E12, E10	I.C., DEC 7410	1905576	39
2	E9, E15	I.C., DEC 7474	1905547	40
2	E22, E17	I.C., DEC 7493	1909054	41
2	E21, E13	I.C., DEC 74123	1910436	42
6	E2, E4, E6, E5, E18, E19	I.C., DEC 75451	1910206	43
1	E1	I.C., DEC 301	1910262	44
4		EYELET #GSL-7	9006732	45
2		HANDLE FLIP CHIP - MAGENTA	9006337-08	46
1		SCREW #4-40 X 5/16	9006010-1	47
1		NUT, KEP #4-40	9006557	48
1	D12	DIODE, IN5248B, 18V, 5%	1110766	49
1	C24	CAP, .047 UF, 16V, DISC	1009678	50

REVISIONS		
CHK	CHANGE NO.	REV.

TITLE DISK ENG. CONTROL +INTERLOCK

SCALE — SHEET 2 OF 3

SIZE D CODE CS NUMBER M7701-0-1 REV. P

DIST.

D CS M7701-0-1 P

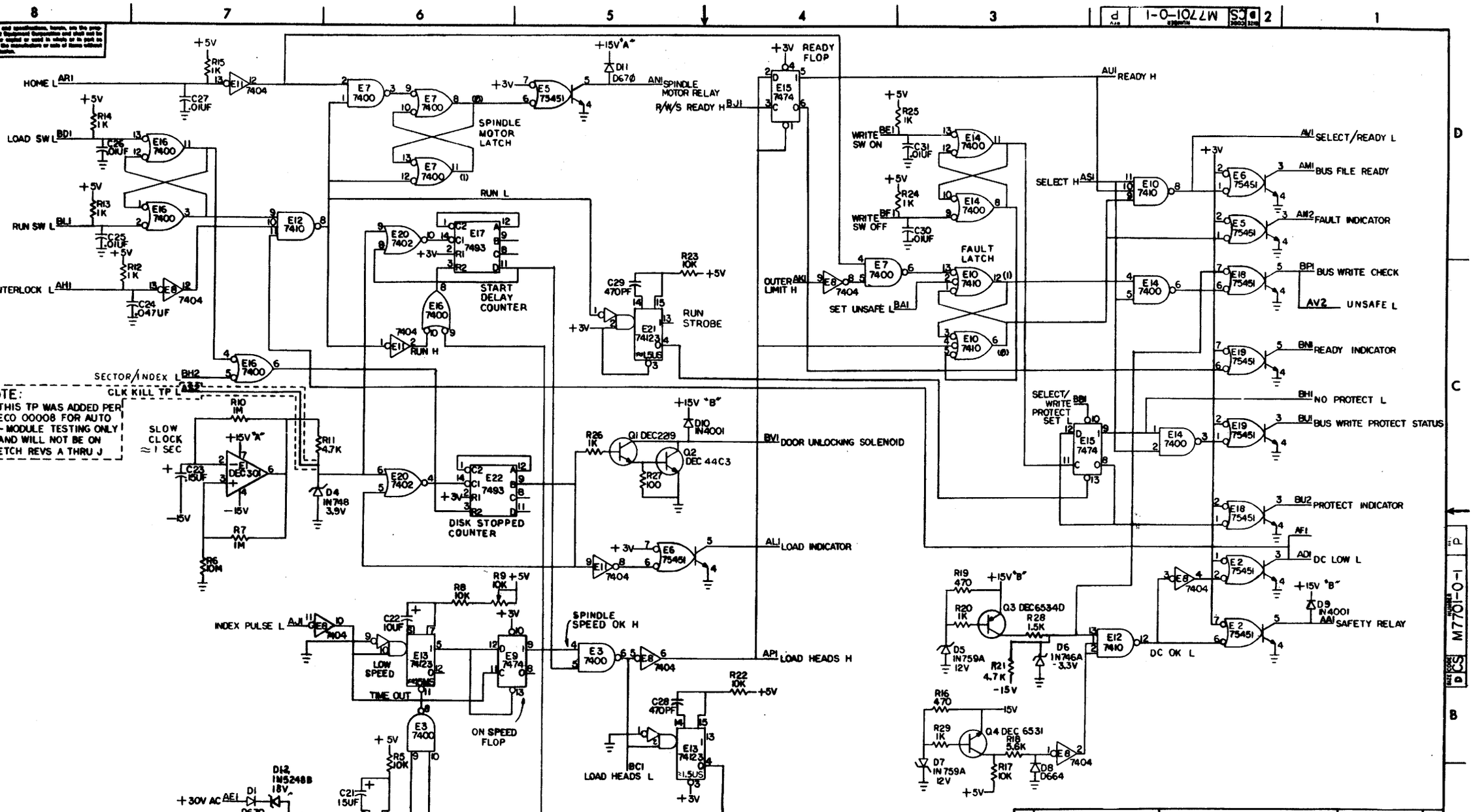
HOME L AR1
LOAD SW L BD1
RUN SW L BL1
INTERLOCK L AH1
SECTOR/INDEX L BH2
CLK KILL TP L
SPINDLE MOTOR LATCH
SPINDLE MOTOR RELAY
R/W/S READY H BJ1
READY FLOP
READY H AU1
WRITE SW ON BE1
WRITE SW OFF BF1
SELECT H AS1
FAULT LATCH
OUTER LIMIT H AK1
SET UNSAFE L BA1
SELECT/READY L AV1
BUS FILE READY AM1
FAULT INDICATOR AM2
BUS WRITE CHECK BP1
UNSAFE L AV2
READY INDICATOR BN1
NO PROTECT L BH1
BUS WRITE PROTECT STATUS BU1
PROTECT INDICATOR BU2
DC LOW L AF1
SAFETY RELAY AA1
DC OK L
RUN L
START DELAY COUNTER
RUN H
RUN STROBE
DISK STOPPED COUNTER
SLOW CLOCK ≈ 1 SEC
DOOR UNLOCKING SOLENOID BV1
LOAD INDICATOR AL1
INDEX PULSE L AJ1
LOW SPEED
TIME OUT
ON SPEED FLOP
SPINDLE SPEED OK H
LOAD HEADS H AP1
LOAD HEADS L BC1
+30V AC AE1
AC LOW DETECT
AC LOW L AR2
SECTOR L BK1
NOTE: THIS TP WAS ADDED PER ECO 00008 FOR AUTO - MODULE TESTING ONLY AND WILL NOT BE ON ETCH REVS A THRU J
UNLESS OTHERWISE INDICATED:
PIN7 = GND
PIN14 = +5V ON ALL IC'S EXCEPT
DEC 7493 PIN5 = +5V, PIN10 = GND
DEC 74123 PIN16 = +5V, PIN8 = GND
DEC75451 PIN8 = +5V, PIN4 = GND
PARTS LIST
QTY
REF DESIGNATION
DESCRIPTION
PART NO.
ITEM NO.
ETCH BOARD REV
SEMICONDUCTOR CONVERSION CHART
DEC NO.
EIA NO.
digital EQUIPMENT CORPORATION
MAYNARD, MASSACHUSETTS
RK05 CONTROL + INTERLOCK
M7701-0-1
REV. P
SHEET 3 OF 3

"THIS DRAWING AND SPECIFICATIONS, HEREIN, ARE THE PROPERTY OF DIGITAL EQUIPMENT CORPORATION AND SHALL NOT BE REPRODUCED OR COPIED OR USED IN WHOLE OR IN PART AS THE BASIS FOR THE MANUFACTURE OR SALE OF ITEMS WITHOUT WRITTEN PERMISSION.
COPYRIGHT © 1976 DIGITAL EQUIPMENT CORPORATION"

NOTES:

8	8	Q1 THRU Q4, Q11 THRU Q14	TRANSISTOR 2N5245	1509681	49	REF	REF		X-Y COORDINATE HOLE LOCATION	K-CO-G938-0-4	1
6	6	Q5 THRU Q10	TRANSISTOR DEC G534D	1503409-00	50	REF	REF		ASSY/DRILLING HOLE LAYOUT	E-AH-G938-0-5	2
1	1	E1	I.C. DEC 7404	1909686	51	REF	REF		MODULE ECO HISTORY	B-MH-G938-0-6	3
1	1	E2	I.C. DEC 7413	1909989	52	1	1		ETCHED CIRCUIT BOARD	5009388	4
2	2	E3, E4	I.C. DEC 301	1910282	53	4	4	C2, C3, C4, C5	CAP. .015 UF 50V 2% POLY CARB	1010646	5
1	1	E5	I.C. DEC 7400	1905575	54	1	1	C6	CAP. 8200 PF 100V MICA	1000061	6
7	7	E7, E8, E11 THRU E15	I.C. DEC 72741	1910298-00	55	1	1	C7	CAP. .022 UF 100V 10% MYLAR	1002323	7
4	4		EYELET #G54-7	9006732	56	3	3	C8, C10, C14	CAP. 15 UF 20V 10% S. TANT	1004812	8
2	2		HANDLE, FLIP CHIP GREEN	9008377-01	57	11	11	C9, C11, C12, C13, C15 THRU C23	CAP. .01 UF 100V 20% DISC.	1001610-01	9
A/R	A/R		GRIPLET	1210244-0	58	7	7	D1 THRU D4, D23 THRU D25	DIODE D662	1100113	10
1	—	R22	RES 200K, 1/8W, 1%	1305336	59	10	10	D5 THRU D14	DIODE D664	1100114	11
1	—	R23	RES 137K, 1/8W, 1%	1305442	60	2	2	D15, D16	DIODE IN758A 10V	1100125	12
2	—	R13, R19	RES 9.09K, 1/8W, 1%	1304855	61	4	4	D19 THRU D22	DIODE IN746A	1104860	13
1	—	R74	RES 2.94K, 1/8W, 1%	1301981	62	7	7	R1, R15, R17, R46, R49, R52, R55	RES. 15K 1/4 W 5%	1300496	14
3	3	E6, E9, E10	IC DEC 72741	1910298-01	63	1	1	R2	RES. 13.3K 1/4W 1% MF	1312565	15
						1	1	R3	RES. 9.09K 1/8 W 1% MF	1304855	16
						1	—	R4	RES. 34.8K 1/8W 1% MF	1303156	17
						—	1	R4	RES. 68.1K 1/8W 1% MF	1305252	18
						—	1	R5	RES. 34.8K 1/8W 1% MF	1303156	19
						1	—	R5	RES. 21.5K 1/8W 1% MF	1303155	20
						1	—	R6	RES. 11.5K 1/8W 1% MF	1309415	21
						—	1	R6	RES. 21.5K 1/8W 1% MF	1303155	22
						1	—	R7	RES. 5.62K 1/8W 1% MF	1305128	23
						—	1	R7	RES. 11.5K 1/8W 1% MF	1309415	24
						1	—	R8	RES. 2.74K 1/8W 1%	1304868	25
						—	1	R8	RES. 5.62K 1/8W 1%	1305128	26
						5	5	R9, R57, R59, R61, R70	RES. 10K 1/8W 1% MF	1303312	27
						12	12	R10, R11, R32, R33, R35, R36, R38, R39, R67, R69, R84, R83.	RES. 19.6K 1/8W 1% MF	1309419	28
						2	2	R12, R72	RES. 6.81K 1/8W 1% MF	1304870	29
						—	2	R13, R19	RES. 4.64K 1/8W 1% MF	1304856	30
						9	9	R14, R16, R43, R44, R45, R48, R51, R54, R68	RES. 1.5K 1/4 W 5%	1300391	31
						5	5	R18, R47, R50, R53, R56	RES. 3.9K 1/4 W 5%	1300444	32
						1	1	R20	RES. 200K 1/8W 1% MF	1305336	33
						1	1	R21	RES. 3.83K 1/8W 1% MF	1309413	34
						—	1	R22	RES. 100K 1/4 W 5%	1302466	35
						5	6	R23, R38, R41, R42, R65, R79	RES. 75K 1/4W 5%	1304841	36
						5	5	R29, R64, R73, R76, R78	POT. 10K 3/4W 20% 76PR	1309143-10	37
						3	3	R31, R66, R80	POT. 2K 3/4W 10% 76PR	1309143-08	38
						3	3	R37, R40, R87	RES. 330 1/4W 5%	1300295	39
						5	5	R58, R60, R62, R71, R82	RES. 511 1/8W 1% MF	1302411	40
						1	1	R75	RES. 24.3K 1/8W 1% MF	1309418	41
						2	2	R84, R85	RES. 10 1/2W 5%	1300168	42
						1	1	R86	RES. 2.7 1/2W 10%	1309444	43
						6	6	R89 THRU R94	RES. 22 1/4W 5%	1301969	44
						1	1	R88	RES. 750 1/4W 5%	1301401	45
						3	3	R28, R63, R77	RES. 1.96K 3/8W 1% MF	1304833	46
						—	1	R74	RES. 1.47K 1/8W 1% MF	1305108	47
						3	3	R34, R95, R96	RES. 10K 1/4W 5%	1300479	48
						G938-YA	G938-0				
						QTY	QTY	REF. DESIGNATION	DESCRIPTION	PART NO.	ITEM NO.

PARTS LIST

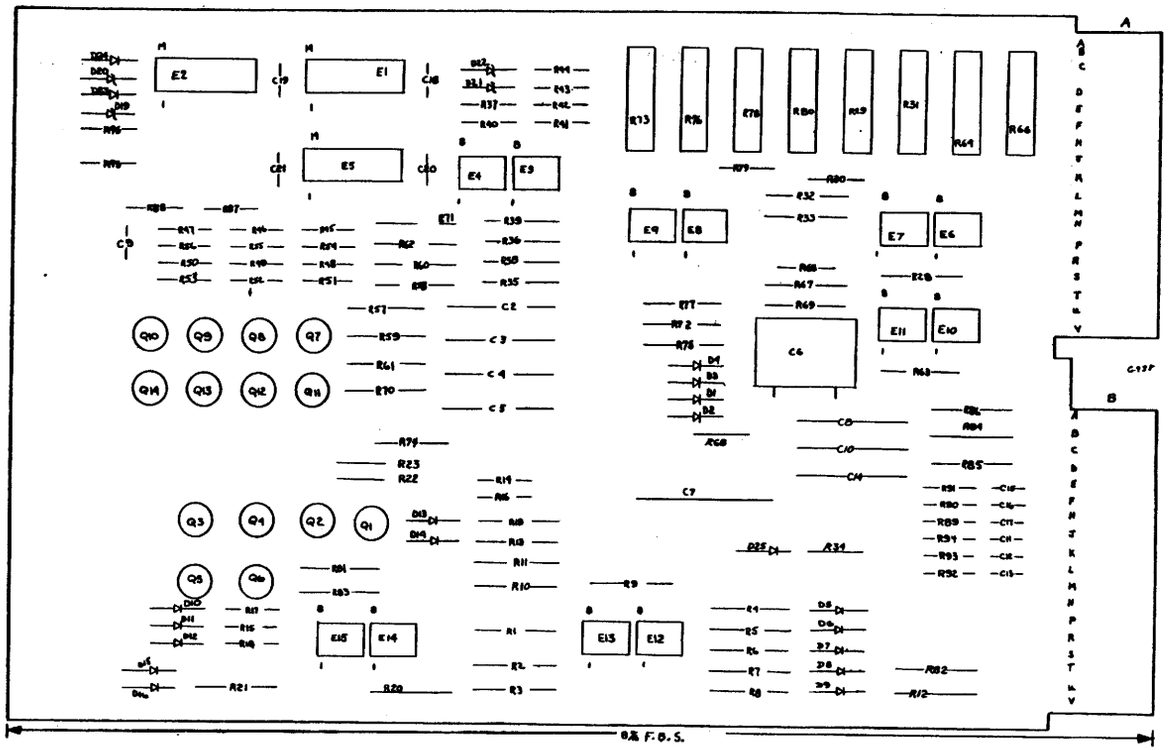

72741	SEE SHT 2
LM301	SEE SHT 2
IC TYPE	GND / +5V

GND AND 5V ARE USUALLY PIN 7 AND 14 RESPECTIVELY EXCEPTIONS ARE STATED ABOVE

IC PIN LOCATIONS

FIRST USED ON OPTION MODEL

ETCH BOARD REV. K

DEC NO.	EIA NO.	DEC NO.	EIA NO.
6534D	NONE		
2N5245			
D662	IN645		
D664	IN3606		
1746A	SAME		

SEMICONDUCTOR CONVERSION CHART

REV.	CHANGE NO.	CHK	REVISIONS
S		S. RADOFF	
		S. RADOFF	
S	G938-00011	A. Vowles 11-FEB-77	
R	G938-00010	J. RINALDIS	
P	G938-00009	J. RINALDIS 5/28/76	
N	G938-00008	J. RINALDIS 29-MAR-76	REVISED & REDRAWN

DRN. R. DOUCETTE	DATE 12-8-71	digital	
CHK'D. DEVALL	DATE 12-9-71	TITLE DEC PACK HEAD POSITION SERVO PREAMP RK5-1	
ENG. D. JENSEN	DATE 12-30-71		
PROJ. ENG. D. JENSEN	DATE 12-30-71		
PROD. A. KARLSBERG	DATE 2-3-72		
NEXT HIGHER ASSY		SIZE D CODE CS NUMBER G938-0-1 REV. S	
SCALE — / —		DIST.	
SHEET 1 OF 2			

working and specifications, herein, are the property of Digital Equipment Corporation and shall not be used or copied or used in whole or in part or disclosed for the manufacture or sale of items without permission. © 1973 DIGITAL EQUIP. C.

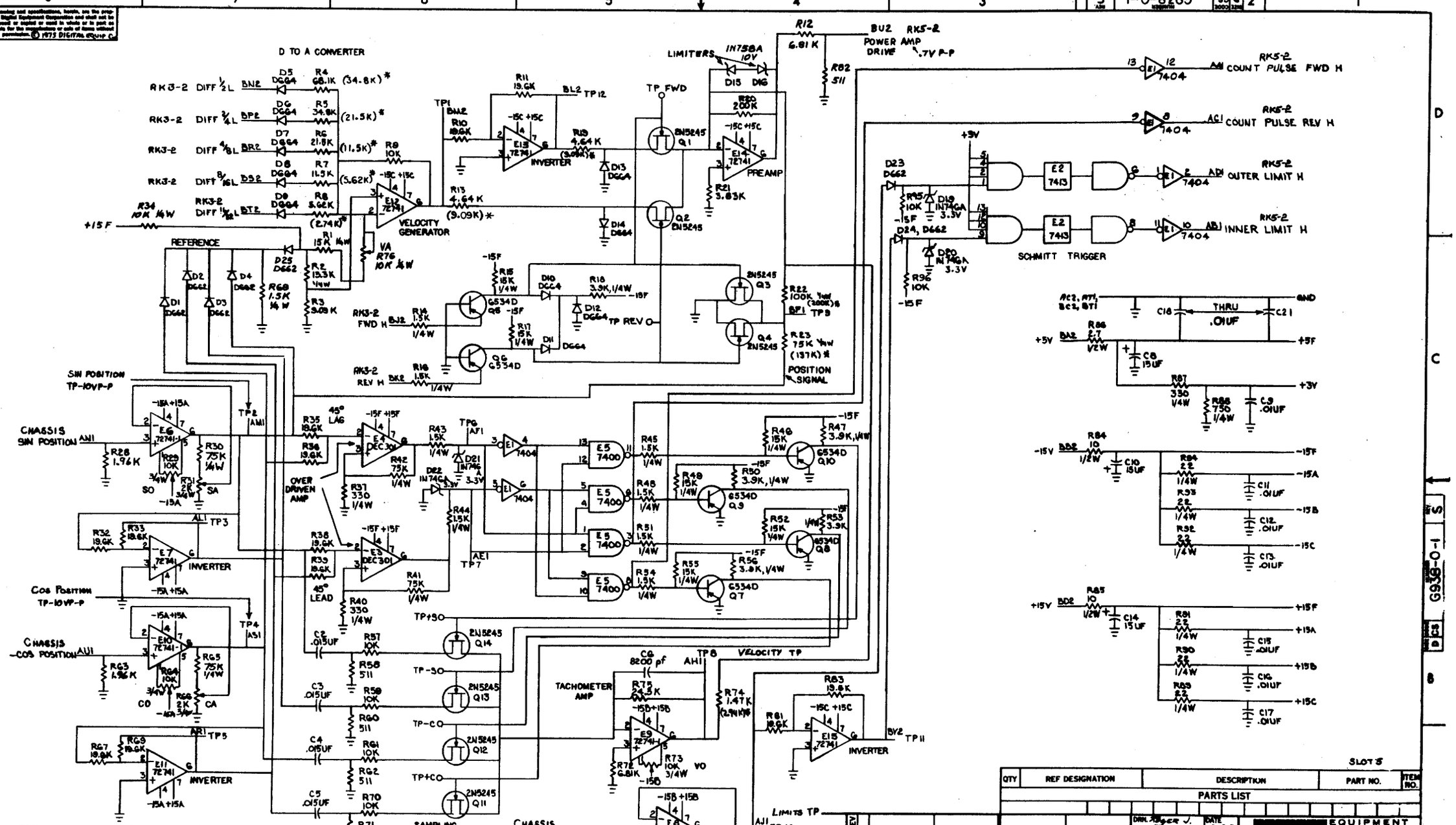

THIS SCHEMATIC IS FURNISHED ONLY FOR TEST AND MAINTENANCE PURPOSES. THE CIRCUITS ARE PROPRIETARY IN NATURE AND SHOULD BE TREATED ACCORDINGLY
COPYRIGHT 1971 BY DIGITAL EQUIPMENT CORPORATION

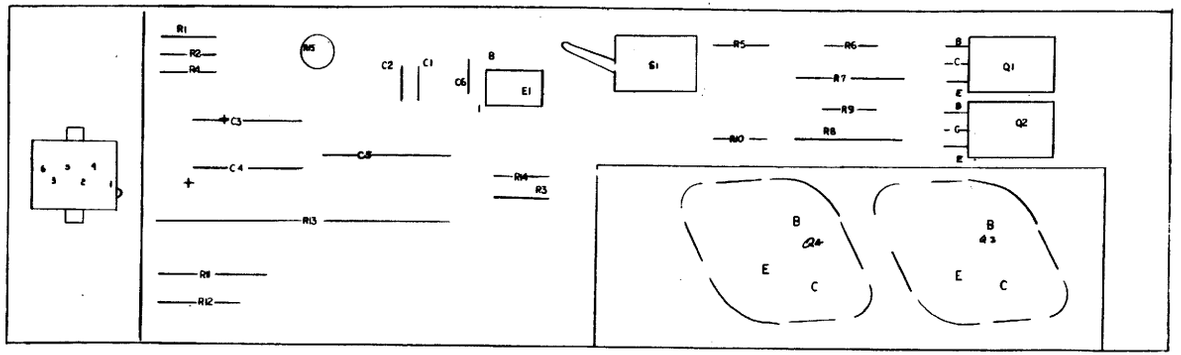

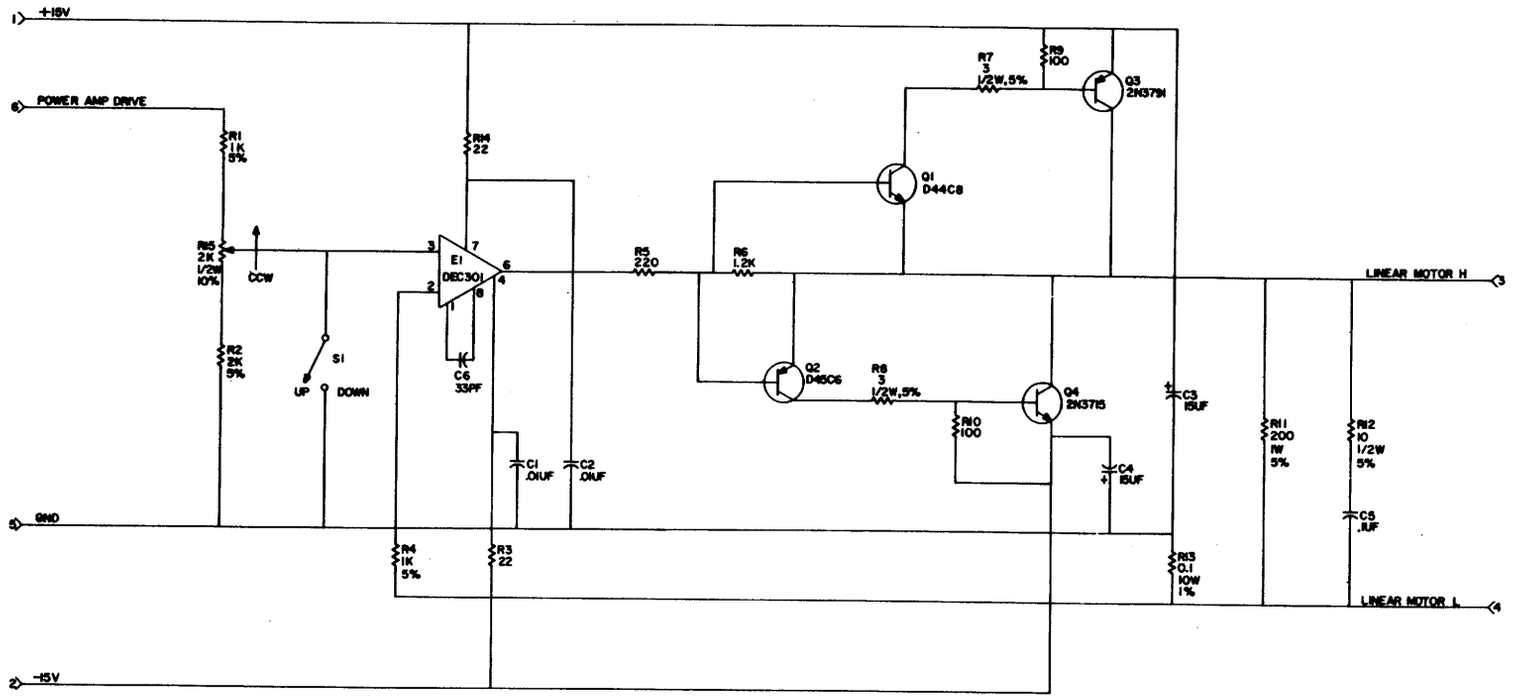

UNLESS OTHERWISE INDICATED:
RES. ARE 1/4W, 10%
R13 IS A CURRENT SAMPLING RES.

REVISIONS		
CHG. NO.	REV	
10001	F	

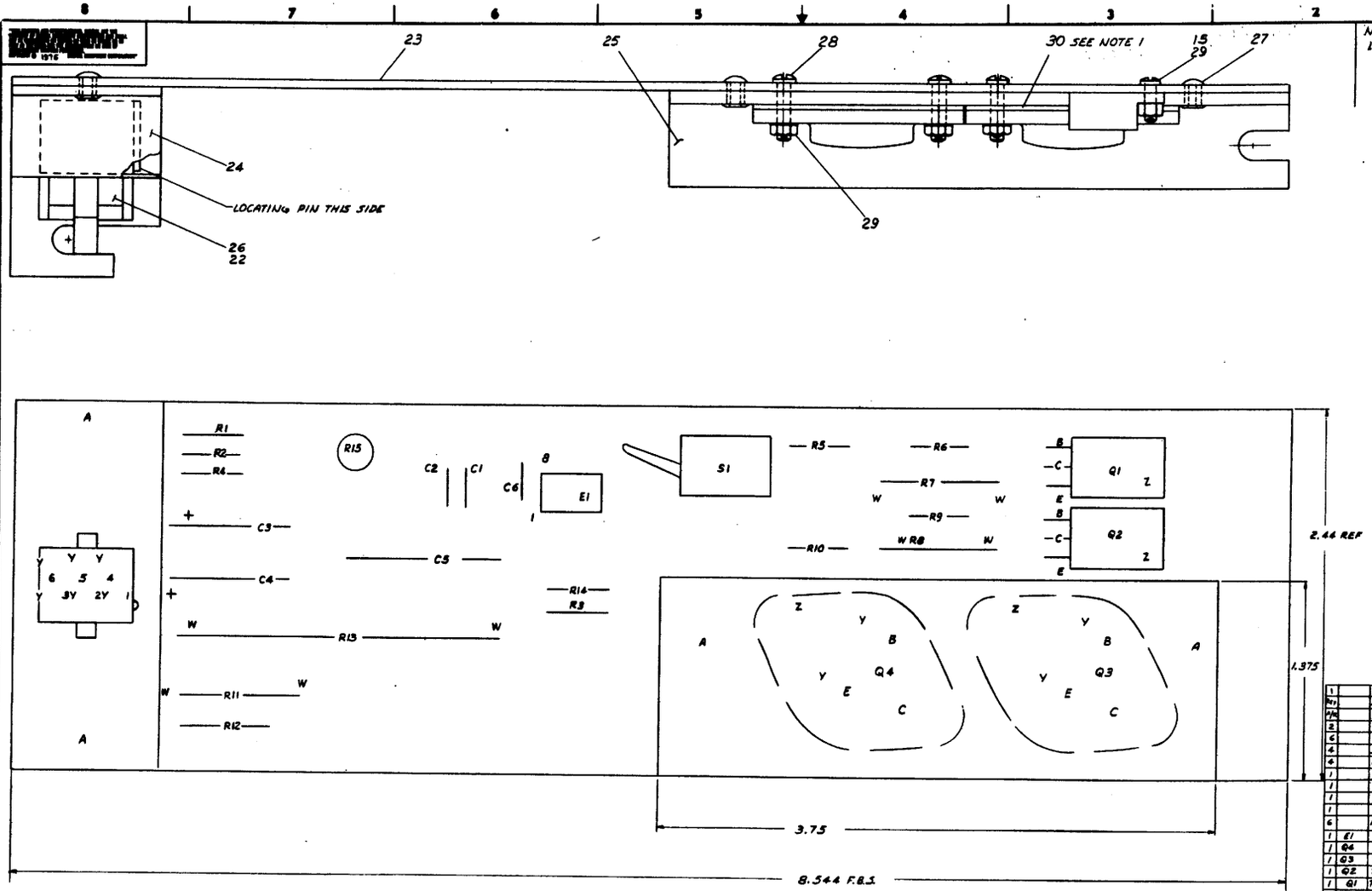

NOTES:
1. APPLY THERMAL JOINT COMPOUND, ITEM 31, BETWEEN TRANSISTORS, Q3 & Q4 AND WASHER, ITEM 30, ALSO BETWEEN WASHER, ITEM 30 AND BRACKET, HEAT SINK, ITEM 25.

1		RES 2K, 1/4W, 5%	1302288	33
REF		ASSY'S HOLE DRILLING LAYOUT	D-AH-H604-0-5	32
A/R		COMPOUND THERMAL JOINT	3009268	31
2		INSULATOR, WASHER	3006721	30
6		NUT, KEP #4-40	3006337	29
4		SCR BIND. HD. SLOT #4-40 X 1/4	3006012-4	28
4		EYELET .121 O.D. X .218 LG	3006732	27
1		6 PIN MATE-N-LOCK	1209330-06	26
1		BRACKET, HEAT SINK	CMD-3503810-4	25
1		BRACKET SERVO BOARD	CMD-3503810-00	24
1		ETCHED CIRCUIT BOARD	3009741	23
6		PINS FOR MATE-N-LOCK	1209456-01	22
1	E1	IC LM301	1910282	21
1	Q4	TRANS 2N3715	1803068	20
1	Q3	TRANS 2N3791	1809581	19
1	Q2	TRANS DEC 2N5086	1810414	18
1	Q1	TRANS DEC 2N4410 OR TIP31A	1810421	17
2	R4, R1	RES 1K, .25W, 5%	1300365	16
2		SCR #4-40 X 1/4 BIND. HD. SLOT	3006009-4	15
1	R15	POT 2K, .5W, 10%, 62PR	1309150-07	14
1	R6	RES 1.2K .25W 5%	1301320	13
1	R5	RES 220, .25W 5%	1300271	12
1	R11	RES 200 1W 5%	1302382	11
2	R3, R10	RES 100, .25W, 5%	1300229	10
2	R9, R14	RES 22 .25W, 5%	1301369	9
1	R12	RES 10, .5W, 5%	1300168	8
2	R7, R8	RES 3.0, 2W, 5%	1301643	7
1	R13	RES .1, 10W, 1%	1309108	6
1	S1	SWITCH, TOGGLE T-8001	1210209	5
2	C3, C6	CAP 15UF 20V 10%	1004812	4
1	C6	CAP 33PF, 100V, 5%	1000009	3
1	C5	CAP .1UF, 100V, 10%	1002342	2
2	C1, C2	CAP .01UF 50V, 20%	1001610	1
REF		MODULE ECO HISTORY	B-AH-H604-0-6	
REF		X-Y COORDINATE HOLE LOC.	K-CO-H604-0-4	
REF		CIRCUIT SCHEMATIC	D-CS-H604-0-1	

DESCRIPTION | DWG. SHEET NO. | TYPE NO.

UNLESS OTHERWISE SPECIFIED DIMENSIONS ARE IN INCHES

QUANTITY & VARIATION

THIRD ANGLE PROJECTION

DRAWN D. Davis 10-27-71
CHECK'D 8-1-72
ENG. 11-17-72
PROD. 11-20-72
FIRST USED ON RK03
TITLE HEAD POSITION SERVO POWER AMP
DO NOT SCALE DWG.
D-LA-RK03-0-0
SCALE 4/1
SHEET 1 OF 1
SIZE B CODE IDENT NO. 0 0 0 0 0
DWG. NO. LA H604-0-0 REV. K

A		Data Sheet	3/4/70	D. Jensen					
B		Dwg. No.	4-17-72	B. J. Wells	H604-0-0	1			
C		Dwg. No.			H604-0-0	2			
D		Dwg. No.			H604-0-0	3			
E		Data Sheet	7-1-73	D. Jensen	H604-0-0	4			
F		Dwg. No.			H604-0-0	5			
G		Dwg. No.	11-14-73		H604-0-0	6			
H		Dwg. No.	11-27-73		H604-0-0	7			
J		Dwg. No.	11-27-73		H604-0-0	8			
K		Dwg. No.	11-27-73		H604-0-0	9			

THIS SCHEMATIC IS FURNISHED ONLY FOR TEST AND MAINTENANCE PURPOSES. THE CIRCUITS ARE PROPRIETARY IN NATURE AND SHOULD BE TREATED ACCORDINGLY.
COPYRIGHT 1971 BY DIGITAL EQUIPMENT CORPORATION

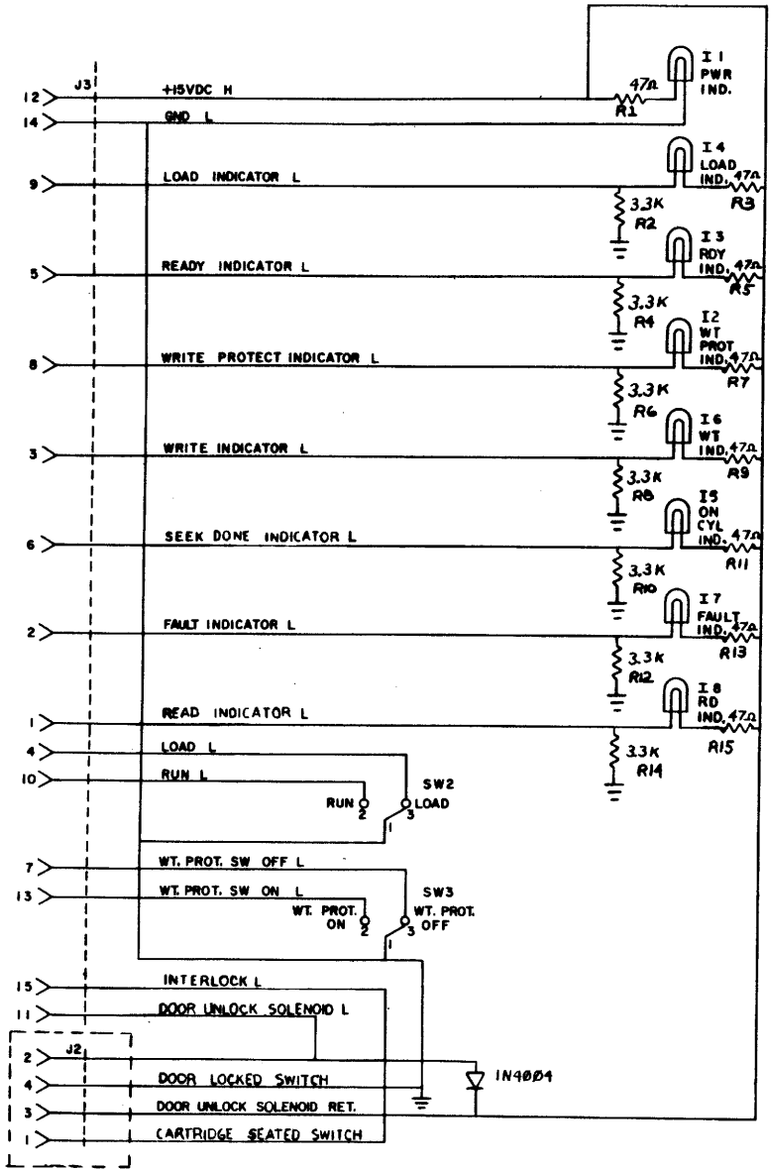

REVISIONS	CHK	CHG NO.	REV
		00001	B
		00002	C
		00003	D
		00004	E
		00005	E
		00006	F

DRN. S. COOPER	DATE 11-20-71	
CHK'D	DATE 11-23-71	
ENG.	DATE 11 Dec 71	
PROD.	DATE 11 Dec 71	

TRANSISTOR & DIODE CONVERSION CHART

DEC	EIA	DEC	EIA

digital EQUIPMENT CORPORATION MAYNARD, MASSACHUSETTS

TITLE RK7-1
RK05 CONTROL PANEL

SIZE	CODE	NUMBER	REV.
C	CS	5409698-0-1	F

PRINTED CIRCUIT REV. E-P2

DEC FORM NO. DRC 102

SIZE	CODE	NUMBER	REV.
C	CS	5409698-0-1	F

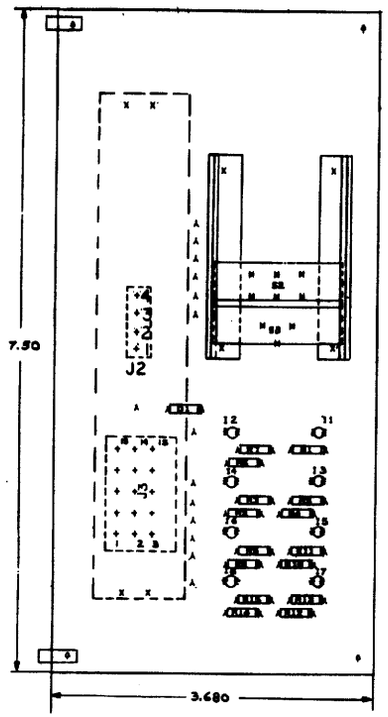

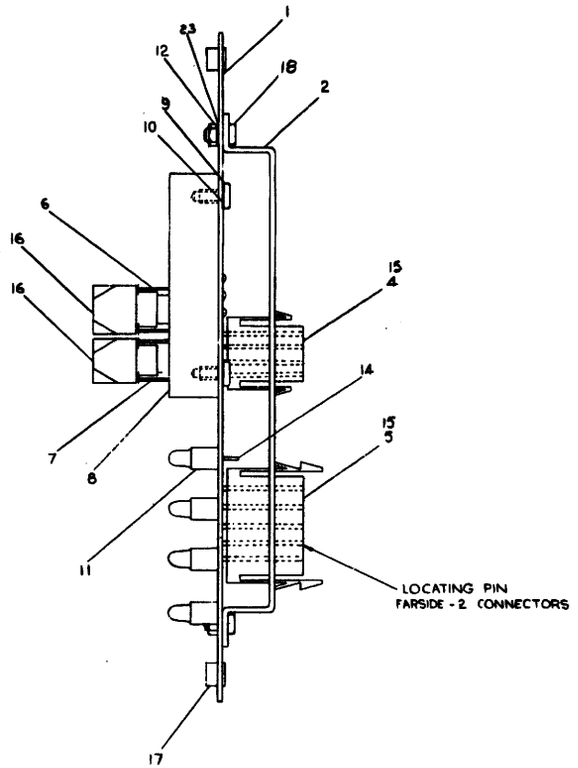

QTY.	REF DESIGNATION	DESCRIPTION	PART NO.	ITEM NO.
4		WASHER	9006655	23
1	D1	IN4004 DIODE	1105796-00	22
7	R2,4,6,8,10,12,14	3.3 K 1/4 w, 5% RESISTOR	1300439-00	21
8	R1,3,5,7,9,11,13,15	47 Ω, 1/4 w, 5% RESISTOR	1300202-00	20
REF		ASSY/DRILLING HOLE LAYOUT	D-H-5409698-0-5	19
4		SCR, PHL PAN HD #4-40×5/16 LG	9006010-1	18
2		HWT CLIP #6-32	9008495	17
2		SWITCH BUTTON	1205317-07	16
19		PIN SOCKET MATE-N-LOCK	1209456-01	15
16		TERMINAL SOLDERLESS	9007812	14
[illegible]		[illegible]	[illegible]	[illegible]
4		NUT KEPS #4-40	9006557	12
8	11,12,13,14,15,16,17,18	LAMP	1209163	11
4		LOCK WASHER INTERNAL 6-32	9006633	10
4		SCREW PHL PAN HEAD 6-32 X 5/16 LG	9006021-1	9
8		SWITCH MOUNTING BAR	B-MD-5509830-0-0	8
1	S3	SWITCH, ROCKER	1205375	7
1	S2	SWITCH, ROCKER	1205941	6
1	J3	HOUSING, SOCKET MATE-N-LOCK 15 PIN	1209350-15	5
1	J2	HOUSING, SOCKET MATE-N-LOCK 4 PIN	1209350-04	4
				3
1		CONNECTOR BRACKET	C-MD-5409629-0-0	2
1		ETCHED CIRCUIT BOARD	5009697	1
REF		MODULE ECO HISTORY	B-MH-5409698-0-6	
REF		X-Y CO-ORDINATE HOLE LOCATION	X-CO-5409698-0-4	
REF		CIRCUIT SCHEMATIC	C-CS-5409698-0-1	

PARTS LIST

ETCH BOARD REV E

FIRST USED ON OPT/MOD RK05

DEC NO.	EIA NO.	DEC NO.	EIA NO.

SEMICONDUCTOR CONVERSION CHART

IC TYPE	GND	+5V
GND AND 5V ARE USUALLY PIN 7 AND 14 RESPECTIVELY. EXCEPTIONS ARE SHOWN ABOVE		

IC PIN LOCATIONS

ITEM NO	AWG	FROM PT	TO PT

JUMPER LIST

NEXT HIGHER ASSY
D-UA-RK05-0-0

SCALE 2/1
SHEET 1 OF 1

[redacted] EQUIPMENT CORPORATION.

RK7-2
CONTROL PANEL
(RK05)

E IA 5409698-0-0 F

5409698-0-0

This drawing and specifications, herein, are the property of Digital Equipment Corporation and shall not be reproduced or copied or used in whole or in part as the basis for the manufacture or sale of items without written permission.

NOTE:
1. RELAY CONTACTS ARE SHOWN IN THE DE-ENERGIZED POSITIONS.
2. SAFETY RELAY L AND BLOWER MTR RELAY DR ARE THE SAME SIGNAL.
3. SPINDLE MOTOR RELAY L AND DISK RELAY DR ARE THE SAME SIGNAL.
4. THIS MODULE MUST BE UL APPROVED

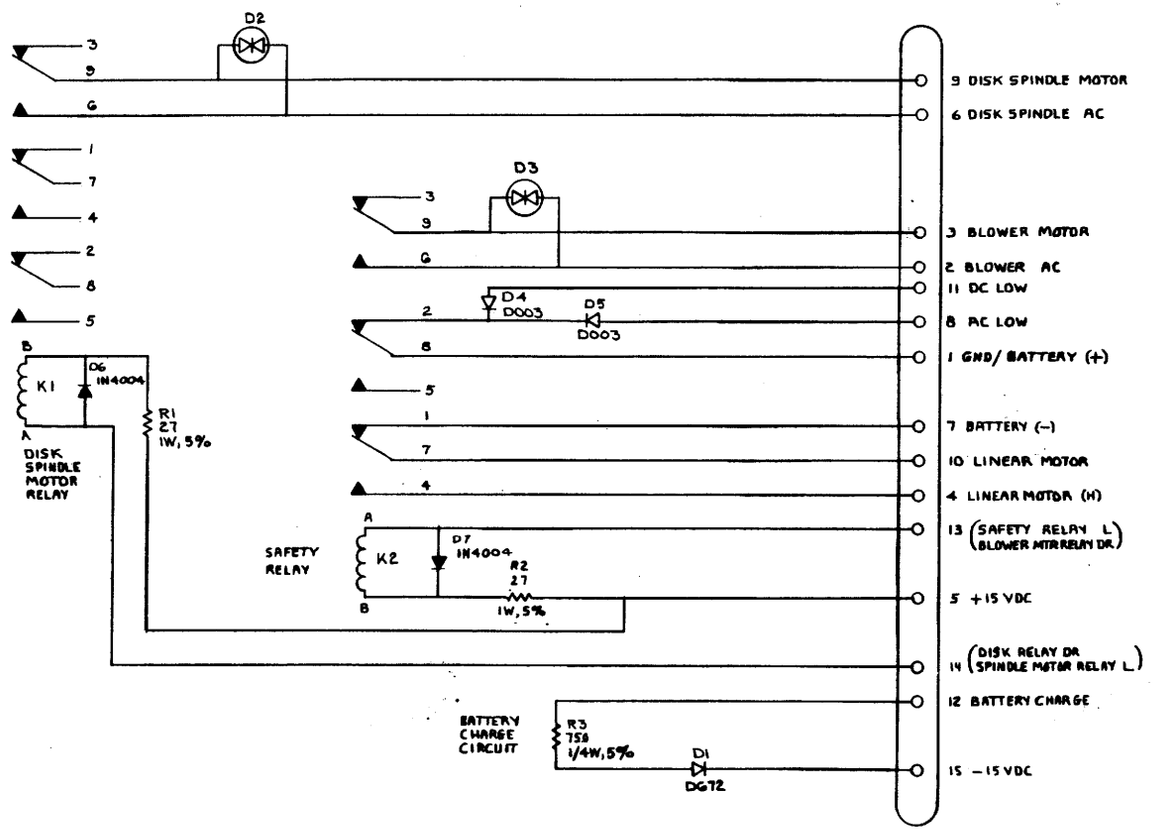

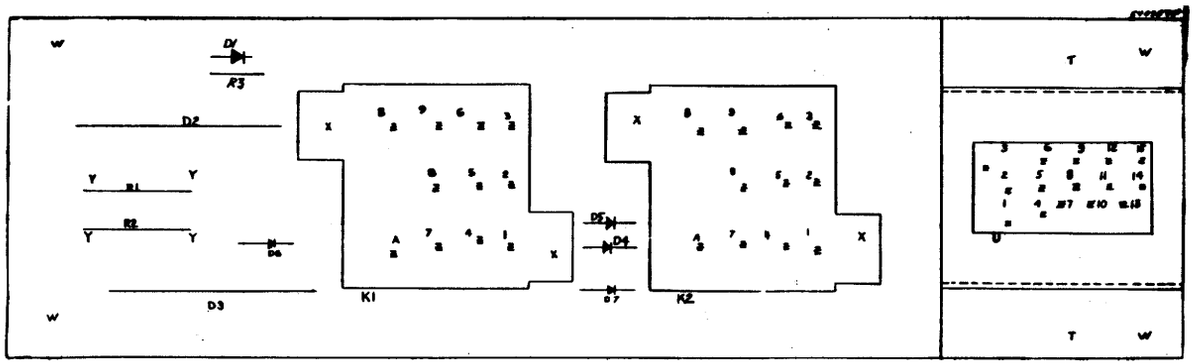

QTY	REF DESIGNATION	DESCRIPTION	PART NO.	ITEM NO.

PARTS LIST

ETCH BOARD REV F

DEC NO.	EIA NO.	DEC NO.	EIA NO.
D003	IN994		
D672	IN3653		

SEMICONDUCTOR CONVERSION CHART

REVISIONS: REV | CHANGE NO. | CHK

DRN. Roger J Doucette DATE 12-9-71
CHK'D. DATE 12-15-71
ENG. DATE 16 Jan 72
PROJ. ENG. DATE 16 Jan 72
PROD. DATE

NEXT HIGHER ASSY

SCALE

SHEET 1 OF 1

digital EQUIPMENT CORPORATION MAYNARD, MASSACHUSETTS

TITLE DEC PACK MOTOR RELAYS

SIZE D CODE CS NUMBER 5409574-0-1 REV. H

DIST.

DEC FORM NO.

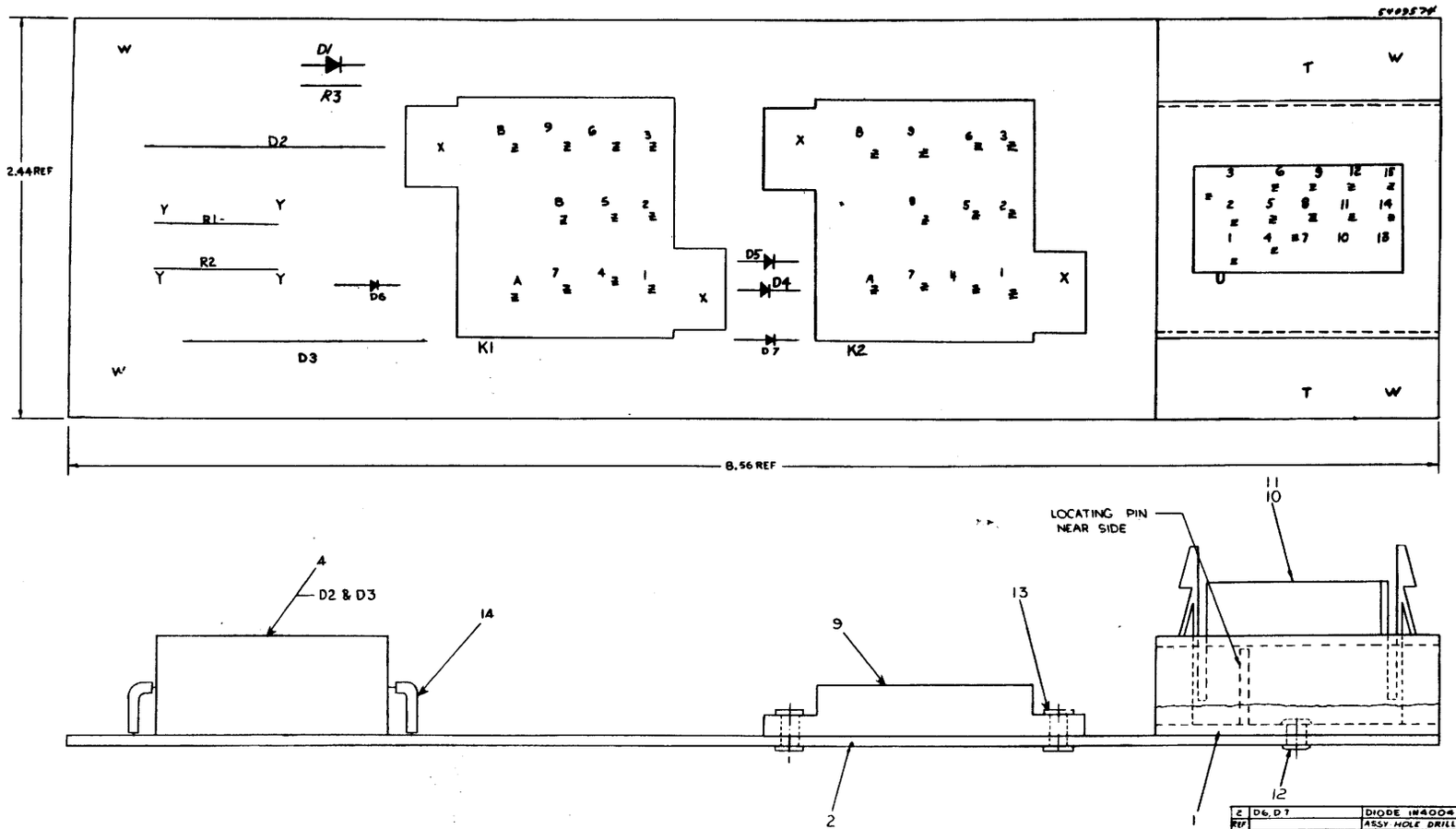

REF				
2	D6, D7	DIODE 1N4004	1105796	18
REF		ASSY HOLE DRILLING LAYOUT	DWG 5409574-0-0/3	
AR		TUBING #18 AWG TEFLON TYP	9107278-11	14
4		EYELET 65-4-5	9006746	13
2		EYELET .121 OD X .213 LG	9006732	12
13		PINS FOR MATE-N-LOCK	1209456-01	11
1		15 PIN MATE-N-LOCK	4028350-15	10
2		RELAY SOCKET	1210284	9
2	K1 K2	RELAY GP 3423AD1000	1210883	8
2	R1 R2	RESISTOR 27 1W 5%	1301516	7
1	R3	RESISTOR 750 1/4W 5%	1101401	6
1	D1	DIODE D672	1105372	5
2	D2, D3	ARC SUPPRES GRS703P4B4	1100104	4
2	D4, D5	DIODE GER D003	1100100	3
1		ETCHED CIRCUIT BOARD	2009373	2
REF		MODULE ECO HISTORY	5MH-5409574-00	
REF		BRACKET MOTOR RELAY	CMD-5109811-00	1
REF		X-Y COORD HOLE LOCAT	XCO-5409574-00	
REF		CIRCUIT SCHEMATIC	SCS-5409574-00	
QTY.	REF DESIGNATION	DESCRIPTION	PART NO.	ITEM NO.

PARTS LIST

5409574-00

CAUTION
CHANGE COULD AFFECT U.L. LISTING

FIRST USED ON
RK05

ETCH BOARD REV F

SEC NO.	EIA NO.	SEC NO.	EIA NO.
D-672	1N3653		
D-003	1N994		

SEMICONDUCTOR CONVERSION CHART

IC TYPE	GND	+5V
GND AND 5V ARE USUALLY PIN 7 AND 14 RESPECTIVELY EXCEPTIONS ARE STATED ABOVE		

IC PIN LOCATIONS

STEM NO	AWG	FROM PT	TO PT

JUMPER LIST

DRAWN	D. JENSEN	11/1/72
ENGR		
MFG		
QA		
	5409574-00001	

[redacted] EQUIPMENT CORPORATION

DECPACK
MOTOR RELAYS

D-UA-RK05-0-0

SCALE 4:1

E I A 5409574-0-0 H

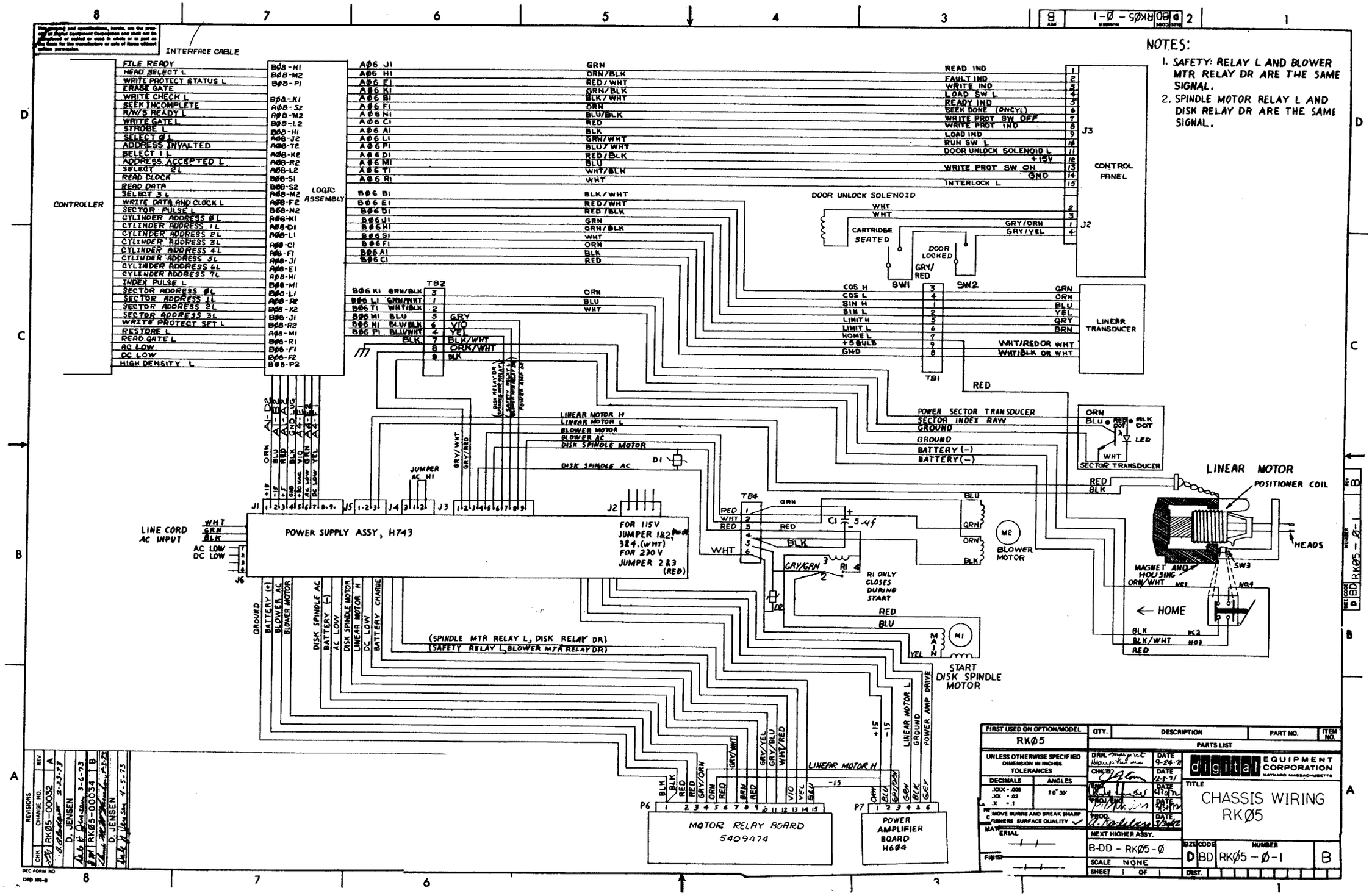
NOTES:
1. SAFETY: RELAY L AND BLOWER MTR RELAY DR ARE THE SAME SIGNAL.
2. SPINDLE MOTOR RELAY L AND DISK RELAY DR ARE THE SAME SIGNAL.
INTERFACE CABLE
CONTROLLER
LOGIC ASSEMBLY
CONTROL PANEL
LINEAR TRANSDUCER
DOOR UNLOCK SOLENOID
CARTRIDGE SEATED
DOOR LOCKED
SW1
SW2
TB1
TB2
TB4
SECTOR TRANSDUCER
LINEAR MOTOR
POSITIONER COIL
HEADS
MAGNET AND HOUSING
HOME
SW3
M2
BLOWER MOTOR
M1
START DISK SPINDLE MOTOR
POWER SUPPLY ASSY, H743
LINE CORD AC INPUT
FOR 115V JUMPER 1&2, 3&4 (WHT)
FOR 230V JUMPER 2&3 (RED)
R1 ONLY CLOSES DURING START
(SPINDLE MTR RELAY L, DISK RELAY DR)
(SAFETY RELAY L, BLOWER MTR RELAY DR)
MOTOR RELAY BOARD 5409474
POWER AMPLIFIER BOARD H604
FIRST USED ON OPTION/MODEL
RKØ5
UNLESS OTHERWISE SPECIFIED DIMENSION IN INCHES. TOLERANCES
DECIMALS .XXX = .005 .XX = .02 .X = .1
ANGLES ±0° 30'
REMOVE BURRS AND BREAK SHARP CORNERS. SURFACE QUALITY
MATERIAL
FINISH
QTY. DESCRIPTION PART NO. ITEM NO.
PARTS LIST
DRN. 9-24-71
CHK'D
ENG.
MOD.
NEXT HIGHER ASSY.
B-DD - RKØ5-Ø
SCALE NONE
SHEET 1 OF 1
digital EQUIPMENT CORPORATION MAYNARD, MASSACHUSETTS
TITLE
CHASSIS WIRING RKØ5
SIZE D CODE BD NUMBER RKØ5 - Ø-1 B
REVISIONS
CHANGE NO. RKØ5-00032 A 2-23-73 D. JENSEN
RKØ5-00034 B 3-6-73 D. JENSEN 4-5-73
DEC FORM NO DRD M3-B

DIGITAL EQUIPMENT CORPORATION
MAYNARD, MASSACHUSETTS

ACCESSORY LIST

MADE BY G. Schneider DATE	CHECKED DATE 8/17/72	SECTION
ENG DATE 8/17/72	PROD DATE 8/17/72	ISSUED SECT.

LEGEND
- D DOCUMENT
- DN DOCUMENT CHANGE NOTICE
- PA PAPER TAPE ASCII
- PB PAPER TAPE BINARY
- PM PAPER TAPE READ-IN-MODE

ITEM NO.	DWG NO./PART NO.	DESCRIPTION	QUANTITY/VARIATION: RK11's for all	QUANTITY/VARIATION: RK8E's for all						KIT CHECK BY ____ DATE ____	INSTALLATION CHECK BY ____ DATE ____
1	RK05-0	Customer Print Set (B-DD-RK05-0 Sheet one only)	1	1							
~~2~~	~~DEC-RK05-IPB-1~~	~~ILLUSTRATED PARTS BREAK DOWN FOR RK05~~	~~1~~	~~1~~							
3	DEC-00-RK05JF-DA	Maintenance Manual	1	1							
*** 4	BC 11A-08	Unibus Cable 8 feet	1	1							
5	2200007	Head Cleaning Kit	1	1							
6	3010350-00	Disk Cartridge 12 Sector	1	0							
7	3010350-02	Disk Cartridge 16 Sector	0	1							
8*	A-AD-7009276-0-0	Mounting Hardware KIT	1	1							
9*	1209152-0-2 REF	Slide Chassis (Use set that was issued to Assy Line)	1	1							
	NOTE: The following items are additionally required when unit is shipped in a rack.										
10	749691-1	Shipping Bracket (Left Hand)	1	1							
11	749691-2	Shipping Bracket (Right Hand)	1	1							
12**	3611382	Drive Identification Numbers	1	1							
	*NOTE: If unit is shipped in a rack, Items 8 and 9 are mounted to the rack.										
	**NOTE: Attach the drive identification number set to the instruction sheet #DEC-16-(379)-1094-N573 using transparent adhesive tape. Insert sheet behind front cover of maintenance manual										
	*** NOTE: MAXIMUM TOTAL UNIBUS CABLE LENGTH = 50 FEET										

TITLE DECpack Assembly	ASSY. NO.	SIZE A	CODE AL	NUMBER RK05-0-17	REV. F	ECO NO RK05J 00006
	SHEET 1 OF 1	DIST.				

DEC 16-(325)-1075-N172 DRA 121

digital EQUIPMENT CORPORATION
MAYNARD, MASSACHUSETTS

DRAWING DIRECTORY

CUSTOMER PRINT SET INDEX

THIS IS PRINT SET

	SEQUENCE	SEQUENCE
DRAWING DIRECTORY	B-DD-H743-Ø SHEET #1 ONLY	
CIRCUIT SCHEMATIC	D-CS-H743-Ø-1	
+5V REGULATOR	E-IA-5409503-0-0	
CIRCUIT SCHEMATIC	D-CS-5409503-0-1	
±15V REGULATOR	E-IA-5409484-0-0	
CIRCUIT SCHEMATIC	D-CS-5409484-0-1	

MFG PRINTS

POWER SUPPLY	E-UA-H743-0-0
POWER SUPPLY (PL)	A-PL-H743-0-0
DRAWING DIRECTORY	B-DD-H743-Ø
PACKAGING INSTRUCTION	A-PI-3700130-0-0

UNIT VARIATIONS

VARIATION	TITLE	PRINT SET TYPE
H743-AA	POWER SUPPLY 115V	X
H743-AB	POWER SUPPLY 230V	X

REVISIONS

REV	CHG. NO.	DATE
A	RK05-19	[illegible]
B	H743-1	8/72
C	H743-2	[illegible]
D	H743-3	[illegible]
E	H743-4	[illegible]
F	H743-5	[illegible]
H	H743-6	2-74
J	H743-7	6-74
K	H743-10	3-75
L	H743-11	5-75
M	H743 12	6-75
N	H743-13	8-75
P	H743-14	9-75
R	H743-15	1-76
S	H743-16	4-76
T	H743-17	12-76
U	H743-18	2-76
V	H743-19	1-78

USED ON OPTION/MODEL	
RKØ5	

DRN. J. FLEMING	DATE 12/16/71	TITLE POWER SUPPLY (H743)
CHK'D. [illegible]	DATE 7-7-72	
PROJ ENG. [illegible]	DATE 4/26/72	
PROD. [illegible]	DATE 4/19/72	
FIELD SERV.	DATE	
SHEET 1 OF 3		SIZE B · CODE DD · NUMBER H743-Ø · REV V · DIST 6

DRB 106

DEC 16—(325)—1062—1—N871

This drawing and specifications, herein, are the property of Digital Equipment Corporation and shall not be reproduced or copied or used in whole or in part as the basis for the manufacture or sale of items without written permission. 1973

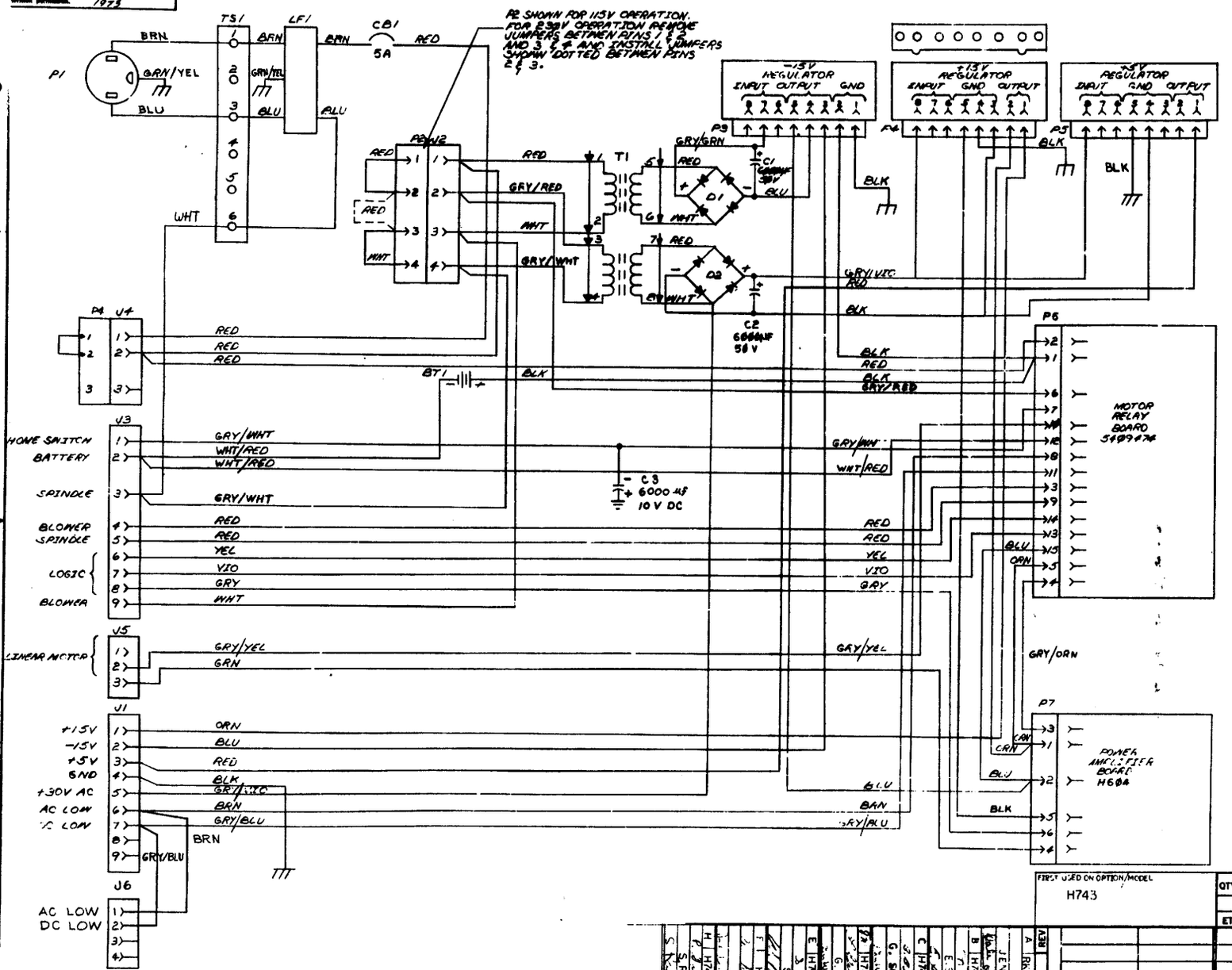

FIRST USED ON OPTION/MODEL	QTY	REF DESIGNATION	DESCRIPTION	PART NO.	ITEM NO.
H743			PARTS LIST		
		ETCH BOARD REV			

DEC NO	EIA NO.	DEC NO.	EIA NO.
SEMICONDUCTOR CONVERSION CHART			

REV	ECO NO.	CHANGE	CHD
A	[illegible]	JENSEN	
B	H743-00013	E. SIMMONS	
C	H743-00002	G. SCHNEIDER	
D	H743-00004		
E	H743-00006	G. SCHNEIDER	
F	H743-00015	J. RINALDI	
G	H743-00019	S. RADOFF	

REVISIONS

DRN. [illegible] DATE 10/6/72
CHKD. [illegible] DATE 11-2-71
ENG. [illegible] DATE 11-2-71
PROJ. ENG. [illegible] DATE 11-2-71
PROD. [illegible] DATE 10/6/72
NEXT HIGHER ASSY B-DD-H743-0
SCALE NONE
SHEET 1 OF 1

[redacted] EQUIPMENT CORPORATION MAYNARD, MASSACHUSETTS

TITLE CIRCUIT SCHEMATIC H743

SIZE D CODE CS NUMBER H743-0-1 REV. H

DIST.

This drawing and specifications, herein, are the property of Digital Equipment Corporation and shall not be reproduced or copied or used in whole or in part as basis for the manufacture or sale of items without written permission. 1975

WIRE TABLE

ITEM NO.	DESCRIPTION AWG	COLOR	LENGTH IN. ± 1/8"	STRIP LENGTH-X	STRIP LENGTH-Y	CONNECTIONS FROM	TO
42	—	BLK	2 1/8	—	1/2"	L1	CATHODE D2 — LUG
42	—	BLK	2 1/8	—	1/2"	L1	R21-T2
68	18	VIO	2 1/4	1/2"	1/2"	Q5-C	CATHODE D2 — LUG
66		GRN	4 1/4	1/2"	1/2"	D2 ANODE	ANODE D3 — LUG
65		YEL	4 1/8	1/2"	1/2"	D3 CATHODE	R21-T1
70		WHT	4 3/8	1/2"	1/2"	SPLIT LUG #1	Q5-E
69		GRY	5 1/4	1/2"	1/2"	SPLIT LUG #2	Q5-B
68		VIO	5 1/4	1/2"	1/2"	SPLIT LUG #3	Q5-C
67		BLU	8	1/2"	1/2"	SPLIT LUG #4	R21-T2
66		GRN	5 3/4	1/2"	1/2"	SPLIT LUG #6	ANODE D3 — LUG
65	18	YEL	8 1/4	1/2"	1/2"	SPLIT LUG #8	R21-T1

SEE NOTE #5

EXTERNAL COMPONENTS

ITEM NO.	LENGHT	DESCRIPTION	POL	CONNECTIONS FROM	TO	POL
45	NOTE #2	RES. 100 Ω W5%		Q5-E	Q5-B	
46	NOTE #3	CAP. 10UF, 50V, 10%	+	Q5-E	ANODE D3 — LUG	−

NOTES:

1. R13 IS USED FOR OUTPUT VOLTAGE ADJUSTMENT. R7 IS USED FOR OUTPUT CURRENT ADJUSTMENT.
2. CUT LEADS OF RES. (R22) SO THERE IS 3/8" OF A LEAD LEFT ON BOTH ENDS. (R22, 3/8")
3. CUT LEADS OF CAP. (C11) SO THERE IS 1/2" OF A LEAD LEFT ON BOTH ENDS. (C11, 1/2")
4. THERMAL COMPOUND (ITEM 31) IS TO BE APPLIED TO BOTH SIDES OF ALL THERMAL INSULATORS (ITEM 49, 50 & 63). BOTH SIDES OF EACH INSULATOR SHOULD BE COVERED, LEAVING NO VOIDS WHEN INSTALLED. CARE MUST BE EXERCISED SO THAT NO EXTRA COMPOUND INTERFERES WITH ANY ELECTRICAL CONNECTION MADE TO ANY DIVICE.
5. WHEN ASSEMBLING THE WIRES FROM THE CIRCUIT BOARD TO THE HEAT SINK, PLACE THE MODULE AGAINST THE HEAT SINK, WIRE AS SHOWN BY THE WIRE LIST AND MAKE A SERVICE LOOP AT THE CONNECTIONS ON THE HEAT SINK TO TAKE UP ANY EXCESS WIRE THAT MIGHT BE AVAILABLE.

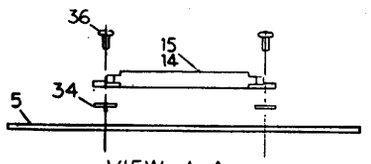

VIEW A-A
SCALE: NONE

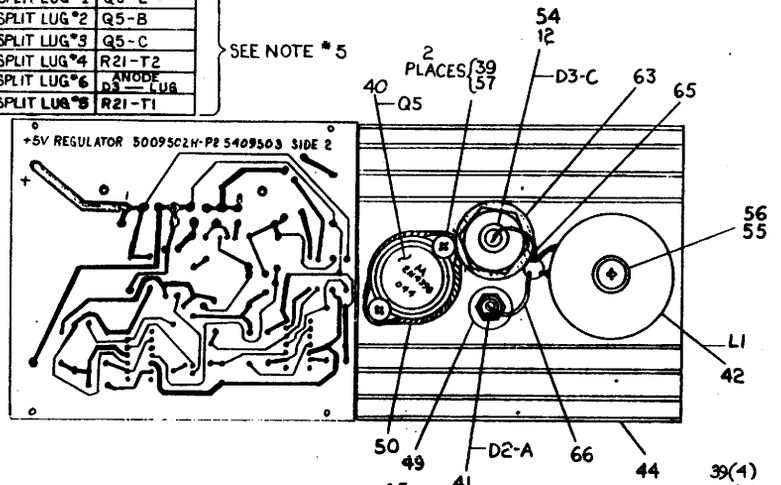

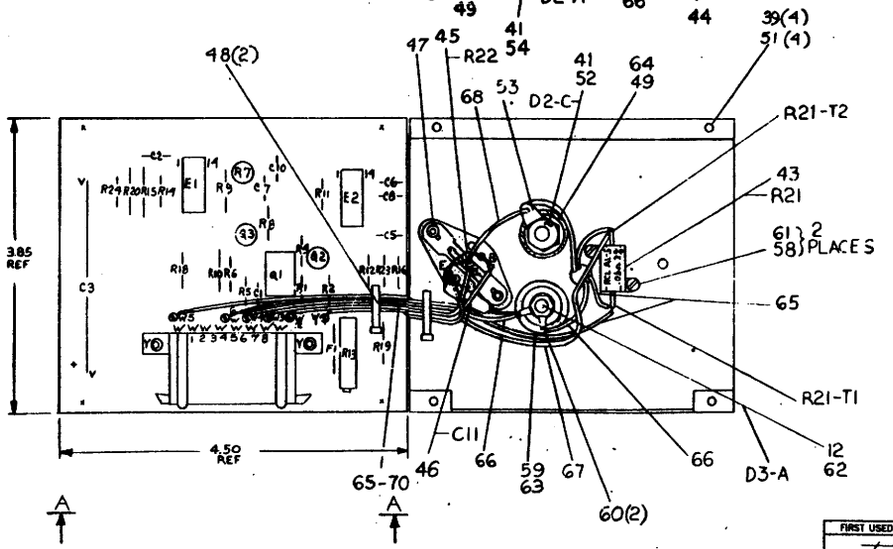

IC TYPE	GND	+5V

GND AND 5V ARE USUALLY PIN 7 AND 14 RESPECTIVELY EXCEPTIONS ARE STATED ABOVE

IC PIN LOCATIONS

FIRST USED ON OPTION MODEL
— / —

DEC NO.	EIA NO.	DEC NO.	EIA NO.
		IN 3882	SAME
		2N4398	— / —
		D4506	— / —
		2N4441	— / —
		DEC 6534 D	MPS 6534
		IN 752 A	SAME

SEMICONDUCTOR CONVERSION CHART

REV	CHANGE NO.	REVISIONS
R	5409503-00013	REVISED & REDRAWN

QTY	REF DESIGNATION	DESCRIPTION	PART NO.	ITEM NO.

PARTS LIST

ETCH BOARD REV H

DRN G MARINI 8-21-71
CHK'D J FLEMING 8-27-71
DES P SVENDSON 8-27-71
PROJ ENG P SVENDSON 8-27-71
MFG P FAZIO 8-25-71
NEXT HIGHER ASSY — / —
SCALE NONE
SHEET 1 OF 1

[redacted] EQUIPMENT CORPORATION MAYNARD, MASSACHUSETTS

TITLE + 5 VOLT POWER REGULATOR

SIZE D NUMBER IA 5409503-0-0 REV R

THIS SCHEMATIC IS FURNISHED ONLY FOR TEST AND MAINTENANCE PURPOSES. THE DATA ARE PROPRIETARY IN NATURE AND SHOULD BE TREATED ACCORDINGLY COPYRIGHT 1971 BY DIGITAL EQUIPMENT CORPORATION

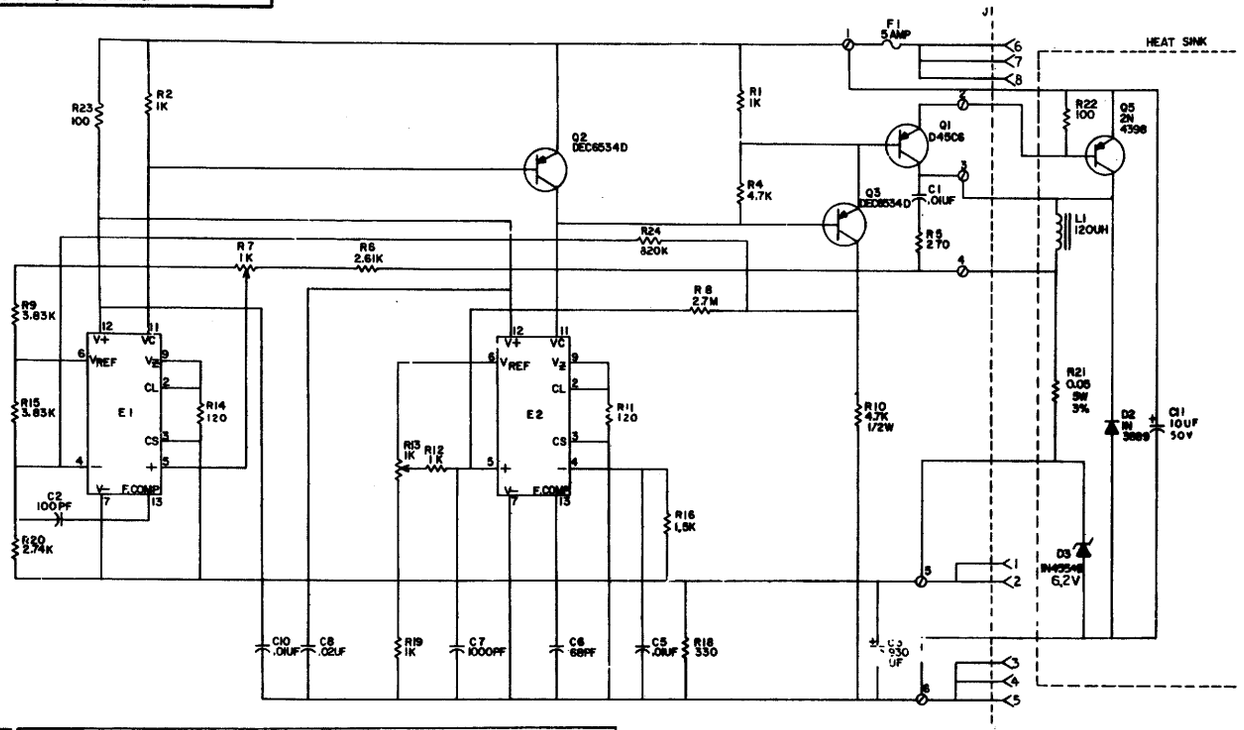

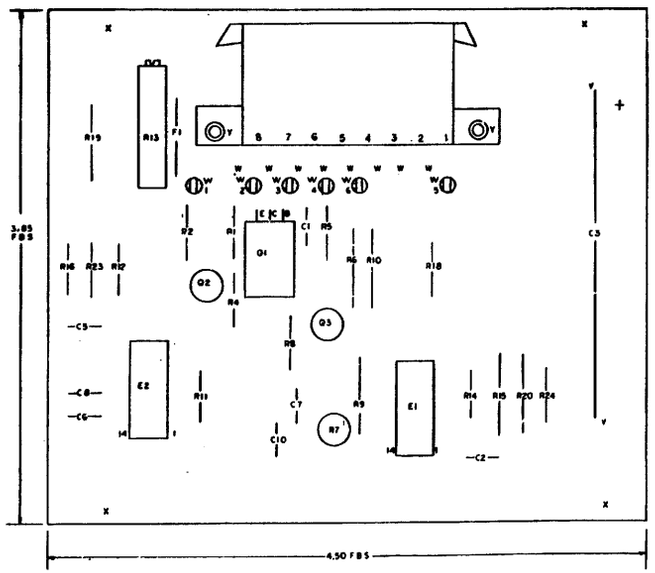

QTY	REF DESIGNATION	DESCRIPTION	PART NO.	ITEM NO.
A/R		WIRE #18AWG STRD (WHT.)	9107360-99	70
A/R		WIRE #18AWG STRD (GRY.)	9107360-88	69
A/R		WIRE #18AWG STRD (VIO.)	9107360-77	68
A/R		WIRE #18AWG STRD (BLU.)	9107360-66	67
A/R		WIRE #18AWG STRD (GRN.)	9107360-55	66
A/R		WIRE #18AWG STRD (YEL.)	9107360-44	65
1		3/16 FLAT WASHER	9006666	64
2		THERMAL INSULATOR	9009678	63
1		NUT, HEX 1/4 X28	9008063	62
2		WASHER, INT TOOTH LOCK #2	9006631	61
2		SOLDER LUG	9006764	60
1		1/4 FLAT WASHER	9006676	59
2		SCR BINDING HD 2-56 X 3/16 SST	9006000-4	58
2		SCR PHIL PAN HD 6-32 X 5/8 SST	9006025-1	57
1		SCR PHIL TRUSS HD 10-32 X 1 SST	9006077-3	56
1		WASHER INT TOOTH LOCK #10	9006635	55
2		BUSHING	9008441	54
1		SOLDER LUG	9008150	53
1		NUT, HEX #10-32	9006564	52
4		SCR PHL PAN HD #6-20 X 3/8 ST	9008407	51
1		THERMAL INSULATOR	9008419	50
2		THERMAL INSULATOR	9008424	49
2		TIE WRAPS	9007031	48
1		TRANSISTOR SOCKET	1210130	47
1	C11	CAP 10UF 50V	1000070	46
2	R22, R23	RES 100 1/4W 5%	1300229	45
1		HEAT SINK	D-IA-5309543-0-0	44
1	R21	RES 0.05 5W 3%	1310507	43
1	L1	CHOKE 120 UH	1610573	42
1	D2	DIODE IN3889	1110491	41
1	Q5	TRANSISTOR 2N4398	1505870	40
6		WASHER INT TOOTH #6	9006633	39
2	R11, R14	RES 120 1/4W 5%	1300247	38
1	R16	RES 1.5K 1/4W 5%	1300391	37
2		EYELETS	9006732	36
6		SPLIT LUGS	9006735	35
2		WASHER NYLON	9006707	34
2	E1, E2	IC 723C DIP REGULATOR	1910415	33
1	Q1	TRANSISTOR D45C6 G.E.	1510414	32
A/R		THERMAL COMPOUND	9008268	31
2	Q2, Q3	TRANSISTOR DEC6534D	1503409-00	30
1	R8	RES 2.7M 1/4W 5%	1309680	29
2	R9, R15	RES 3.83K 1/8W 1%	1309413	28
1	R7	RES 1K 1/2W 20%	1309150-3	27
1	R13	RES 1K 10W 76PR	1309143-07	26
1	R20	RES 2.74K 1/8W 1% MF	1304868	25
1	R6	RES 2.61K 1/8W 1% MF	1303302	24
1	R19	RES 1K 1/8W 1% MF	1303114	23
				22
1	R10	RES 4.7K 1/2W 5%	1300445	21
1	R5	RES 270 1/4W 5%	1301972	20
1	R4	RES 4.7K 1/4W 5%	1300447	19
3	R1, R2, R12	RES 1K 1/4W 5%	1300365	18
1	R18	RES 330 1/4W 5%	1300235	17
1	R24	RES 820K 1/4W 10%	1303187	16
8		CONNECTOR PIN	1209456	15
1	J1	CONN 8 PIN AMP.	1209340-00	14
1	F1	FUSE 5 AMPS	1209070	13
1	D3	DIODE IN4554B 6.2V	1112122	12
1	C8	CAP .02UF 100V -0+20% DISC	1000004	11
1	C3	CAP 930UF 30V -10+75% ELEC.	1010509	10
3	C1, C5, C10	CAP .01UF 100V 20% DISC	1001610	9
1	C7	CAP 1000PF 100V 5% MICA	1000042	8
1	C2	CAP 100PF 100V 5% DM	1000016	7
1	C6	CAP 68PF 100V 5% DM	1000014	6
1		ETCH CIRCUIT BOARD	5009502	5
		MODULE ECO HISTORY	B-MH-5409503-0-6	4
		ASSY/DRILLING HOLE LAYOUT	D-AH-5409503-0-5	3
		X-Y COORDINATE HOLE LOCATION	K-CO-5409503-0-4	2
		+5V REGULATOR	D-IA-5409503-0-0	1

PARTS LIST

TRANSISTOR & DIODE CONVERSION CHART

DEC	EIA	PRC	EIA
12345C	1N914	1N4148	
12346C		1N4150	
12347C			
12348C			

DRAWN S. Cooper DATE 6-2-71

TITLE 5 VOLT REGULATOR

DIGITAL EQUIPMENT CORPORATION MAYNARD, MASSACHUSETTS

SIZE D CODE CS NUMBER 5409503-0-1 REV R

PRINTED CIRCUIT REV.

Drawing and specifications, herein, are the property of Digital Equipment Corporation and shall not be loaned or copied or used in whole or in part as a basis for the manufacture or sale of items without written permission. 1975

WIRE TABLE

ITEM NO.	DESCRIPTION AWG	DESCRIPTION COLOR	LENGTH INCHES +-1/8	STRIP LENGTH X	STRIP LENGTH Y	CONNECTIONS FROM	CONNECTIONS TO
43	—	BLK	2 1/8	—	1/2	L1	D3-LUG (CATHODE)
43	—	BLK	2 1/8	—	1/2	L1	TS-2
65	18	BLU	2 1/4	1/2	1/2	Q4-C	D3-LUG (CATHODE)
67	18	GRY	3 5/8	1/2	1/2	Q4-E	R24-T2
64	18	GRN	4 1/2	1/2	1/2	D3-ANODE	TS-1
68	18	WHT	5 7/8	1/2	1/2	SPLIT LUG #1	R24-T1
67	18	GRY	4 7/8	1/2	1/2	#2	Q4-E
66	18	VIO	5 1/8	1/2	1/2	#3	Q4-B
65	18	BLU	5 1/8	1/2	1/2	#4	Q4-C
64	18	GRN	5 1/2	1/2	1/2	#6	TS-1
63	18	YEL	6 7/8	1/2	1/2	SPLIT LUG #5	TS-2

SEE NOTE 5

EXTERNAL COMPONENTS

ITEM NO.	LENGTH	DESCRIPTION	POL	CONNECTIONS FROM	CONNECTIONS TO	POL
45	SEE NOTE 2	RES 100Ω 1/4W 5%		Q4-E	Q4-B	
47	SEE NOTE 3	CAP 10uf 50V 10%	+	Q4-E	TS-1	−

NOTES:

1. R17 IS USED FOR OUTPUT VOLTAGE ADJUSTMENT. R2 IS USED FOR OUTPUT POWER ADJUSTMENT.
2. CUT LEADS OF RES. (R25) SO THERE IS 3/8" OF A LEAD LEFT AT BOTH ENDS. (3/8, R25)
3. CUT LEADS OF CAP. (C9) SO THERE IS 1/2 OF A LEAD LEFT AT BOTH ENDS. (1/2, C9)
4. THERMAL COMPOUND (ITEM #39) IS TO BE APPLIED TO BOTH SIDES OF ALL THERMAL INSULATORS (ITEM #50+51) BOTH SIDES OF EACH INSULATOR SHOULD BE COMPLETELY COVERED, LEAVING NO VOIDS WHEN INSTALLED. CARE MUST BE EXERCISED SO THAT NO EXTRA COMPOUND INTERFERES WITH ANY ELECTRICAL CONNECTION MADE TO ANY DEVICE.
5. WHEN ASSEMBLING THE WIRES FROM THE CIRCUIT BOARD TO THE HEAT SINK, PLACE THE MODULE AGAINST THE HEAT SINK. WIRE AS SHOWN BY THE WIRE LIST AND MAKE A SERVICE LOOP AT THE CONNECTIONS ON THE HEAT SINK TO TAKE UP ANY EXCESS WIRE THAT MIGHT BE AVAILABLE.

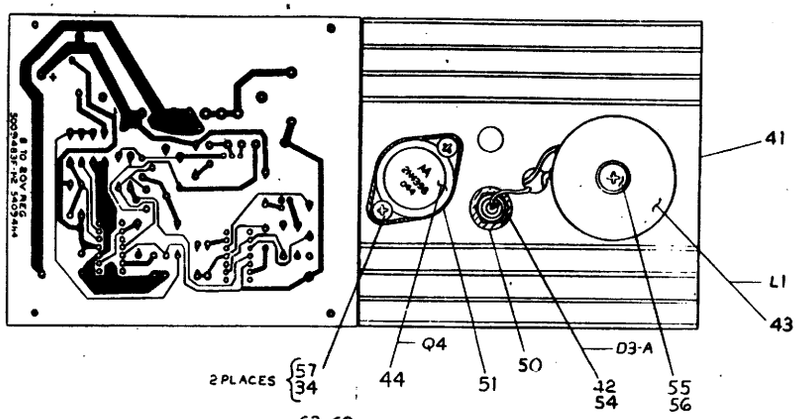

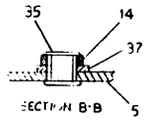

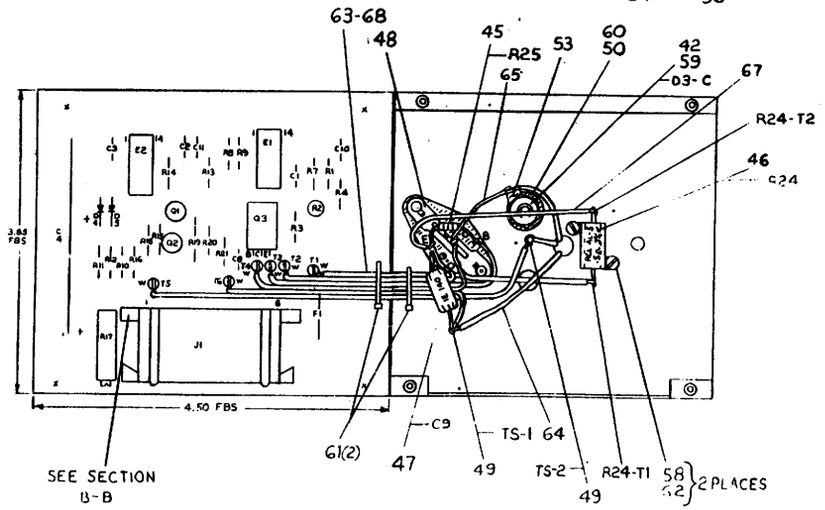

QTY	REF DESIGNATION	DESCRIPTION	PART NO.	ITEM NO.

PARTS LIST

ETCH BOARD REV

DEC NO.	EIA NO.	DEC NO.	EIA NO.

SEMICONDUCTOR CONVERSION CHART

REVISED & REDRAWN 54C 9484-CCCC7 K — J. RINALDIS

		DATE
DRN.	T. QUILLIN	7SEP71
CHK'D.	J. FLEMING	8SEP71
ENG.	P. SVENDSEN	8SEP71
PROJ. ENG.	P. SVENDSEN	8SEP71
PROD.	P. FAZIO	9OCT71

NEXT HIGHER ASSY: D-UA-H737-0-0

SCALE: NONE

SHEET 1 OF 1

[redacted] EQUIPMENT CORPORATION, MAYNARD, MASSACHUSETTS

TITLE: 8 TO 20V REGULATOR

SIZE D | CODE IA | NUMBER 5409484-0-0 | REV. K

DIST.

DE FORM NO DE-135

THIS DRAWING AND SPECIFICATIONS, HEREIN, ARE THE PROPERTY OF DIGITAL EQUIPMENT CORPORATION AND SHALL NOT BE REPRODUCED OR COPIED OR USED IN WHOLE OR IN PART AS THE BASIS FOR THE MANUFACTURE OR SALE OF ITEMS WITHOUT WRITTEN PERMISSION. COPYRIGHT © 1969 DIGITAL EQUIPMENT CORPORATION

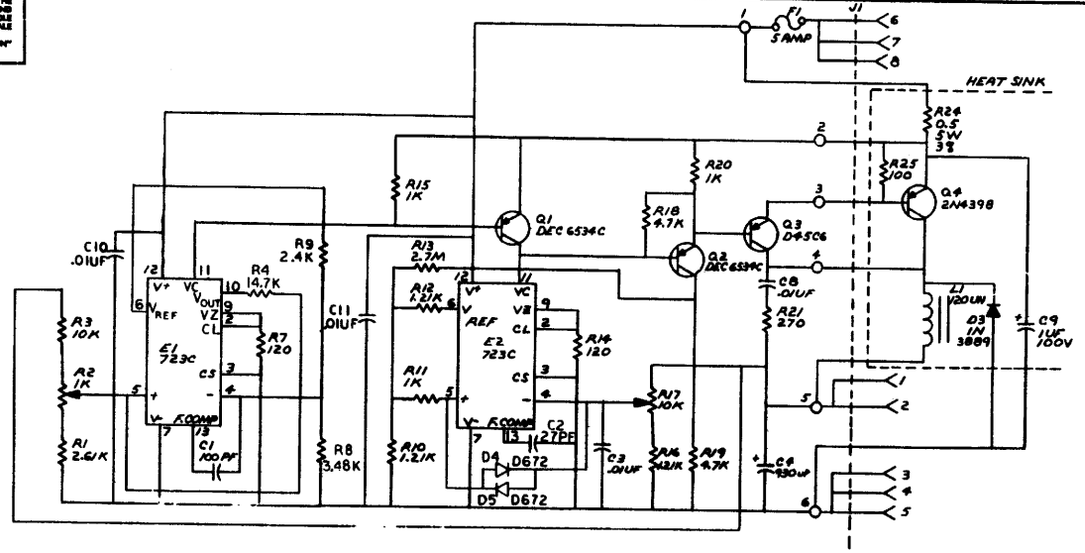

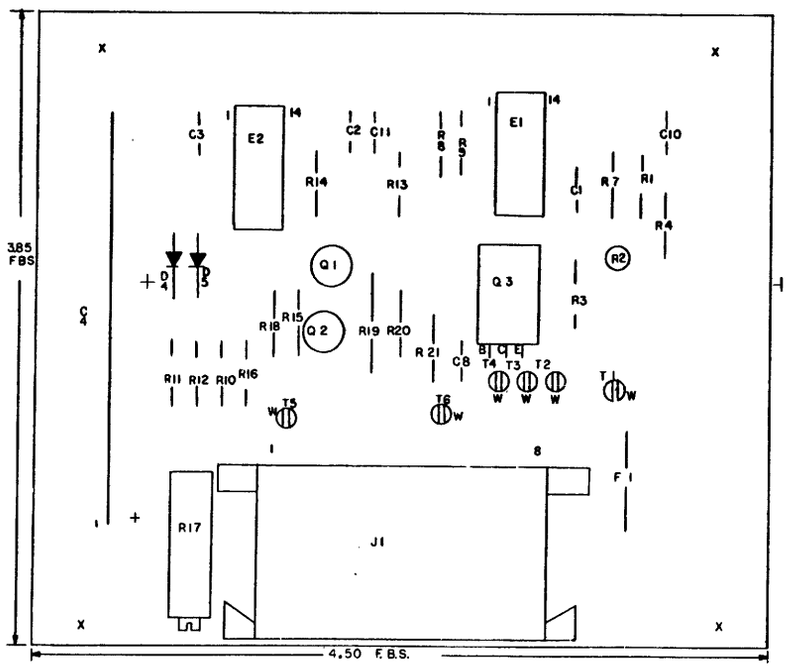

QTY	REF DESIGNATION	DESCRIPTION	PART NO.	
4		WASHER, LOCK SPRING	9007801	69
A/R		WIRE #18 AWG STRD (WHT)	9107360-99	68
A/R		WIRE #18 AWG STRD (GRY)	9107360-88	67
A/R		WIRE #18 AWG STRD (VIO)	9107360-77	66
A/R		WIRE #18 AWG STRD (BLU)	9107360-66	65
A/R		WIRE #18 AWG STRD (GRN)	9107360-55	64
A/R		WIRE #18 AWG STRD (YEL)	9107360-44	63
2		#2 INTERNAL LOCK WASHER	9006631	62
2		TIE WRAPS	9007031	61
1		WASHER FLAT 3/16	9006666	60
1		#10-32 HEX NUT	9006564	59
2		2/56 x 3/16" SCREW	9006000-4	58
2		6/32 x 3/8" PAN HD SCREW	9006023-1	57
1		10-32 x 1" TRUSS HD SCREW	9006077-3	56
1		#10 INTERNAL LOCK WASHER	9006635	55
1		BUSHING (DIODE)	9008441	54
1		SOLDER LUG	9008150	53
4		#6-20 x 3/8 SELF TAPPING SCREW	9008407-01	52
1		THERMAL INSULATOR	9008619	51
2		THERMAL INSULATOR	9008424	50
2	TS-1, TS-2	STAND OFF (STUD TYPE)	9009060	49
1		TRANSISTOR SOCKET	1210130	48
1	C9	CAP 1UF 100V	1003507	47
1	R24	RES. 0.5 3% 5W	1310508	46
1	R25	RES. 100 5% 1/4W	1300229	45
1	Q4	TRANSISTOR 2N4398	1505870	44
1	L1	120UH CHOKE	1610573	43
1	D3	DIODE 1N3889	1110491	42
1		HEAT SINK	D-IA-5509519-0-0	41
6		SPLIT LUGS	9006735	40
A/R		THERMAL COMPOUND	9008268	39
1	F1	FUSE 5 AMPS	1209070	38
2		WASHER NYLON	9006707	37
8		CONNECTOR PINS	1209456	36
2		EYELET	9006732	35
2		WASHER INT TOOTH #6	9006633	34
2	E1,2	DIP REGULATOR 723C	1910415	33
1	Q3	TRANSISTOR D4506	1510414	32
2	Q1,2	TRANSISTOR DEC 6534C	1503409-02	31
				30
1	R21	RES. 270 1/4W 5%	1301372	29
1	R19	RES. 4.7K 1/2 W 5%	1300445	28
1	R18	RES. 4.7K 1/4W 5%	1300447	27
1	R17	RES. VARIABLE 10K 3/4 W 10%	1309763-10	26
1	R13	RES 2.7M 1/4 W 5%	1309680	25
3	R11,15,20	RES 1K 1/4 W 5%	1300365	24
3	R10,12,16	RES 1.21K 1/8W 1% MF	1302871	23
1	R8	RES 3.48K 1/8W 1% MF	1305114	22
2	R7,14	RES 120 1/4 W 5%	1300247	21
				20
1	R9	RES 2.4K 1/4W 5%	1303177	19
1	R4	RES 14.7K 1/8 W 1% MF	1302941	18
1	R3	RES 10K 1/8W 1% MF	1303312	17
1	R2	RES VARIABLE 1K 1/2 W	1309150-03	16
1	R1	RES 2.61K 1/8W 1% MF	1303303	15
1	J1	AMP 8 PIN CONNECTOR (MATE-LOC)	1209340-00	14
2	D4, D5	DIODE D672	1105275	13
				12
				11
				10
1	C4	CAP. 930UF 30V, -10 +75%	1010509	9
4	C3, 8, 10, 11	CAP. .01UF 100V 20% AXIAL	1001610	8
1	C2	CAP 27 PF 100 V 5% MICA	1001739	7
1	C1	CAP 100PF 100V 5% D.M.	1000016	6
1		ETCHED CIRCUIT BOARD	5009483	5
		MODULE ECO HISTORY	B-MH-5409484-06	4
		ASSY DRILLING HOLE LAYOUT	D-AH-5409484-0-5	3
		X-Y COORDINATE HOLE LOCATION	K-CO-5409484-0-4	2
		8 TO 20 V REGULATOR	E-IA-5409484-0-0	1

REVISIONS				
CHANGE NO.	REV.	5409484-00006 J	5409484-00007 K	
00005	11	J. RINALDIS	J. RINALDIS	J. RINALDIS

DWN		3-11-72
CHK'D		3/15/72
ENG		4/3/72
MFG		11/4/72

TITLE: 8 TO 20V REGULATOR

SIZE: D | CODE: CS | NUMBER: 5409484-0-1 | REV.: K

SCALE | SHEET 1 OF 1 | DIST. F

RUN NAME	A/P	PIN NAME	ORDER PIN	BAY = ORDER	Q	DRAW OPT	PV RG Y	X	Z	REMARKS	NC LENGTH EXCEPTIONS FLAG	RUN NUMBER
+15VDC	H	A05D2		1-01 *			D05-9		1		0-4/8	1
+15VDC	H	A06D1		1-02 *			D05-9					1
+15VDC	H			1							0-4/8	1
+5VDC BULB	H	B06A1		1-01 *			D05-9		1		0-4/8	2
+5VDC BULB	H	B06A2		1-02 *			D05-9					2
+5VDC BULB	H			1							0-4/8	2
12B	H	A01H2		1-01 *			D05-1		1		2-5/8	3
12B	H	B03A1		1-02 *			D05-1					3
12B	H			1							2-5/8	3
AC LOW	H	A04R2		1-01 *			D05-8		1		2-7/8	4
AC LOW	H	B08F1		1-02 *			D05-8		2		1	4
AC LOW	H	B07F1		1-03 *			D05-8					4
AC LOW	H			1							3-7/8	4
ADDR ACCEPTED	L	A02S1		1-01 *			D05-5		1		1-2/8	5
ADDR ACCEPTED	L	A03N1		1-02 *			D05-5					5
ADDR ACCEPTED	L			1							1-2/8	5
ADDRESS INVALID	L	B02F1		1-01 *			D05-2		1		0-5/8	6
ADDRESS INVALID	L	B03E1		1-02 *			D05-2					6
ADDRESS INVALID	L			1							0-5/8	6
BLOWER MTR RELAY DR	H	A04A1		1-01 *			D05-9		1		5-5/8	7
BLOWER MTR RELAY DR	H	B06N1		1-02 *			D05-9					7
BLOWER MTR RELAY DR	H			1							5-5/8	7
BUS ADDR ACCEPTED	L	A02R1		1-01 *			D05-4		1		3-2/8	8
BUS ADDR ACCEPTED	L	A07R2		1-02 *			D05-4		2		1	8
BUS ADDR ACCEPTED	L	A08R2		1-03 *			D05-4					8
BUS ADDR ACCEPTED	L			1							4-2/8	8
BUS ADDR INVALID	L	A08T2		1-01 *			D05-4		2		1	9
BUS ADDR INVALID	L	A07T2		1-02 *			D05-4		1		4-1/8	9
BUS ADDR INVALID	L	B02A1		1-03 *			D05-4					9
BUS ADDR INVALID	L			1							5-1/8	9
BUS FILE READY	L	A04M1		1-01 *			D05-7		1		4-6/8	10
BUS FILE READY	L	B08N1		1-02 *			D05-7		2		1	10
BUS FILE READY	L	B07N1		1-03 *			D05-7					10
BUS FILE READY	L			1							5-6/8	10
BUS INDEX PUL	L	A02K1		1-01 *			D05-3		1		4-6/8	11
BUS INDEX PUL	L	B08M1		1-02 *			D05-3		2		1	11
BUS INDEX PUL	L	B07M1		1-03 *			D05-3					11
BUS INDEX PUL	L			1							5-6/8	11
BUS R/W/S READY	L	A02H1		1-01 *			D05-4		1		3-5/8	12
BUS R/W/S READY	L	B07H2		1-02 *			D05-4		2		1	12
BUS R/W/S READY	L	A08H2		1-03 *			D05-4					12
BUS R/W/S READY	L			1							4-5/8	12

RUN NAME	A/P	PIN NAME	ORDER PIN	BAY = ORDER	Q	DRAW OPT	PV RG Y	X	Z	REMARKS	NC LENGTH EXCEPTIONS FLAG	RUN NUMBER
BUS SECTOR ADDR	L	A02H1		1-01 *			D05-3		1		4-7/8	13
BUS SECTOR ADDR	L	B08H1		1-02 *			D05-3		2		1	13
BUS SECTOR ADDR	L	B07L1		1-03 *			D05-3					13
BUS SECTOR ADDR	L			1							5-7/8	13
BUS SECTOR ADDR 1	L	A02J1		1-01 *			D05-4		1		3-5/8	14
BUS SECTOR ADDR 1	L	A07P2		1-02 *			D05-4		2		1	14
BUS SECTOR ADDR 1	L	A08P2		1-03 *			D05-4					14
BUS SECTOR ADDR 1	L			1							4-5/8	14
BUS SECTOR ADDR 2	L	A02L1		1-01 *			D05-4		1		4-1/8	15
BUS SECTOR ADDR 2	L	B07K2		1-02 *					2		1	15
BUS SECTOR ADDR 2	L	B08K2		1-03 *			D05-4					15
BUS SECTOR ADDR 2	L			1							5-1/8	15
BUS SECTOR ADDR 3	L	A02P1		1-01 *			D05-4		1		4-1/8	16
BUS SECTOR ADDR 3	L	B07J1		1-02 *			D05-4		2		1	16
BUS SECTOR ADDR 3	L	B08J1		1-03 *			D05-4					16
BUS SECTOR ADDR 3	L			1							5-1/8	16
BUS SECTOR PULSE	L	A02F1		1-01 *			D05-3		1		5-2/8	17
BUS SECTOR PULSE	L	B08N2		1-02 *			D05-3		2		1	17
BUS SECTOR PULSE	L	B07N2		1-03 *			D05-3					17
BUS SECTOR PULSE	L			1							6-2/8	17
BUS SEEK INCOMPLETE	L	A02N1		1-01 *			D05-4		1		3-3/8	18
BUS SEEK INCOMPLETE	L	A07S2		1-02 *			D05-4		2		1	18
BUS SEEK INCOMPLETE	L	A08S2		1-03 *			D05-4					18
BUS SEEK INCOMPLETE	L			1							4-3/8	18
BUS WR PROTECT STATUS	H	B04U1		1-01 *			D05-8		1		2-3/8	19
BUS WR PROTECT STATUS	H	B07P1		1-02 *			D05-8		2		1	19
BUS WR PROTECT STATUS	H	B08F1		1-03 *			D05-8					19
BUS WR PROTECT STATUS	H			1							3-3/8	19
BUS WRITE CK	H	B04F1		1-01 *			D05-8		1		2-3/8	20
BUS WRITE CK	H	B07N1		1-02 *			D05-8		2		1	20
BUS WRITE CK	H	B08K1		1-03 *			D05-8					20
BUS WRITE CK	H			1							3-3/8	20
COS POSITION	H	A05U1		1-01 *			D05-9		1		1-5/8	21
COS POSITION	H	B08R1		1-02 *			D05-9					21
COS POSITION	H			1							1-5/8	21
COUNT PULSE FWD	H	A05A1		1-01 *			D05-5		1		5-1/8	22
COUNT PULSE FWD	H	B03N1		1-02 *			D05-5					22
COUNT PULSE FWD	H			1							5-1/8	22
COUNT PULSE REV	H	A05C1		1-01 *			D05-5		1		4-3/8	23
COUNT PULSE REV	H	B03F1		1-02 *			D05-5					23
COUNT PULSE REV	H			1							4-3/8	23
CYC ADDR 0	L	A07K1		1-01 *			D05-5		2		1	24
CYC ADDR 0	L	B08N1		1-02 *			D05-5		1		4-4/8	24
CYC ADDR 0	L	B08L1		1-03 *			D05-5					24
CYC ADDR 0	L			1							5-4/8	24

RUN NAME	A/P	PIN NAME	ORDER PIN	RAY = ORDER	Q	DRAW	RV RG Y OPT	X	Z	REMARKS	NC LENGTH EXCEPTIONS FLAG	RUN NUMBER
SELECT 3	L	A08L2		1=A1 *			D05=3		2		1	91
SELECT 3	L	A07L2		1=A2 *			D05=3		1		5=7/8	91
SELECT 3	L	A02T2		1=A3 *			D05=3					91
SELECT 3	L			1							6=7/8	91
SELECT 4	L	A08M2		1=A1 *			D05=3		2		1	92
SELECT 4	L	A07M2		1=A2 *			D05=3		1		5	92
SELECT 4	L	A02U2		1=A3 *			D05=3					92
SELECT 4	L			1							6=8/8	92
SELECT/READY	L	A01H2		1=A1 *			D05=1		1		2=3/8	93
SELECT/READY	L	A04V1		1=A2 *					2		2=2/8	93
SELECT/READY	L	A02H1		1=A3 *			D05=1					93
SELECT/READY	L			1							4=5/8	93
SELECTED READ GATE	H	A01R1		1=A1 *			D05=9		1		1=3/8	94
SELECTED READ GATE	H	A02F2		1=A2 *			D05=9					94
SELECTED READ GATE	H			1							1=3/8	94
SELECTED WRITE GATE	H	A01V1		1=A1 *			D05=1		1		1=2 3	95
SELECTED WRITE GATE	H	A02V2		1=A2 *			D05=1					95
SELECTED WRITE GATE	H			1							1=2/8	95
SET UNSAFE	L	A01U2		1=A1 *			D05=1		1		2=2/8	96
SET UNSAFE	L	A04A1		1=A2 *			D05=1					96
SET UNSAFE	L			1							2=2/8	96
SIN POSITION	H	A05N1		1=A1 *			D05=9		1		2=5/8	97
SIN POSITION	H	B06D1		1=A2 *			D05=9					97
SIN POSITION	H			1							2=5/8	97
STROBE	L	A02V1		1=A1 *			D05=2		1		4=1/8	98
STROBE	L	A07H1		1=A2 *			D05=2		2		1	98
STROBE	L	A08H1		1=A3 *			D05=2					98
STROBE	L			1							5=1/8	98
UNSAFE	L	A01L2		1=A1 *			D05=1		1		2=5/8	99
UNSAFE	L	A04V2		1=A2 *			D05=1					99
UNSAFE	L			1							2=5/8	99
WRITE DATA + CLK	H	A01J1		1=A1 *			D05=1		1		3=7/8	100
WRITE DATA + CLK	H	A07F2		1=A2 *			D05=1		2		1	100
WRITE DATA + CLK	H	A08F2		1=A3 *			D05=1					100
WRITE DATA + CLK	H			1							4=7/8	100
WRITE GATE	L	A01J2		1=A1 *			D05=1		1		4=6/8	101
WRITE GATE	L	A07L2		1=A2 *			D05=1		2		1	101
WRITE GATE	L	A08L2		1=A3 *			D05=1					101
WRITE GATE	L			1							5=6/8	101
WRITE PROTECT SET	L	A02S1		1=A1 *			D05=3		1		3=3/8	102
WRITE PROTECT SET	L	A07R2		1=A2 *			D05=3		2		1	102
WRITE PROTECT SET	L	A08R2		1=A3 *			D05=3					102
WRITE PROTECT SET	L			1							4=3/8	102

RUN NAME	A/P	PIN NAME	ORDER PIN	RAY = ORDER	Q	DRAW	RV RG Y OPT	X	Z	REMARKS	NC LENGTH EXCEPTIONS FLAG	RUN NUMBER
WRITE SX OFF	L	A06N1		1=A1 *			D05=7		1		3=3/8	103
WRITE SX OFF	L	A04F1		1=A2 *			D05=7					103
WRITE SX OFF	L			1							3=3/8	103
WRITE SX ON	L	A06M1		1=A1 *			D05=7		1		3=3/8	104
WRITE SX ON	L	A04F1		1=A2 *			D05=7					104
WRITE SX ON	L			1							3=3/8	104
WRITING IND	H	A02D1		1=A1 *			D05=5		1		3=2/8	105
WRITING IND	H	A06F1		1=A2 *			D05=5					105
WRITING IND	H			1							3=2/8	105

RUN NAME	A/P	PT NAME	ORDER PIN	RAY - ORDER	Q	DRAW OPT	RV RG Y	X	Z	REMARKS	NC LENGTH EXCEPTIONS FLAG	RUN NUMBER
GND 06		A06C2		1-01 *					1		2-1/8	47
GND 06		A06T1		1-02 *					2		1-5/8	47
GND 06		R06C2		1-03 *		D25-9			1		0-4/8	47
GND 06		R06C1		1-04 *		D25-9			2		0-4/8	47
GND 06		R06E1		1-05 *		D25-9			1		0-5/8	47
GND 06		R06J1		1-06 *		D25-9			2		1-4/8	47
GND 06		R06T1		1-07 *		D25-9			1		0-1/8	47
GND 06		R06S1		1-08 *		D25-9						47
GND 06				1							7-0/6	47
GND 07		A07R2		1-01 *					1		0-1/8	48
GND 07		A07C2		1-02 *					2		1-5/8	48
GND 07		A07N1		1-03 *					1		0-1/8	48
GND 07		A07F1		1-04 *					2		0-1/8	48
GND 07		A07R1		1-05 *					1		0-1/8	48
GND 07		R07S1		1-06 *					2		0-1/8	48
GND 07		A07T1		1-07 *					1		0-4/8	48
GND 07		A07V1		1-08 *					2		1-3/8	48
GND 07		R07R2		1-09 *					1		0-1/8	48
GND 07		R07C2		1-10 *					2		0-1/8	48
GND 07		R07D1		1-11 *					1		0-1/8	48
GND 07		R07E1		1-12 *					2		1-7/8	48
GND 07		R07T1		1-13 *					1		0-4/8	48
GND 07		R07V2		1-14 *								48
GND 07				1							6-7/8	48
GND 08		A08R2		1-01 *					1		0-1/8	49
GND 08		A08C2		1-02 *					2		1-5/8	49
GND 08		A08N1		1-03 *					1		0-1/8	49
GND 08		A08P1		1-04 *					2		0-1/8	49
GND 08		A08R1		1-05 *					1		0-1/8	49
GND 08		R08S1		1-06 *					2		0-1/8	49
GND 08		A08T1		1-07 *					1		0-4/8	49
GND 08		A08V1		1-08 *					2		1-3/8	49
GND 08		R08R2		1-09 *					1		0-1/8	49
GND 08		R08C2		1-10 *					2		0-1/8	49
GND 08		R08D1		1-11 *					1		0-1/8	49
GND 08		R08E1		1-12 *					2		1-7/8	49
GND 08		R08T1		1-13 *					1		0-4/8	49
GND 08		R08V2		1-14 *								49
GND 08				1							6-7/8	49
GOOD STROBE	L	R02F1		1-01 *		D25-5			1		1-1/8	50
GOOD STROBE	L	R03D1		1-02 *		D25-5						50
GOOD STROBE	L			1							1-1/8	50
HEAD SELECT	L	A01P1		1-01 *		D25-1			1		5-2/8	51
HEAD SELECT	L	R07M2		1-02 *		D25-1			2		1	51
HEAD SELECT	L	R08H2		1-03 *		D25-1						51
HEAD SELECT	L			1							6-2/8	51
HIGH DENSITY	L	A01R2		1-01 *		D25-4			1		4-3/8	52
HIGH DENSITY	L	R07P2		1-02 *		D25-4			2		1	52
HIGH DENSITY	L	R06P2		1-03 *		D25-4						52
HIGH DENSITY	L			1							5-3/8	52

RUN NAME	A/P	PIN NAME	ORDER PIN	RAY - ORDER	Q	DRAW OPT	RV RG Y	X	Z	REMARKS	NC LENGTH EXCEPTIONS FLAG	RUN NUMBER
HOME	L	A04R1		1-01 *		D25-7			2		2-1/8	53
HOME	L	R03R1		1-02 *		D25-7			1		2-3/8	53
HOME	L	R06F1		1-03 *		D25-7						53
HOME	L			1							3-4/8	53
INDEX PULSE	L	A02F2		1-01 *		D25-3			1		1-4/8	54
INDEX PULSE	L	A04J1		1-02 *		D25-3						54
INDEX PULSE	L			1							1-4/8	54
INDEX/SECTOR	L	R02D1		1-01 *		D25-5			1		1-7/8	55
INDEX/SECTOR	L	R04H2		1-02 *		D25-5						55
INDEX/SECTOR	L			1							1-7/8	55
INNER LIMIT	H	A05R1		1-01 *		D25-2			1		3-3/8	56
INNER LIMIT	H	A03U1		1-02 *		D25-2			2		2-3/8	56
INNER LIMIT	H	R02J1		1-03 *		D25-2						56
INNER LIMIT	H			1							5-6/8	56
INTERLOCK	L	A04H1		1-01 *		D25-7			1		1-7/8	57
INTERLOCK	L	A06R1		1-02 *		D25-7						57
INTERLOCK	L			1							1-7/8	57
LIMIT	H	A05K1		1-01 *		D25-9			1		3-3/8	58
LIMIT	H	R06H1		1-02 *		D25-9						58
LIMIT	H			1							3-3/8	58
LOAD HEADS	L	R03C1		1-01 *		D25-6			1		1	59
LOAD HEADS	L	R04C1		1-02 *		D25-6						59
LOAD HEADS	L			1							1-0/6	59
LOAD IND	H	A03T1		1-01 *		D25-4			1		1-7/8	60
LOAD IND	H	A06A1		1-02 *		D25-4						60
LOAD IND	H			1							1-7/8	60
LOAD SW	L	A06K1		1-01 *		D25-7			1		3-3/8	61
LOAD SW	L	R04D1		1-02 *		D25-7						61
LOAD SW	L			1							3-3/8	61
MOVE	I	A03L1		1-01 *		D25-2			1		4-1/8	62
MOVE	I	R02P1		1-02 *		D25-2						62
MOVE	I			1							4-1/8	62
NO PROTECT	L	A01N2		1-01 *		D25-1			1		3-5/8	63
NO PROTECT	L	R04M1		1-02 *		D25-1						63
NO PROTECT	L			1							3-5/8	63
ODD DRIVE	L	A02J2		1-01 *					1		3-3/8	64
ODD DRIVE	L	R03F2		1-02 *								64
ODD DRIVE	L			1							3-3/8	64
ON	L	A02A1		1-01 *		D25-5			1		2-1/8	65
ON	L	A03M1		1-02 *		D25-5						65
ON	L			1							2-1/8	65