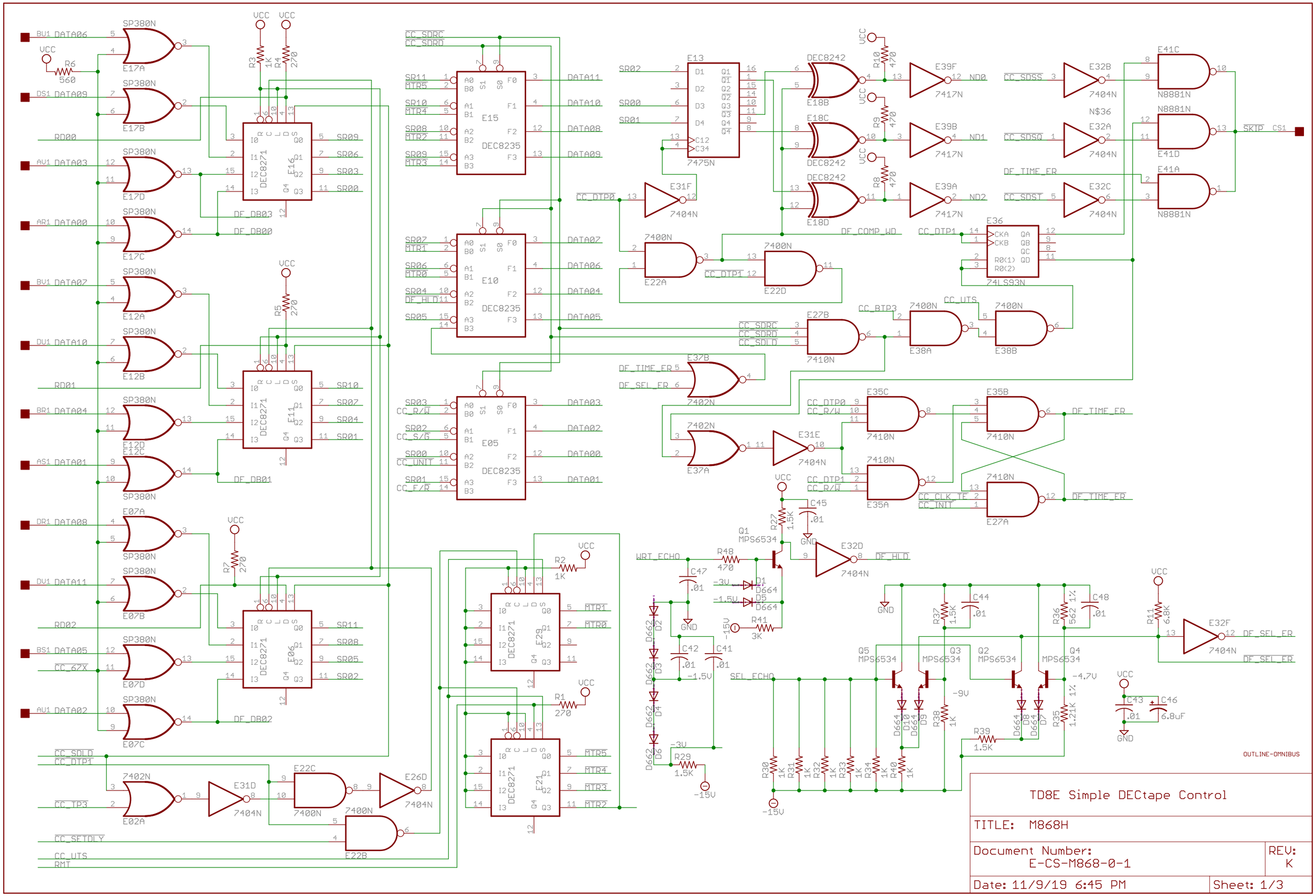
TD8E Simple DECtape Control
TITLE: M868H
Document Number: E-CS-M868-0-1
REV: K
Date: 11/9/19 6:45 PM
Sheet: 1/3
OUTLINE-OMNIBUS

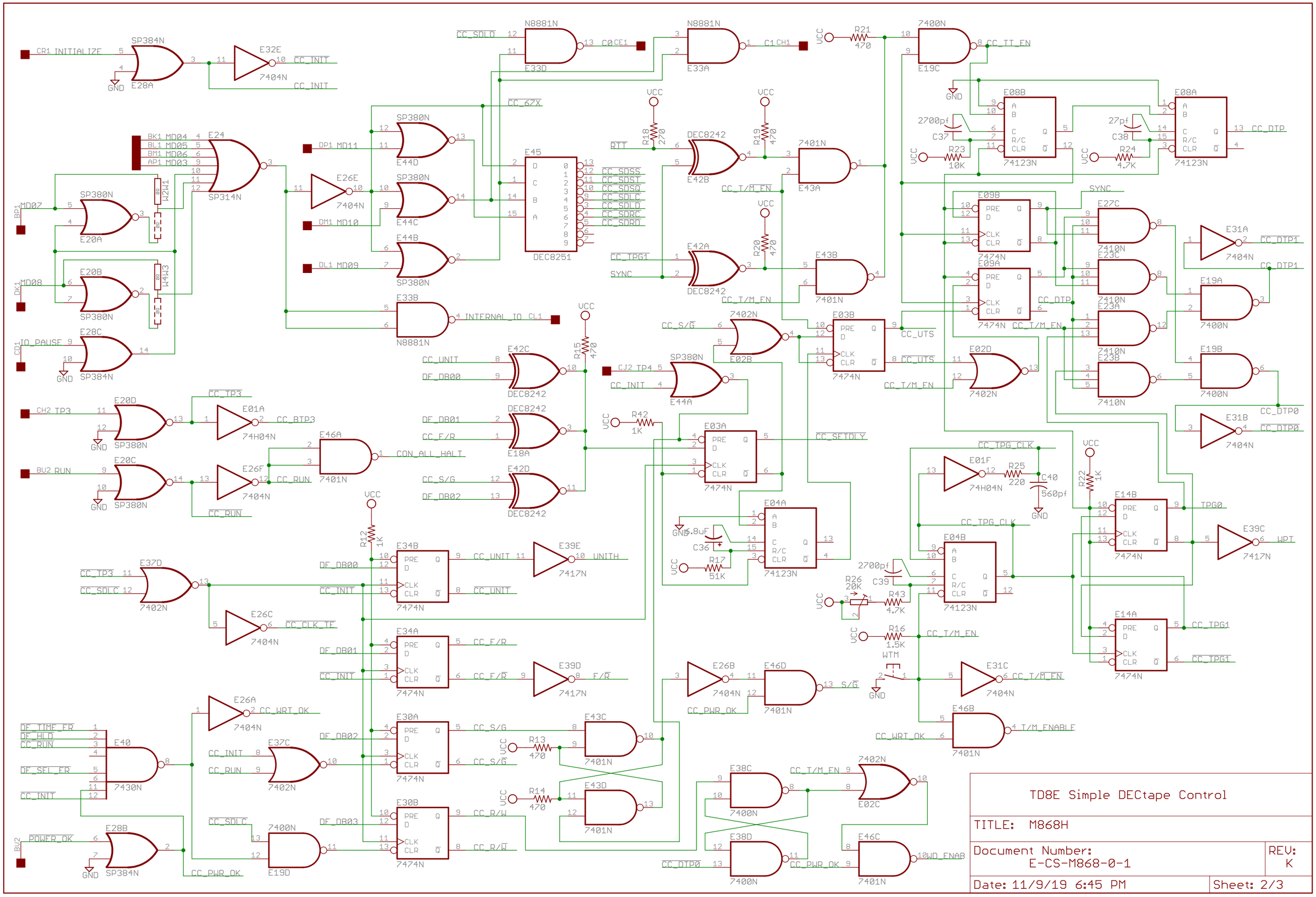
TD8E Simple DECtape Control
TITLE: M868H
Document Number: E-CS-M868-0-1
REV: K
Date: 11/9/19 6:45 PM
Sheet: 2/3

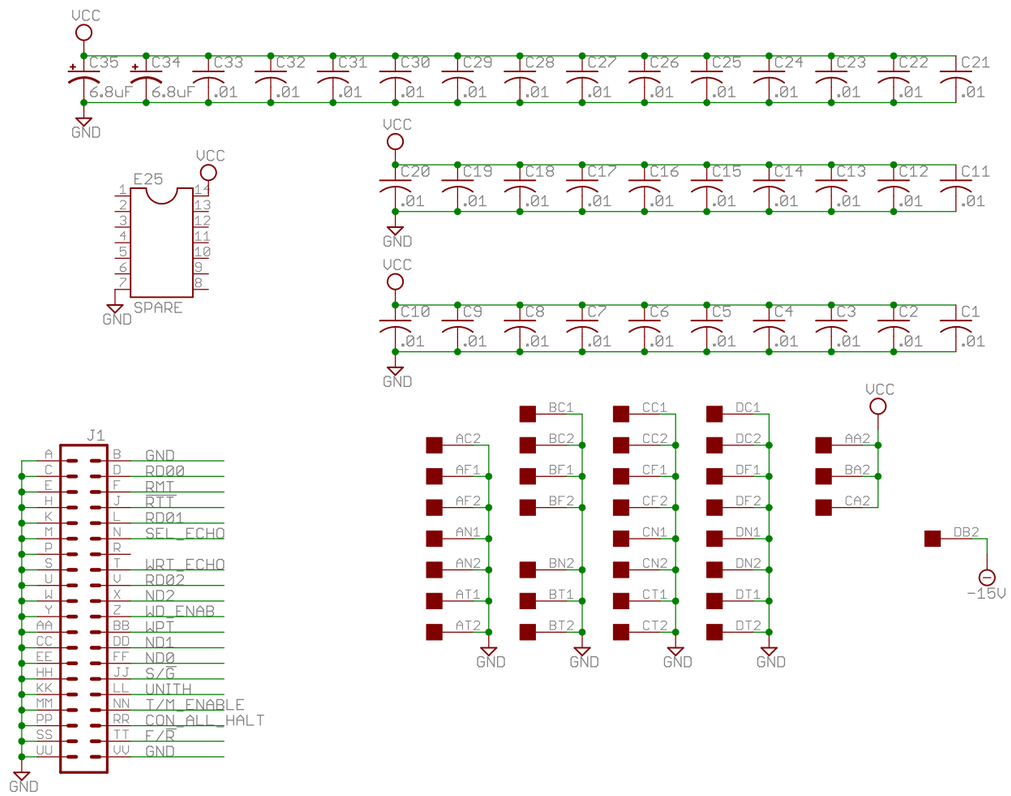

TD8E Simple DECtape Control	
TITLE: M868H	
Document Number: E-CS-M868-0-1	REV: K
Date: 11/9/19 6:45 PM	Sheet: 3/3