This drawing and specifications, herein, are the property of Digital Equipment Corporation and shall not be reproduced or copied or used in whole or in part as the basis for the manufacture or sale of items without written permission.

PARTS REFERENCE

ITEM NO	DRAWING REFERENCE	DESCRIPTION		PART NUMBER	QUANTITY
1	E1,E9,E18	DEC 74H53N	IC	1909062	3
2	E2,E5,E19,E21,E25,E27,E31,E36,E39,E45,E47	DEC 7402N	IC	1909004	11
3	E3,E28,E34,E40,E42	DEC 8815A	IC	1909713	5
4	E4,E10,E11,E16,E22,E24,E26,E37,E44,E49	DEC 7400N	IC	1905575	10
5	E6,E32	DEC 7420N	IC	1905577	2
6	E7,E17	DEC 74H60N	IC	1909064	2
7	E8,E29	DEC 7450N	IC	1905580	2
8	E12,E13,E14,E30,E35	DEC 7460N	IC	905581	5
9	E15	DEC 7453N	IC	1905582	1
10	E33,E48	DEC 7410N	IC	1905576	2
11	E38	DEC 7474N	IC	1905547	1
12	E41	DEC 380	IC	1909485	1
13	E43	DEC 8601	IC	1909487	1
14	E46	DEC 8881	IC	1909705	1
15	C1-C39,C41,C43,C45-C47,C49-C51,C56	.01 MFD, 100V, 20%	CAP	100160	48
16	C40	1000 MMF, 100V, 5%	CAP	100344	1
17	C42	68 MMF, 100V, 5%	CAP	100014	1
18	C44,C48	330 MMF, 100V, 5%	CAP	100023	2
19	C52-C55	6.8 MFD 35V, 20%	CAP	100067	4
20	R1,R6	47, 1/4 W, 5%	RES	1300202	2
21	R2	5.6 K, 1/4W, 5%	RES	1301874	1
22	R3,R7	470, 1/4W, 5%	RES	1300316	2
23	R4	220, 1/4W, 5%	RES	1300271	1
24	R5	1000, 1/4W, 5%	RES	1300365	1
25	D1	D664 DIODE		1100114	1

NOTES:

1. PIN NOTATION THROUGHOUT IS ORDERED UPON MODULE PLACEMENT IN THE KA11 PROCESSOR. MODULE REFERENCE ALONE IS OBTAINED BY DELETING THE NUMBER (SLOT LOCATION) AFTER THE FIRST LETTER, AND CONVERTING THE FIRST LETTER ACCORDING TO THE PIN NOMENCLATURE CHART AT RIGHT.
2. ALL SIGNALS THAT HAVE MODULE PINS ARE SO NOTED; MULTIPLE NOTATIONS OF THE SAME SIGNALS WITHIN A MODULE HAVE THE PIN NOTED ON EACH. AN INPUT SIGNAL IS NOTED ONLY ONCE PER SHEET UNLESS SEPERATE PINS ARE USED; MULTIPLE INPUTS ARE CONNECTED. MODULE OUTPUT SIGNALS ARE BROUGHT TO THE EXTREME RIGHT OF EACH SHEET.
3. PROCESSOR SIGNAL SOURCE NOTATION (K10-2, FOR EXAMPLE) IDENTIFIES THE SIGNAL SOURCE (PRINT AND MODULE). THE FIRST NUMBER AFTER THE K INDICATES THE MODULE PRINT SET, WHILE THE SECOND INDICATES THE SHEET WITHIN THE SET. IF ON A PRINT, THE FIRST NUMBER OF THE K PREFIXES COINCIDE FOR A SIGNAL NAME AND THE PRINT (SEE TITLE BLOCK), THE SIGNAL IS GENERATED ON THE MODULE. A DIFFERENCE IN THE FIRST NUMBER OF THE K PREFIXES INDICATES A SIGNAL GENERATED OFF THE MODULE. SIGNALS WITH A "BUS" PREFIX REPRESENT A "WIRED OR" SITUATION, AND MULTIPLE SOURCES FOR THE SIGNAL CAN EXIST.
4. DETAILS ON COMPONENTS ARE NOTED IN THE PARTS REFERENCE, PLACEMENT IS NOTED IN THE COMPONENT PLACEMENT DIAGRAM.
5. GND AND +5V ARE USUALLY PIN 7 AND PIN 14, RESPECTIVELY. EXCEPTIONS ARE:

IC TYPE	GND	+5V
DEC 7481	PIN 10	PIN 4
DEC 7482	PIN 11	PIN 4
8251	PIN 8	PIN 16
DEC 8271	PIN 8	PIN 16
DEC 380	PIN 1	PIN 8
DEC 384	PIN 1	PIN 8

6. UNLESS OTHERWISE NOTED: RESISTANCE IS IN OHMS; CAPACITANCE IS IN PICOFARADS. CAPACITORS WITHOUT ANY NOTED VALUES ARE .01 MFD.

COMPONENT PLACEMENT

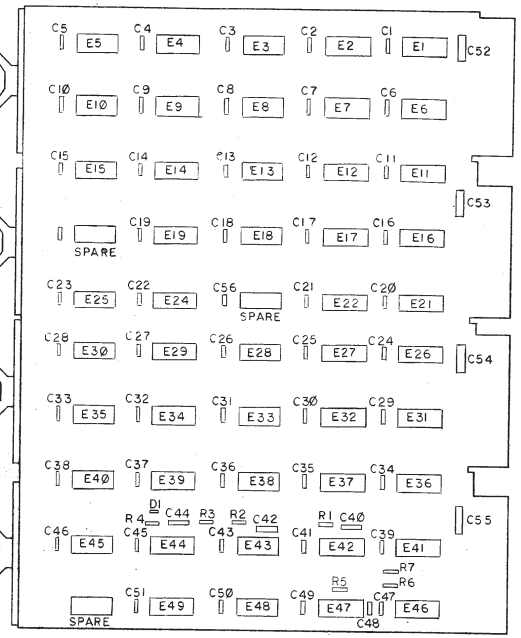

PIN NOMENCLATURE

MODULE	PROCESSOR
A	C
B	D
C	E
D	F

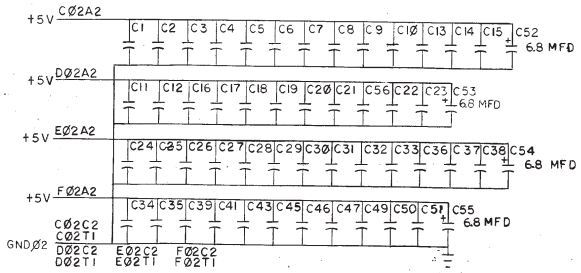

REVISIONS				
CHANGE NO.	CHK		REV	
M727-00001		J. O'LOUGHLIN 7-8-70	B	
M727-00002		J. O'LOUGHLIN 7-22-70	C	
M727-00003		J. O'LOUGHLIN 4/23/70	D	
M727-00005		J. O'LOUGHLIN 6/24/70		
		J. O'LOUGHLIN 7-24-70		

DEC FORM NO. DRD 102A

FIRST USED ON OPTION MODEL: PDP 11

UNLESS OTHERWISE SPECIFIED

UNLESS OTHERWISE SPECIFIED DIMENSION IN INCHES TOLERANCES DECIMALS ± .005 FRACTIONS ± 1/64 ANGLES ± 0°30' FINAL SURFACE QUALITY REMOVE BURRS AND BREAK SHARP CORNERS

MATERIAL —

FINISH —

QTY.	DESCRIPTION	PART NO.	ITEM NO.

PARTS LIST

DRN.		DATE 6-28-70
CHKD.		DATE 3/2/70
ENG.		DATE 3-6-70
PROJ. ENG.		DATE 3-6-70
PROD.		DATE

NEXT HIGHER ASSY A-ML-KA11-0

SCALE —

SHEET 1 OF 3

digital EQUIPMENT CORPORATION MAYNARD MASSACHUSETTS

TITLE STATE CNTL

M727 K2-1

SIZE	CODE	NUMBER	REV.
D	CS	M727-0-1	E

ETCH REV B C D

DIST.

This drawing and specifications, herein, are the property of Digital Equipment Corporation and shall not be reproduced or copied or used in whole or in part as the basis for the manufacture or sale of items without written permission.

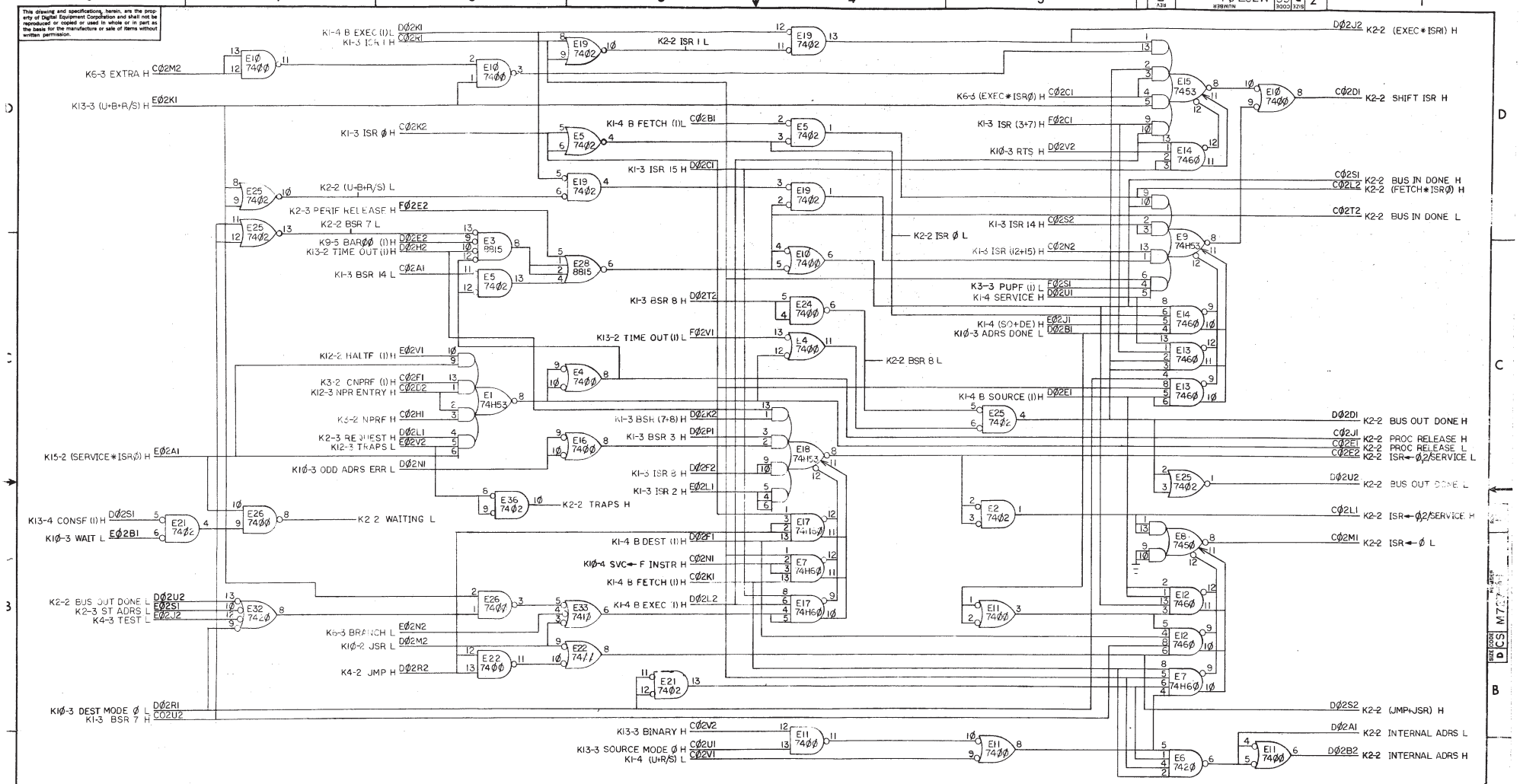

FIRST USED ON OPTION/MODEL	QTY.	DESCRIPTION	PART NO.	ITEM NO.
PDP11		PARTS LIST		

UNLESS OTHERWISE SPECIFIED

UNLESS OTHERWISE SPECIFIED
DIMENSION IN INCHES
TOLERANCES
DECIMALS ± .005 FRACTIONS ± 1/64 ANGLES ± 0°30'
FINAL SURFACE QUALITY
REMOVE BURRS AND BREAK SHARP CORNERS

MATERIAL

FINISH

DRN.	J. Rudas	DATE 12-5-69
CHK'D.		DATE 3/15/70
ENG.		DATE 3-5-70
PROJ. ENG.		DATE 3-5-70
PROD.		DATE

NEXT HIGHER ASSEMBLY: A-ML-KA11-Ø

SCALE NONE

SHEET 2 OF 3

digital EQUIPMENT CORPORATION MAYNARD MASSACHUSETTS

TITLE: STATE CNTL

M727 K2-2

SIZE	CODE	NUMBER	REV.
D	CS	M727-Ø-1	E

DIST.

REVISIONS: REV. | CHANGE NO. | CHK

DEC FORM NO. DRD 102A

This drawing and specifications, herein, are the property of Digital Equipment Corporation and shall not be reproduced or copied or used in whole or in part as the basis for the manufacture or sale of items without written permission.

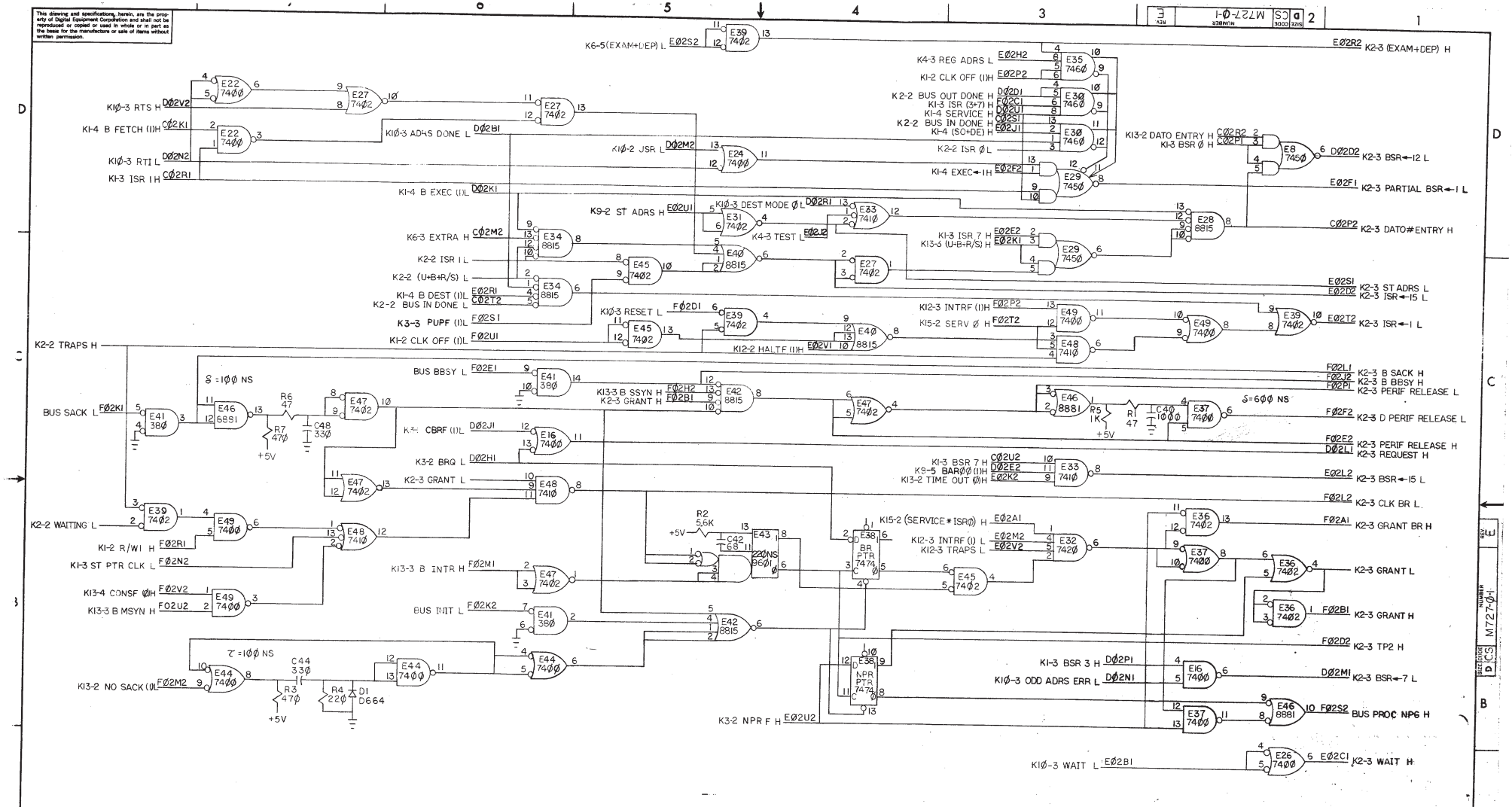

FIRST USED ON OPTION/MODEL	QTY.	DESCRIPTION	PART NO.	ITEM NO.
PDP11		PARTS LIST		

UNLESS OTHERWISE SPECIFIED

UNLESS OTHERWISE SPECIFIED
DIMENSION IN INCHES
TOLERANCES
DECIMALS ± .005 FRACTIONS ± 1/64 ANGLES ± 0°30'
FINAL SURFACE QUALITY ✓
REMOVE BURRS AND BREAK SHARP CORNERS

MATERIAL —

FINISH —

DRN.		DATE 12-9-69
CHKD.		DATE 3/8/70
ENG.		DATE 3-5-70
PROJ. ENG.		DATE 3-5-70
PROD.		DATE

NEXT HIGHER ASSEMBLY A-ML-KA11-Ø

SCALE NONE

SHEET 3 OF 3

digital EQUIPMENT CORPORATION MAYNARD, MASSACHUSETTS

TITLE STATE CNTL

M727 K2-3

SIZE	CODE	NUMBER	REV.
D	CS	M727-Ø-1	E

DIST.

REVISIONS: REV. / CHANGE NO. / CHK

DEC FORM NO DRD 102A