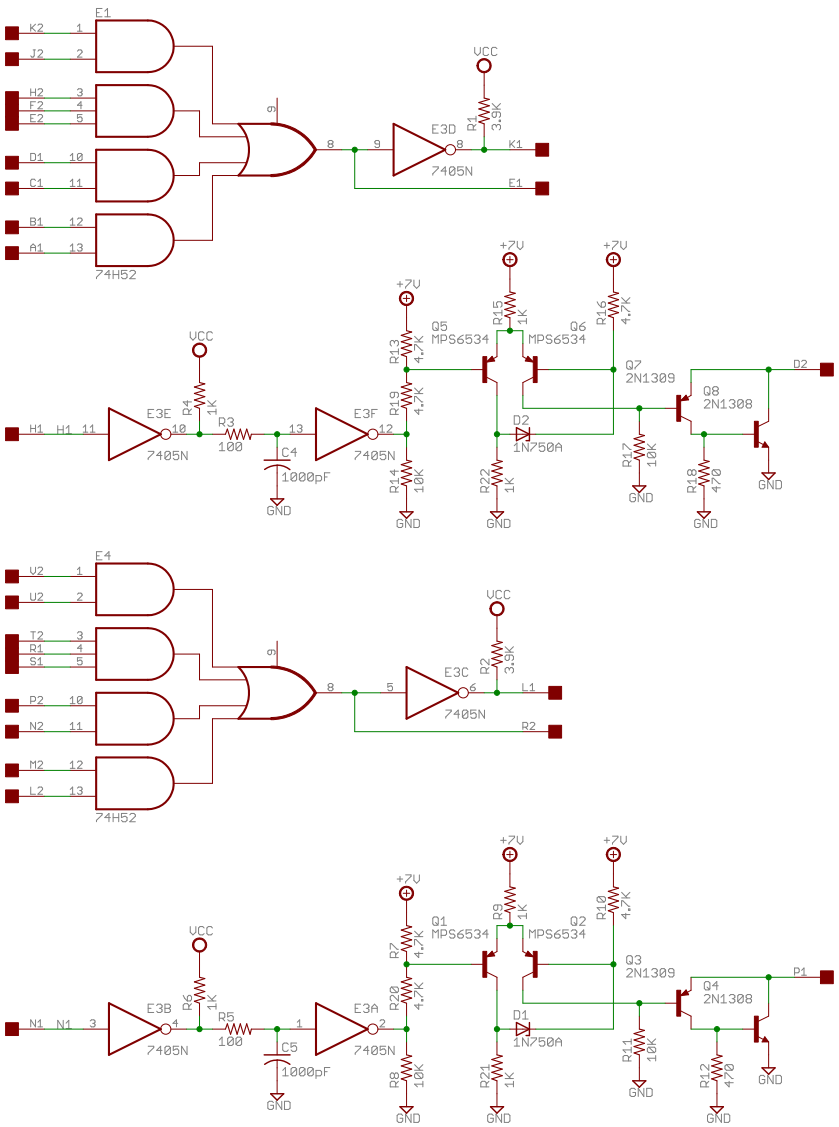

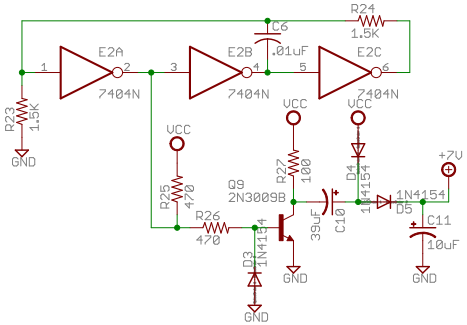

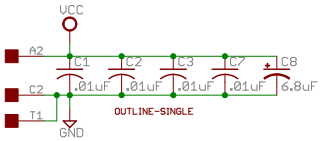

Unibus Pwer Fail Drivers

TITLE: M668X

Document Number: D-CS-M688-0-1

REV: E

Date: 2/1/2017 2:42:14 PM

Sheet: 1/1