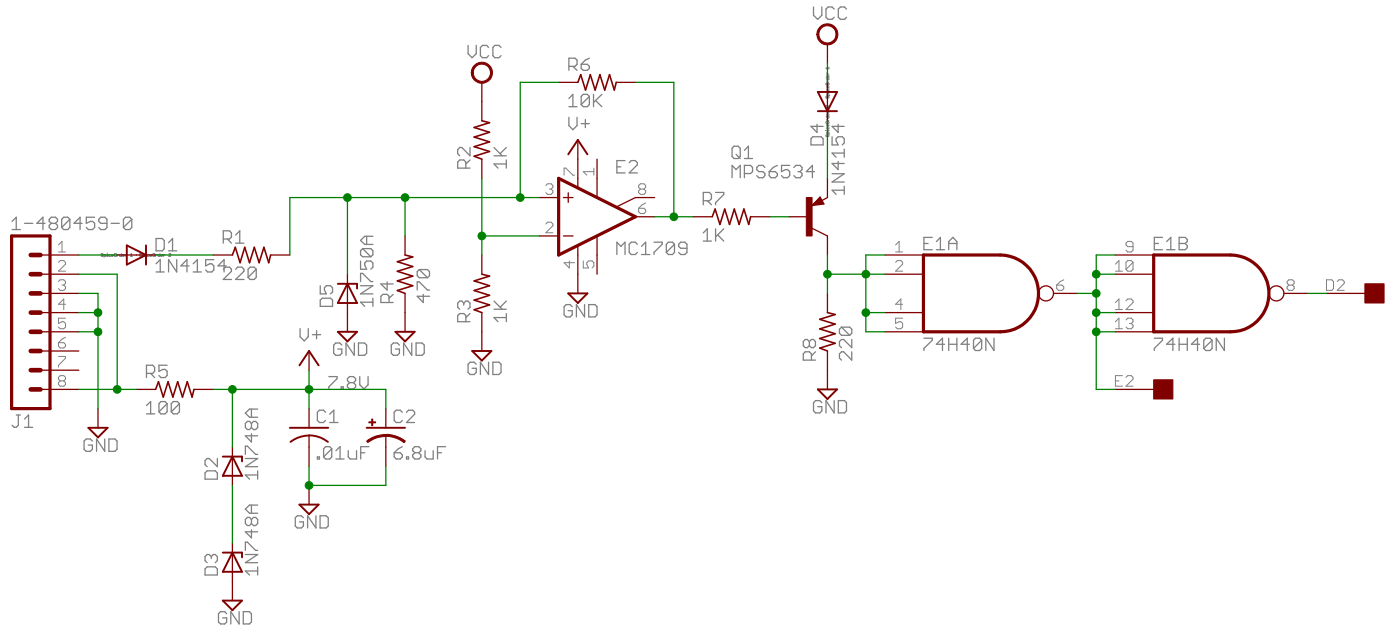

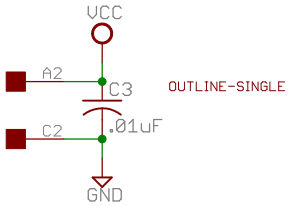

Real Time Clock M515

TITLE: M515X

Document Number: B-CS-M515-0-1

REV: D

Date: 1/27/2017 4:12:48 PM

Sheet: 1/1